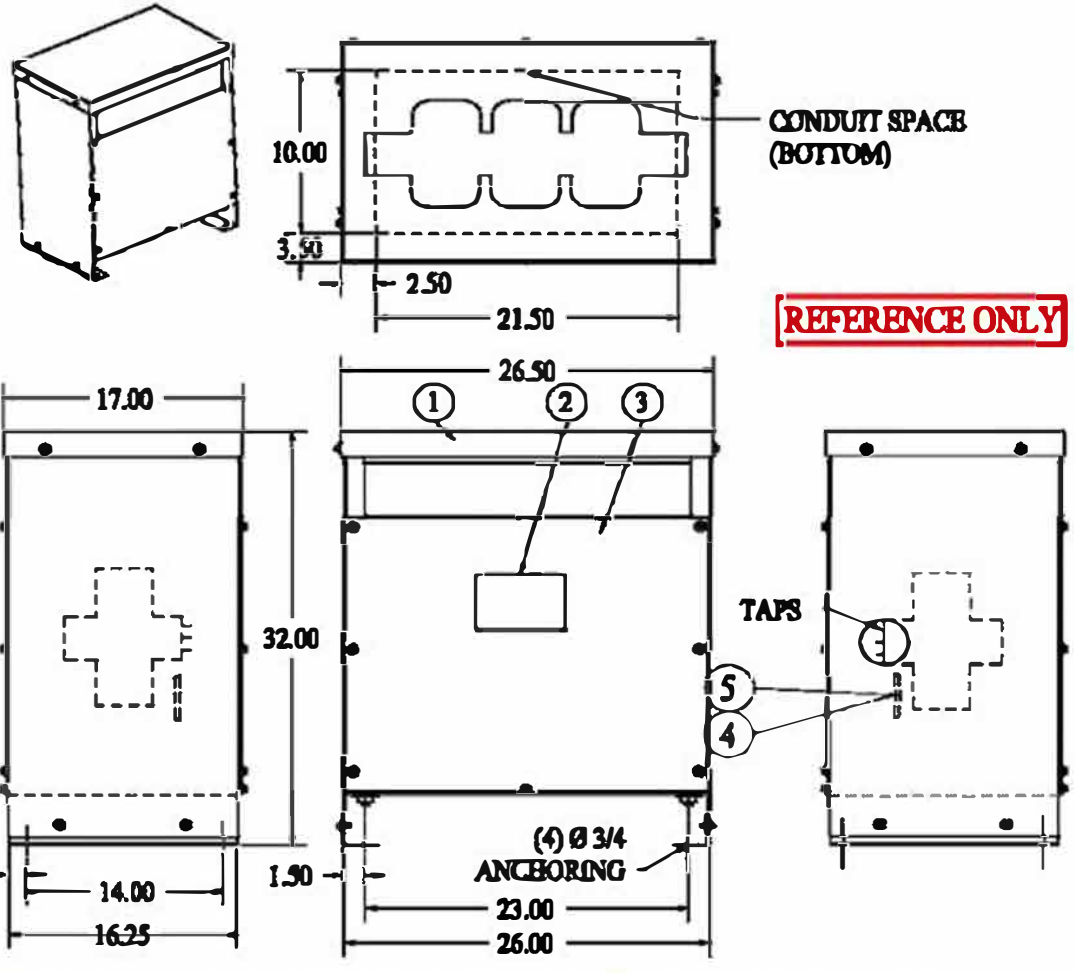

Parts List		
ITEM	QTY	DESCRIPTION
1	1	TOP COVER - REMOVABLE
2	1	DIAGRAMATIC NAMEPLATE
3	2	FRONT & REAR PANEL - REMOVABLE
4	3	HV TERMINAL
5	4	LV TERMINAL

U.S. DEPARTMENT OF ENERGY
DOE 2016 COMPLIANT

HT30A3K2-D16

S.O. NO:
DWG FOR: ☐ RECORD ☐ APPROVAL ☑ QUOTE

CUST/JOB NAME:
CUST ORDER NO:
SERIAL NO:
ID TAG:

KVA: 30
HIGH VOLTAGE: 480D
LOW VOLTAGE: 240D/120CT
HV TAPS: 2A4B 2-1/2%
HV-KV BIL: 10
LV-KV BIL: 10
PHASE: ☐ SINGLE ☑ THREE
FREQ-HZ: ☑ 60 ☐ 50
TEMP RISE - °C: ☑ 150 ☐ 115 ☐ 80
COOLING CLASS: AA
WINDING COND: ☑ ALUMINUM ☐ COPPER
PAINT/COATING: ANSI 61 LIGHT GRAY
APPRX WT - LBS: 349

☐ STANDARD ☑ DOE 2016 ☐ K4 ☐ K13 ☐ K20

NOTES:
1) THIS DRAWING IS NOT FOR CONSTRUCTION PURPOSES. VERIFY WITH FACTORY BEFORE CONSTRUCTION.
2) TRANSFORMERS ARE MANUFACTURED AND TESTED PER APPLICABLE ANSI, NEMA, AND IEEE STANDARDS.
3) UNLESS OTHERWISE SPECIFIED ALL DIMENSIONS ARE IN INCHES WITH ± ¼" TOLERANCE.
4) TRANSFORMER IS UL & CSA LISTED AND LABLED.
5) UNIT IS DESIGNED FOR INDOOR (NEMA1) AND OUTDOOR (NEMA3R) APPLICATION.

		SCALE : N/A	PAGE 1 OF 1	3PH, 600V GENERAL PURPOSE DRY TYPE TRANSFORMER OUTLINE, CASE B (CASE 2)	
		CADD:			
		CHKD:		MGM TRANSFORMERS BY FORGENT	CAD NO. REV:
REVISIONS		APPD:			