TOP VIEW

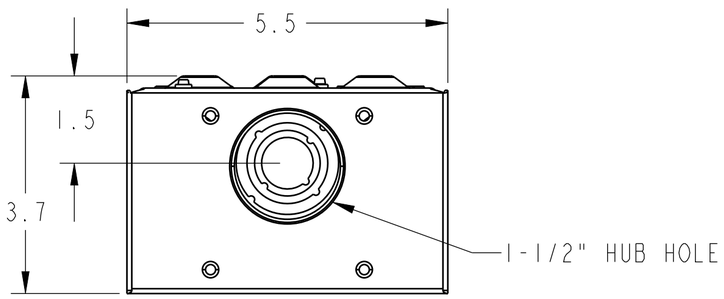

FRONT VIEW
INSIDE COVER

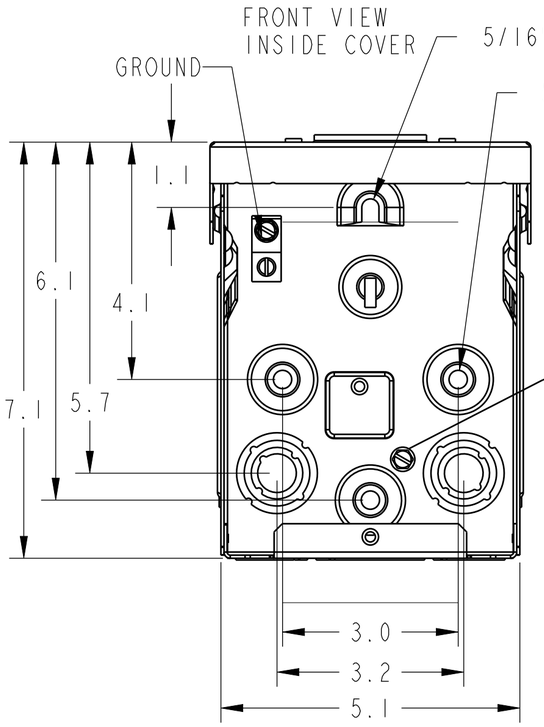

SCALE 0.500

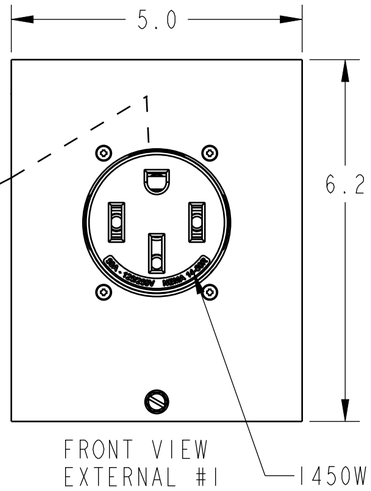

FRONT VIEW
EXTERNAL #1

1450W
50 AMP.
RECEPTACLE

SIDE VIEW

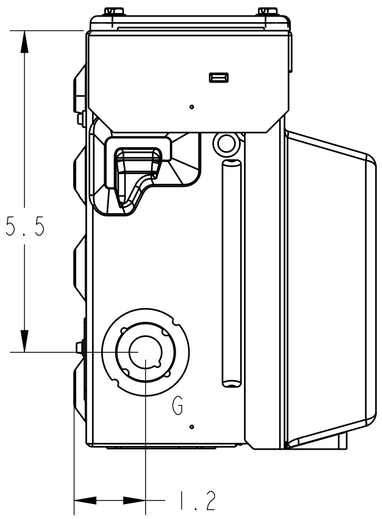

FRONT VIEW
EXTERNAL #2

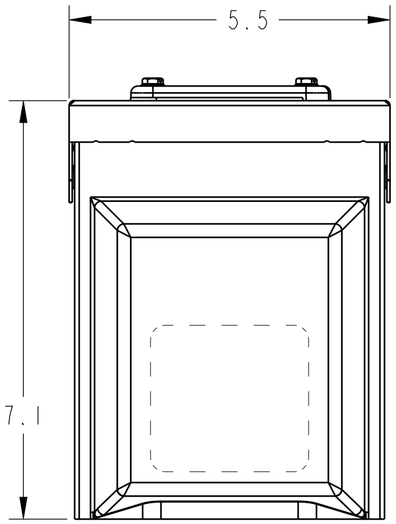

SIDE VIEW

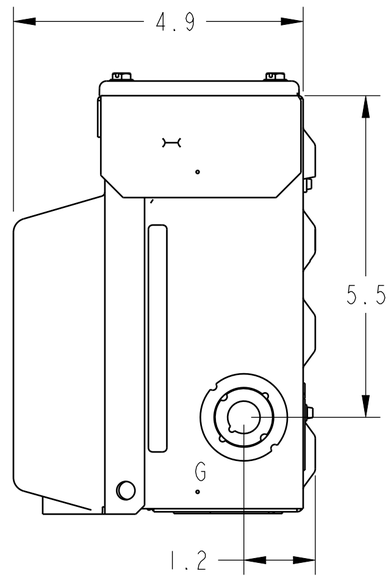

SCALE 0.500

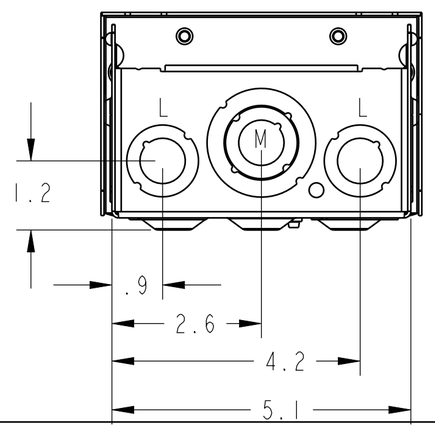

KNOCKOUT TABLE:

L= 1/2", 3/4" KO
M=1/2", 3/4", 1", 1-1/4" KO
G= 1/2", 3/4", 1" KO

WIRE RANGE TABLE:

CONNECTOR	COPPER		ALUMINUM	
	SOLID	STRAND	SOLID	STRAND
LINE	8	8	--	--
LOAD	--	--	--	--
NEUTRAL	8	8	--	--
EQUIP. GRND	12-8	12-2	--	--

Midwest Electric Products

TITLE

50A 14-50EVWR SURFACE UNMETERED

SIZE	MODEL	REV
C	U054EV	C

SCALE: 0.333 | SHEET 1 OF 1