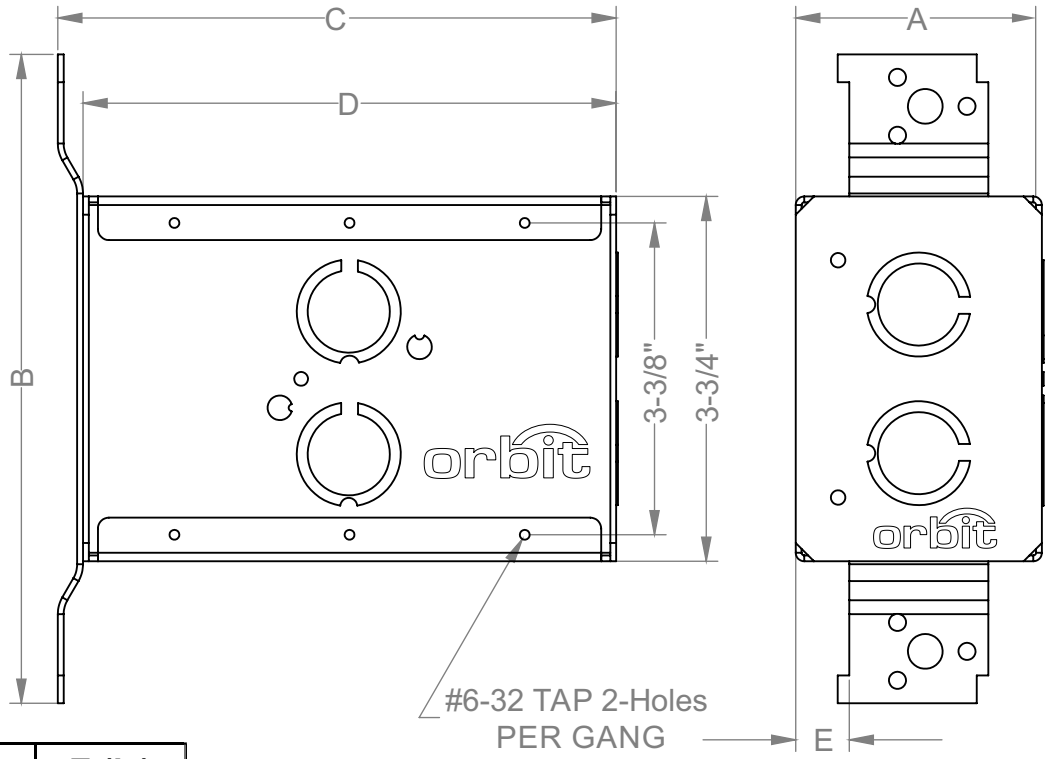

Part No.	A (in)	B (in)	C (in)	D (in)	E (in)
MSB-3-FB	2-1/2	7-3/8	5-3/4	5-1/2	3/8
MSB-4-FB	2-1/2	7-3/8	7-5/8	7-3/8	3/8
MSB-5-FB	2-1/2	7-3/8	9-3/8	9-1/8	3/8
MSBG-1	2-1/2	-	-	1-7/8	-
MSB-1	2-1/2	-	-	1-7/8	-
MSB-2	2-1/2	-	-	3-3/4	-
MSB-3	2-1/2	-	-	5-1/2	-
MSB-4	2-1/2	-	-	7-3/8	-
MSB-5	2-1/2	-	-	9-1/8	-
MSB-6	2-1/2	-	-	11	-
MBG-1	3-1/2	-	-	1-7/8	-
MB-1	3-1/2	-	-	1-7/8	-
MB-2	3-1/2	-	-	3-3/4	-
MB-3	3-1/2	-	-	5-1/2	-
MB-4	3-1/2	-	-	7-3/8	-
MB-5	3-1/2	-	-	9-1/8	-
MB-6	3-1/2	-	-	11	-

RoHS

c UL us

orbit

DISCLAIMER

THIS DATA SHEET IS FOR REFERENCE ONLY. ORBIT INDUSTRIES INC RESERVES THE RIGHT TO MAKE CHANGES TO THE DESIGN WITHOUT PRIOR NOTICE

PROPRIETARY AND CONFIDENTIAL

THE INFORMATION CONTAINED IN THIS DRAWING IS THE SOLE PROPERTY OF ORBIT INDUSTRIES INC
ANY REPRODUCTION IN PART OR AS A WHOLE WITHOUT THE WRITTEN PERMISSION OF ORBIT INDUSTRIES INC IS PROHIBITED.

Orbit Industries, Inc.

TITLE:

MASONRY BOXES

DWG. NO. A010LD

REV A

DO NOT SCALE THE DRAWING

5 4 3 2 1