SAFETY INSTRUCTIONS

Heavy Duty Safety Switch

Doc.no. 1SQC920080M0201



ar	تحذير: جهد كهربائي خطر! راجع تعليمات التشغيل. افصل الكهرباء وقم بتأمينها قبل العمل في هذا الجهاز تنبيه! يجب عدم التركيب إلا من خلال شخص على دراية بمجال التقنية الكهربائية .
bg	Предупреждение: Опасно напрежение! Вижте инструкциите за работа. Изключете и блокирайте захранването преди. да работите с устройството. Внимание! Да се монтира само от експерт електротехник.
cs	Varování: Nebezpečné napětí! Viz návod k obsluze. Před zahájením prací na tomto zařízení odpojte a uzamkněte napájení. Pozor! Toto zařízení smí instalovat pouze osoba s elektrotechnickou odborností.
da	Advarsel: Farlig elektrisk spænding! Se installationsinstruktioner. Frakobl enheden, og afbryd strømforsyningen, før du arbejder med denne enhed. Giv agt! Installation må kun foretages af personer med elektroteknisk ekspertise.
de	Warnung: Gefährliche Spannung! Siehe Installationsanleitung. Vor dem Arbeiten Gerät ausschalten und von der Spannungsversorgung trennen. Achtung! Installation nur durch elektrotechnische Fachkraft.
el	Προειδοποίηση: Επικίνδυνη τάση! Ανατρέξτε στις οδηγίες λειτουργίας. Αποσυνδέστε και απομονώστε την παροχή ισχύος προτού ξε κινήσετε τις εργασίες σε αυτήν τη συσκευή. Προσοχή! Η εγκατάσταση πρέπει να γίνεται μόνο από αδειούχο ηλεκτρολόγο εγκαταστάτη.
en	Warning: Hazardous voltage! Refer to installation instructions. Disconnect and lock out power before working on this device. Attention! Installation by person with electrotechnical expertise only.
es	Advertencia: ¡Tensión peligrosa! Consulte las instrucciones de instalación. Antes de trabajar con este dispositivo, desconecte y bloquee la corriente. ¡Atención! La instalación debe ser realizada únicamente por un técnico electricista.
et	Hoiatus: Elektrilöögi oht! Lisateavet vaadake kasutusjuhendist. Enne selle seadmega töötamist ühendage lahti ja lukustage toide. Tähelepanu! Seadet tohib paigaldada ainult elektrotehnilise kogemusega isik.
fi	Varoitus: Vaarallinen jännite! Katso asennusohje. atkaise virta ja estä virran kytkeminen lukituksella ennen töiden aloittamista. Huomio! Asennuksen saa suorittaa vain henkilö, jolla on kokemusta sähkötekniikasta.
fr	Avertissement: Tension dangereuse! Consultez les consignes d'installation. Débranchez et verrouillez l'alimentation électrique avant d'entreprendre des travaux sur cet appareil. Attention! L'installation doit être effectuée uniquement par une personne ayant une expertise en électrotechnique.
hr	Upozorenje: Opasan napon! Pogledajte upute za ugradnju. Odspojite i isključite struju prije rada na ovom uređaju. Pažnja! Ugradnja je dopuštena samo osobama stručnim u području elektrotehnike.
hu	Figyelmeztetés: Veszélyes feszültség! Lásd a használati utasítást. Válassza le és zárja ki az áramellátást, mielőtt a berendezésen dolgozni kezd. Figyelem! Az üzembe helyezést csak elektrotechnikai szakértelemmel rendelkező személy végezheti el.
it	Attenzione: Tensione pericolosa! Fare riferimento alle istruzioni per l'uso. Prima di intervenire su questo dispositivo, scollegare e isolare tutte le fonti di alimentazione. Attenzione! L'installazione deve essere eseguita esclusivamente da un installatore qualificato.
lt	Įspėjimas: Pavojinga įtampa! Žr. naudojimo instrukcijas. Atjunkite ir laikinai užblokuokite maitinimą prieš dirbdami su šiuo įrenginiu. Dėmesio! Įrengti gali tik asmuo, turintis elektrotechniko patirties.
lv	Brīdinājums: Bīstams spriegums! Skatiet darba norādījumus. Pirms sākat darbu ar šo ierīci, atvienojiet un bloķējiet strāvas padevi. Uzmanību! Uzstādīšanu drīkst veikt tikai persona ar zināšanām par elektrotehniku.
nl	Waarschuwing: Gevaarlijke spanning! Raadpleeg de installatie-instructies. Koppel dit apparaat los van de stroomvoorziening voordat u werkzaamheden uitvoert. Let op! Installatie mag alleen worden uitgevoerd door een monteur met elektrotechnische expertise.
no	Advarsel: Farlig spenning! Se i bruksanvisningen. Koble fra og steng av strømmen før du arbeider på denne enheten. Forsiktig! Montering skal kun utføres av kvalifiserte personer med elektrokompetanse.
pl	Ostrzeżenie: Niebezpieczne napięcie! Patrz: instrukcja instalacji. Przed rozpoczęciem wykonywania pracy z tym urządzeniem odłącz i zablokuj zasilanie. Uwaga! Montaż może wykonywać wyłącznie osoba posiadająca doświadczenie elektrotechniczne.
pt	Aviso: Tensão perigosa! Consulte as instruções de instalação. Desconecte e desligue a energia elétrica antes de trabalhar nesse dispositivo. Atenção! A instalação deve ser feita apenas por uma pessoa com especialidade eletrotécnica.
ro	Avertisment: Tensiune electrică periculoasă! Consultați instrucțiunile de utilizare. Deconectați și închideți sursa de energie înainte de a lucra cu acest dispozitiv. Atenție! Instalarea trebuie realizată doar de către o persoană cu expertiză electrotehnică.
ru	Предупреждение: Опасное электрическое напряжение! Обратитесь к инструкциям по монтажу. Отключите электропитание и обеспечьте безопасность перед началом работ. Внимание! Монтаж должен выполняться только специалистом по электротехническим работам.
sk	Výstraha: Nebezpečné napätie! Pozrite si návod na použitie. Pred začatím prác na tomto zariadení odpojte a zablokujte napájanie. Pozor! Inštaláciu smie vykonávať len osoba s odbornými znalosťami v oblasti elektrotechniky.
sl	Opozorilo: Nevarna napetost! Glejte navodila za uporabo. Pred delom na tej napravi izklopite in zaklenite električno napajanje. Pozor! Namestitev sme izvesti samo elektrotehnični strokovnjak.
sv	Varning: Livsfarlig spänning! Se i bruksanvisningen. Frånkoppla och blockera anläggning eller en anläggningsdel innan arbete utförs. Obs! Får endast installeras av behörig elektriker.
tr	Uyarı: Tehlikeli gerilim! Montaj talimatlarına bakın. Bu cihaz üzerinde çalışmadan önce elektriği kesin ve kilitleyin. Dikkat! Yalnızca elektroteknik uzmanlığa sahip kişiler tarafından kurulabilir.
zh	警告：高压危险! 请参见操作手册。操作本设备前请断开并锁定电源。注意！安装仅限专业电工人员。

Disclaimer
The information presented in this publication does not form part of any quotation or contract, is believed to be accurate and reliable and may be changed without notice. No liability will be accepted by the publisher for any consequences of its use. Publication thereof does not convey nor imply any license under patent - or other industrial or intellectual - property rights.

Target Audience
This document is intended for ABB customers and for professional recyclers.

Packaging
You can recycle all packging materials. To avoid pollution caused by unnecessary transportation, the factory doesnot take back used packages. Contact your local ABB office for package recycling instructions if needed. ABB recommends package recycling as it preserves raw materials and reduces waste being landfilled.

Product manuals and sales brochures
To save natural resources and reduce paper waste, all product manuals are available in ABB Library and on the Internet.

Disposal
The main parts of the safety switch can be recycled to preserve natural resources and energy. Product parts and materials should be dismantled and separated. Generally all metals, such as steel, aluminium, copper and its alloys, and precious metals can be recycled as material. Plastics, rubber, cardboard and other packaging material can be used in energy recovery.

To aid recycling, plastic parts are marked with an appropriate identification code. Contact your local ABB distributor for further information on environmental aspects. End of life treatment must follow international and national regulations.

Switch Interior & Mechanism

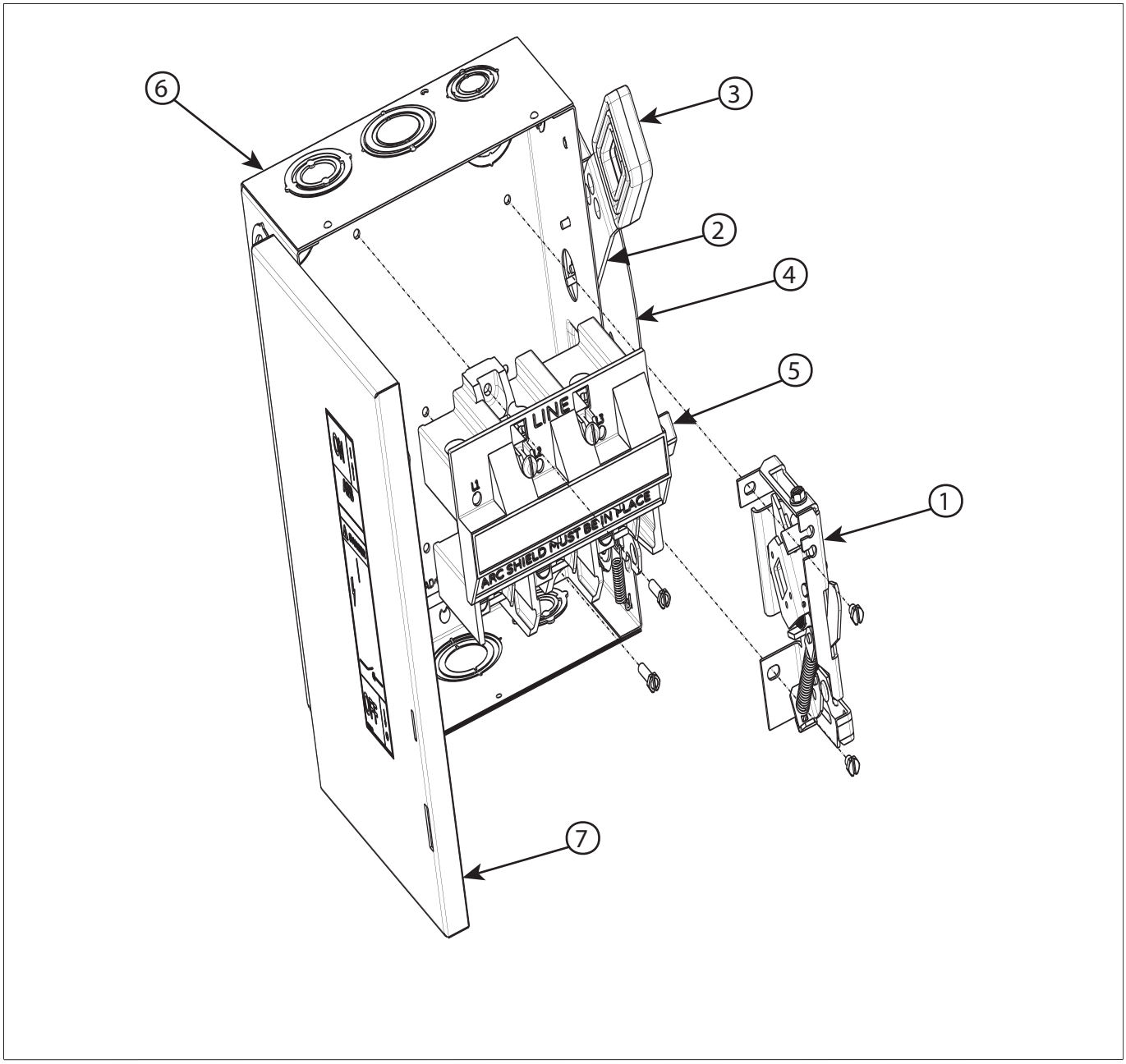

NUMBER	PARTS	CATEGORY	MATERIALS
1	HANDLE MECHANISM ASM	METAL	STEEL
2	HANDLE	METAL	STEEL
3	HANDLE GRIP	PLASTIC	PLASTIC
4	HANDLE POUCH	METAL	STEEL
5	SWITCH BASE ASM	ELECTRICAL	PLASTIC, COPPER OR ALUMINIUM
6	BOX	METAL	STEEL
7	DOOR	METAL	STEEL

Switch Interior Parts

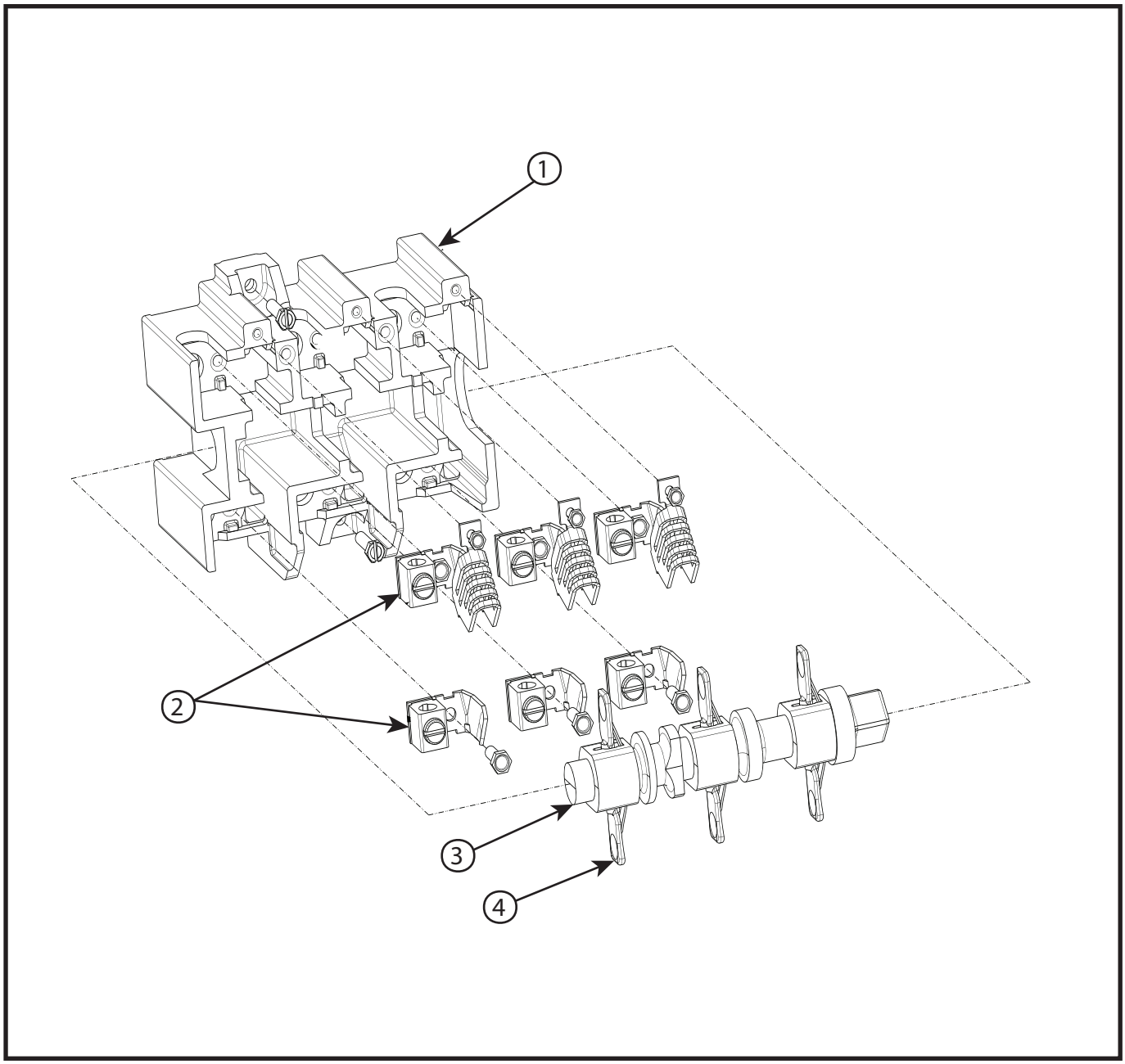

NUMBER	PARTS	CATEGORY	MATERIALS
1	SWITCH BASE	PLASTIC	PLASTIC
2	LUGS	METAL	ALUMINIUM
3	ROTOR	PLASTIC	PLASTIC
4	BLADE	METAL	COPPER

*Separate disassembly guides should be referenced for breaker devices.

Switch Interior & Mechanism

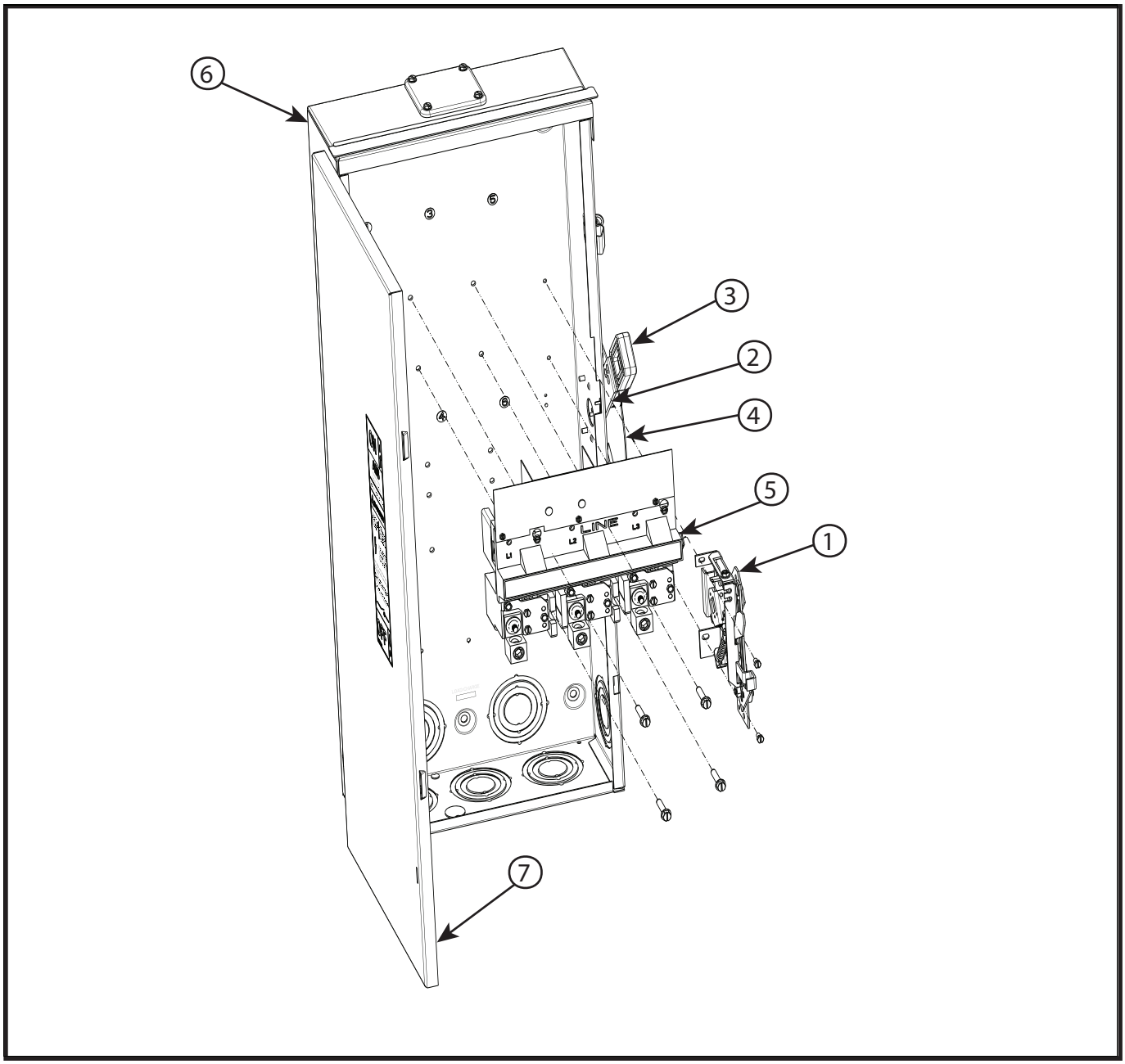

NUMBER	PARTS	CATEGORY	MATERIALS
1	HANDLE MECHANISM ASM	METAL	STEEL
2	HANDLE	METAL	STEEL
3	HANDLE GRIP	PLASTIC	PLASTIC
4	HANDLE POUCH	METAL	STEEL
5	SWITCH BASE ASM	ELECTRICAL	PLASTIC, COPPER OR ALUMINIUM
6	BOX	METAL	STEEL
7	DOOR	METAL	STEEL

Switch Interior Parts

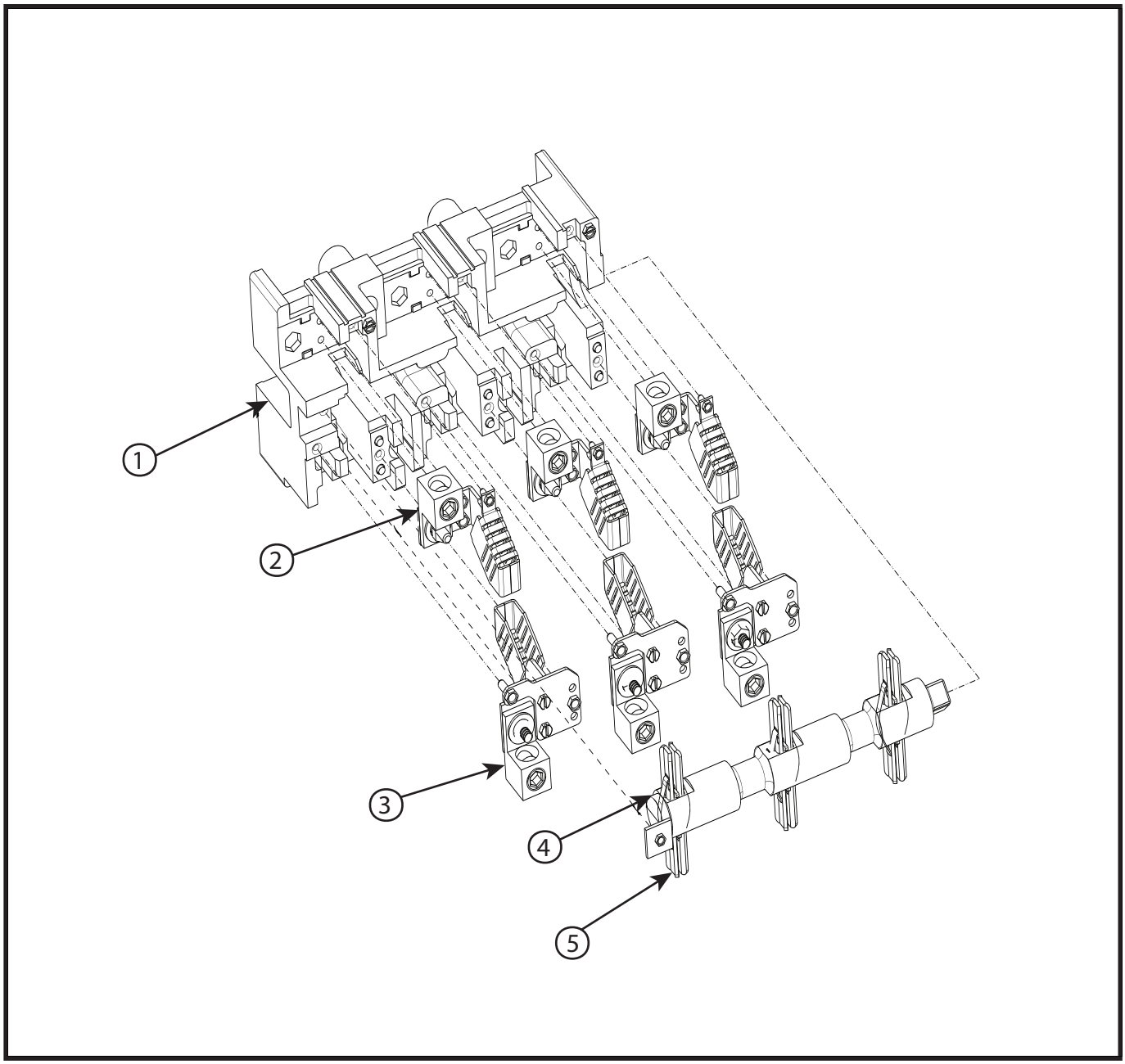

NUMBER	PARTS	CATEGORY	MATERIALS
1	SWITCH BASE	PLASTIC	PLASTIC
2	LUGS	METAL	ALUMINIUM
3	LUGS	METAL	ALUMINIUM
4	ROTOR	PLASTIC	PLASTIC
5	BLADES	METAL	COPPER

ABB Inc.
305 Gregson Drive
Cary, NC 27511 US

Revision
A

Revision date
9/10/2024

Document number
1SQC920080M0201

© Copyright 2024 ABB.
All rights reserved.
Specifications subject
to change without notice.