CAD32−50A / LC1D09−32A

www.se.com/support

PLEASE NOTE
- Electrical equipment should be installed, operated, serviced, and maintained only by qualified personnel.
- No responsibility is assumed by Schneider Electric for any consequences arising out of the use of this material.

请注意
- 电气设备的安装、操作、维修和维护工作仅限于合格人员执行。
- Schneider Electric 不承担由于使用本资料所引起的 任何后果。

⚠ ⚠ DANGER / 危险

HAZARD OF ELECTRIC SHOCK, EXPLOSION, OR ARC FLASH
Disconnect all power before servicing equipment.
Failure to follow these instructions will result in death or serious injury.

电击、爆炸或弧闪的危险
在此电力设备 上进行工作时, 请先切断所有电源。
未按说明操作将导致人身伤亡等严重后果。

⚠ WARNING / 警告

HAZARD OF FIRE OR ELECTRIC SHOCK (FOR CONTACTOR WITH HI-FAULT SHORT CIRCUIT CURRENT RATINGS ONLY)
- The opening of the branch-circuit protective device may be an indication that a fault current has been interrupted.
- To reduce the risk of fire or electric shock, current-carrying parts and the other components of the controller should be examined and replaced if damaged.

Failure to follow these instructions can result in death, serious injury, or equipment damage.

可能有火灾或者触电的危险（仅限高故障短路电流额定值的接触器）
- 支路保护设备断开，表明故障电流已被中断。
- 为降低火灾或触电风险，应检查带电部件和 其他控制元件，如有损坏，需及时更换。

未按说明操作可能导致人身伤亡或设备损坏等严重后果。

⚠ **WARNING:** This product can expose you to chemicals including Antimony oxide (Antimony trioxide), which is known to the State of California to cause cancer. For more information go to **www.P65Warnings.ca.gov.**

⚠ **警告:** 本产品会让您接触到包括氧化锑（三氧化二锑）在内的化学物质, 加利福尼亚州已知这些化学物质会导致癌症。有关 更多信息, 请访问 **www.P65Warnings.ca.gov.**

"For motor starting use Schneider Electric TeSys Protect - Deca overload relays."
电动机起动请使用施耐德电气 TeSys 保护 Deca 系列热过载继电器。

3P AC TeSys Deca contactors are grade 3 (LC1D09 -> LC1D18) and grade 2 (LC1D25 -> LC1D38) according to GB 21518.
Maximum power consumption lower than 9.5 VA.
根据 GB 21518 标准，三极 TeSys Deca 系列交流接触器能效等级为 3 级 (LC1D09 -> LC1D18) 和 2 级 (LC1D25 -> LC1D38).
产品最大吸持 功率低于 9.5 VA

A

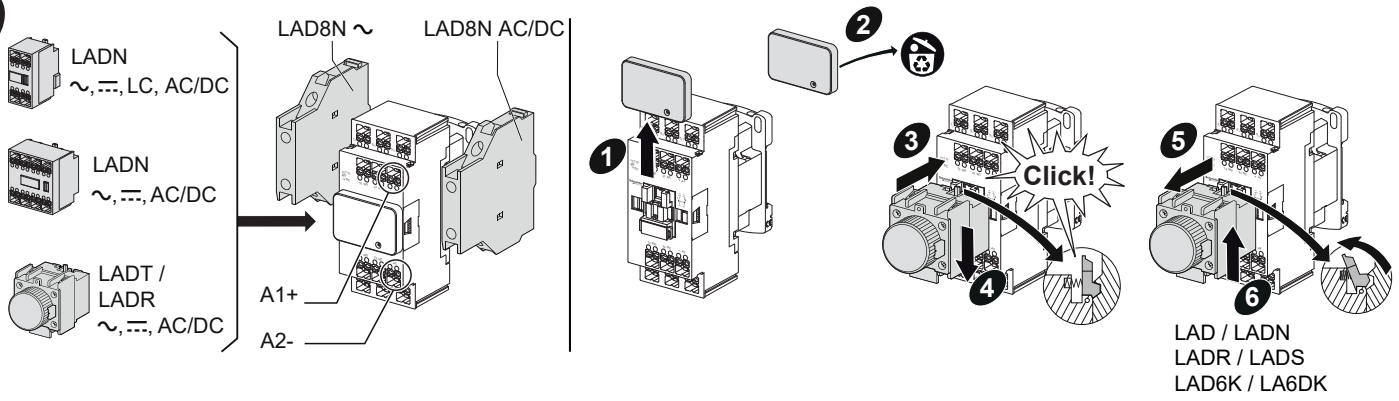

B

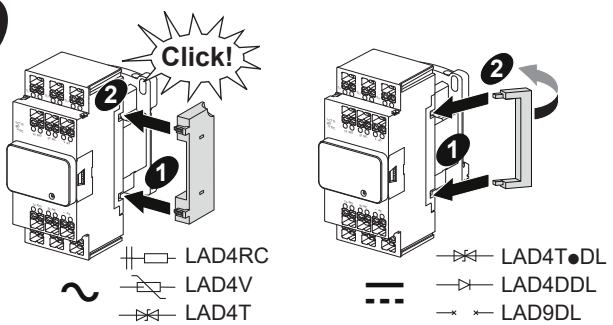

AC/DC
- use of this product in EMC environment B may require mitigation measures to avoid unwanted disturbance.
- full open AC at 10%Us.
- 在 EMC 环境 B 中使用此产品可能需要采取缓解 措施以避免不 必要的干扰。
- 交流情况需在 10%Us 下完全释放。

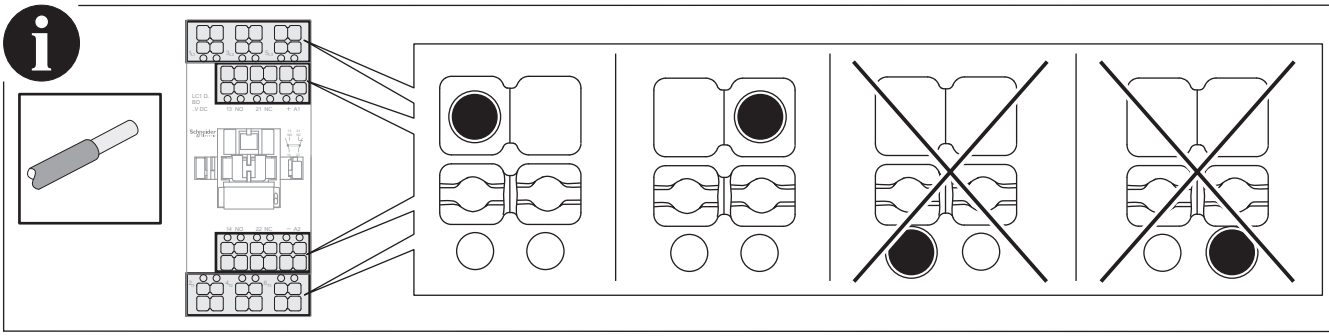

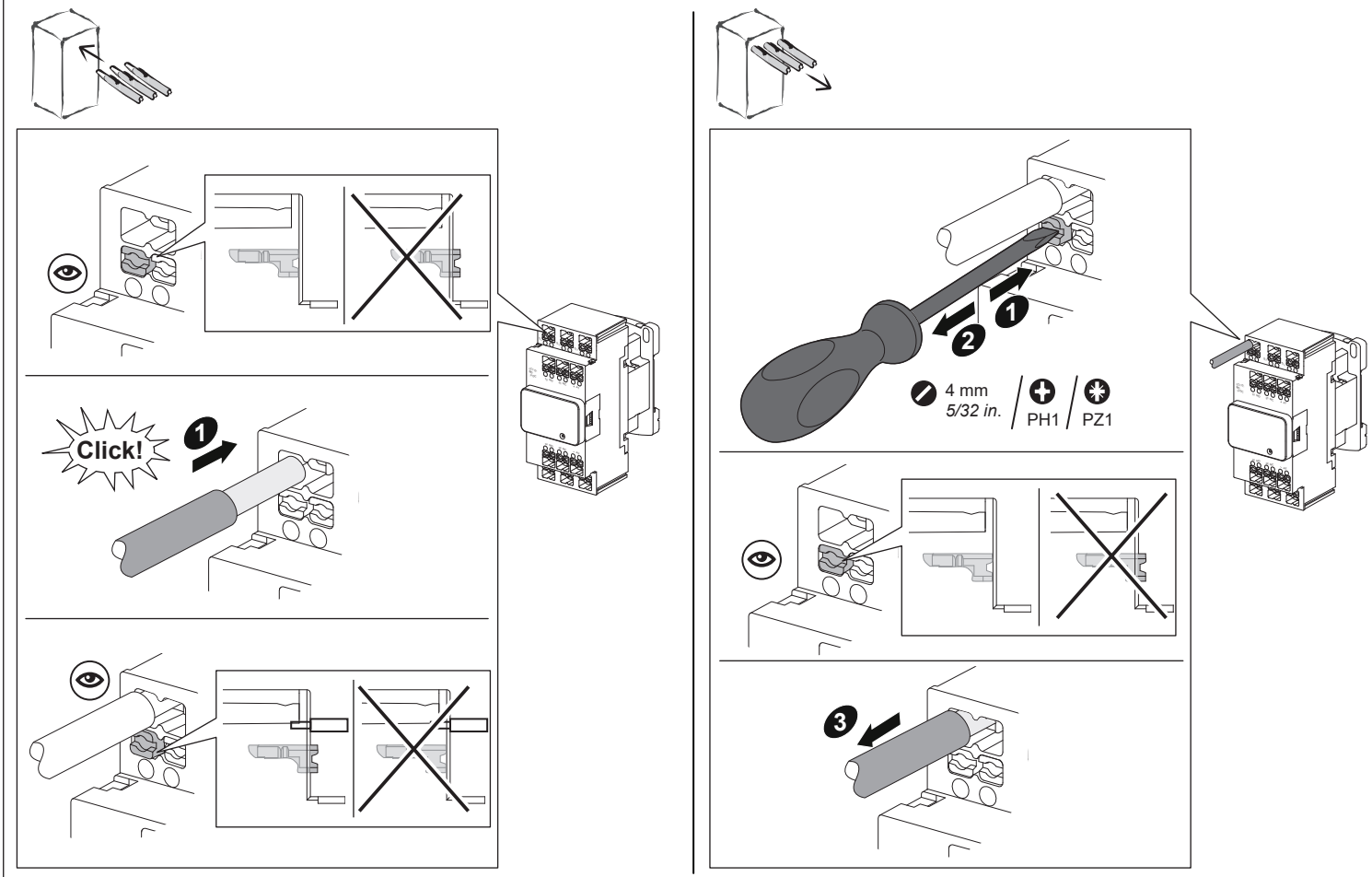

⚠ WARNING / 警告

HAZARD OF FIRE

- Before wiring installation or removal, the pusher must be in not triggered (inside) position.
- After wiring, the pusher must be in triggered (outside) position.

Failure to follow these instructions can result in death, serious injury, or equipment damage.

火灾危险

- 在安装或拆卸线之前，锁扣必须处于未触发（未弹出）位置。
- 接线后，锁扣必须处于触发（弹出）位置。

未按说明操作可能导致人身伤亡或设备损坏等严重后果。

		LC1D09−12A	**LC1D18−32A**	**CAD●●A / LC1D●● / LA●●**
	mm	10	12	10
	in.	*3/16*	*15/32*	*3/16*
	mm²	2x 0.5−4	2x 0.75−6	2x 0.5−4
	AWG (Cu 75°C)	*2x 20−10*	*2x 18−10*	*2x 20−10*
	mm²	2x 0.5−2.5	2x 0.75−4	2x 0.5−2.5
	AWG (Cu 75°C)	*2x 20−12*	*2x 18−10*	*2x 20−12*

D

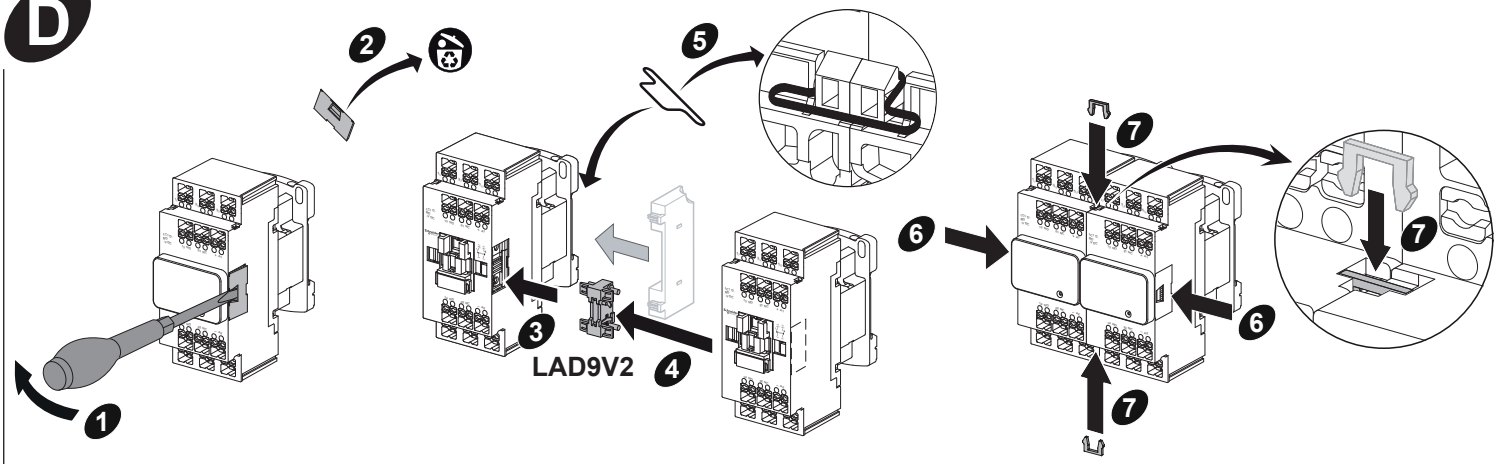

E

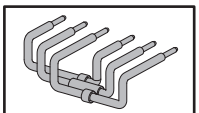

LAD9V19A

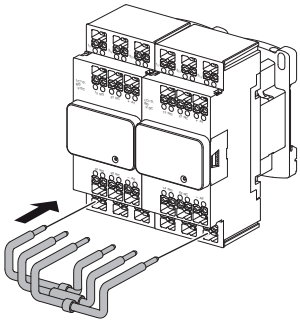

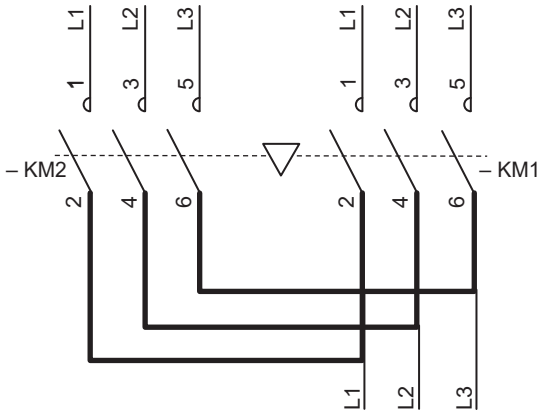

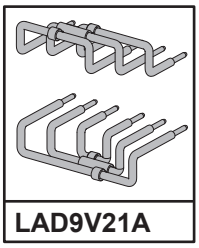

LAD9V21A

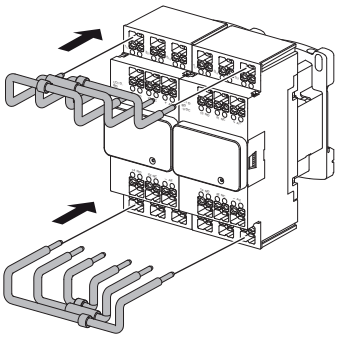

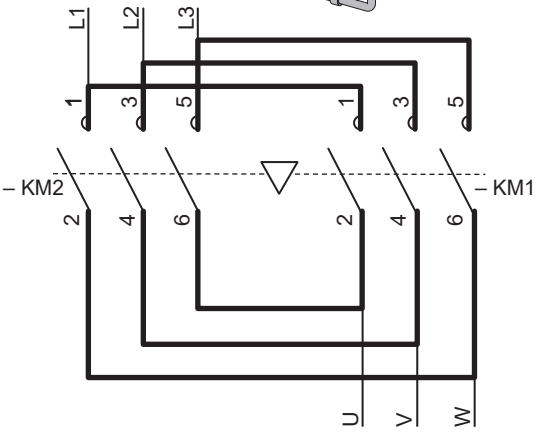

F

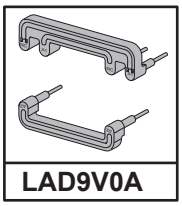

LAD9V0A

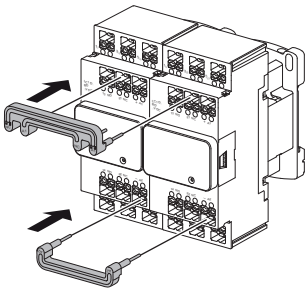

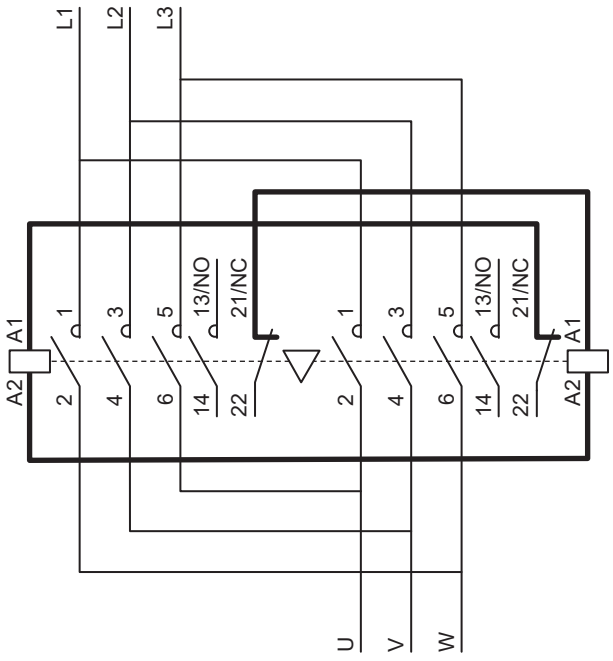

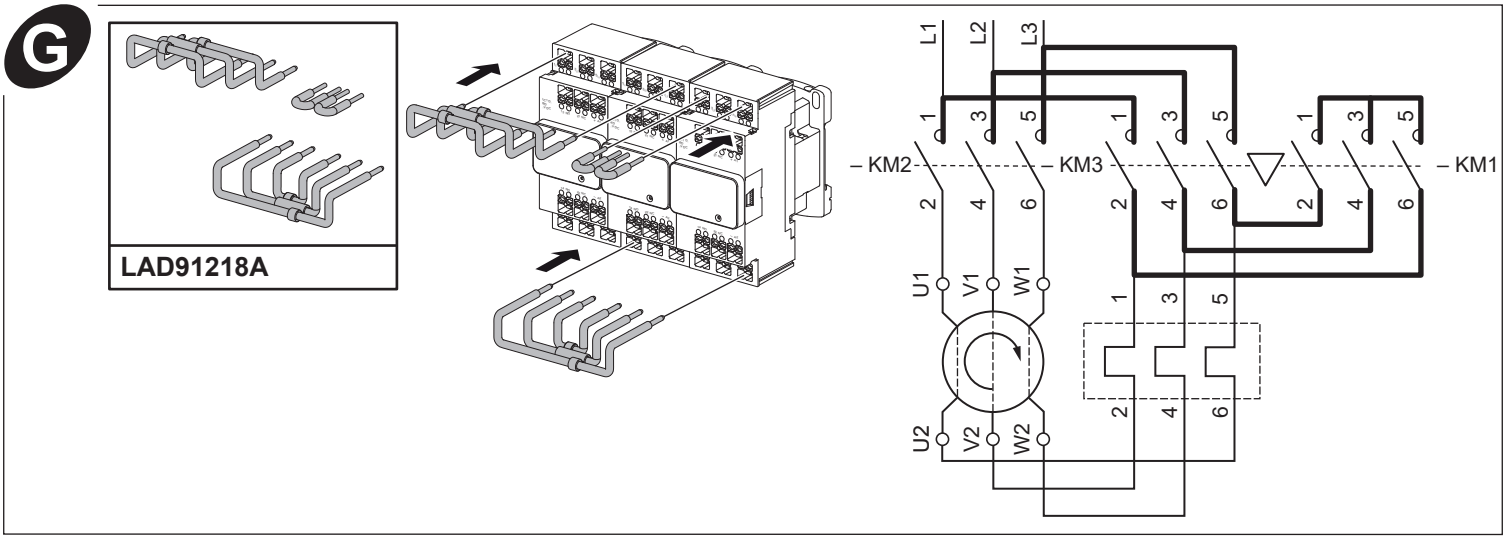

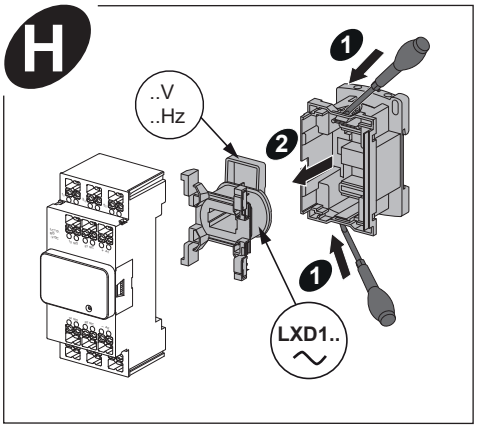

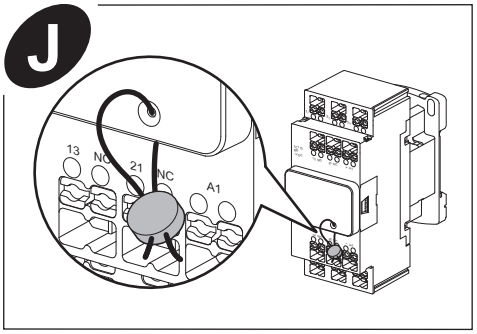

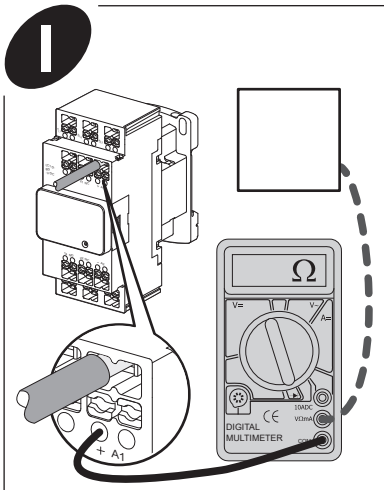

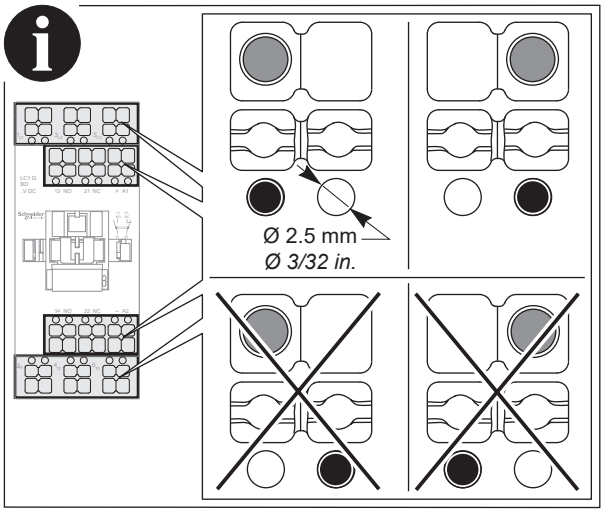

NOTICE / 注意

INCORRECT MEASUREMENT
Always connect the test probe below to the same slot of wiring or busbar.
Failure to follow these instructions can result in incorrect measurement.

测量错误
测试探针必须连接到接线位置正下方的同一插槽。
不遵循这些说明可能会导致测量错误。

cULus Lighting Ratings / cULus 照明电流额定值		
Device / 设备	**Ballast, 600 V / 镇流器**	**Tungsten, 480 Y / 277 V 钨丝灯**
LC1D09	20 A	20 A
LC1D12	25 A	-
LC1D18	32 A	25 A
LC1D25	40 A	40 A

Only applicable for cULus marked products except DC coil.

Definite Purpose ratings, 3 Phase, Load wiring: breaking all lines
Hermetic refrigeration compressor
特定用途额定值，3 相，断开所有线路
封闭式制冷压缩机设备

		LRA		
Device / 设备	**FLA**	**240 V**	**480 V**	**600 V**
LC1D09	9	54	45	36
LC1D12	12	72	60	48
LC1D18	18	108	90	72
LC1D25	25	150	125	100
LC1D32	32	192	160	128

Elevator Duty HP ratings / 电梯专用马力（HP）额定值					
	One Phase / 单相	**Three Phases / 三相**			
	230 V	**200/208 V**	**230 V**	**460 V**	**575 V**
LC1D12	1.5	2	3	7.5	7.5
LC1D18	3	5	5	-	-
LC1D25	3	5	7.5	15	20
LC1D32	5	10	7.5	-	-

Schneider Electric Industries SAS
1884 Boulevard de la Défense
92000 Nanterre
France
www.se.com

Schneider Electric Limited
Stafford Park 5
Telford, TF3 3BL
United Kingdom
www.se.com/uk

© 2026 Schneider Electric - All rights reserved.