Owner's Manual

Spark-Ignited Stationary Generators

Residential and Commercial

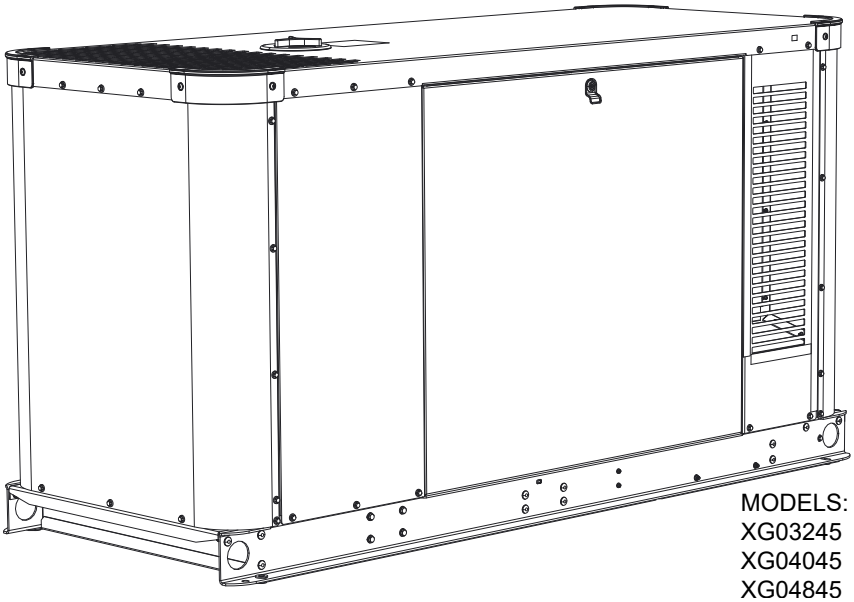

MODELS:
XG03245
XG04045
XG04845

⚠WARNING

Loss of life. This product is not intended to be used in a critical life support application. Failure to adhere to this warning could result in death or serious injury.

(W000209)

Register your Generac product at:
WWW.GENERAC.COM
1-888-GENERAC
(888–436–37722)

SAVE THIS MANUAL FOR FUTURE REFERENCE

Use this page to record important information about the generator.

For quick and easy reference, copy the information printed on the Unit Identification Label onto the sample label printed here. The Unit Identification Label is located on the base frame adjacent to the front engine mount on all models.

Always provide the complete model number and serial number when contacting an Independent Authorized Service Dealer (IASD) about parts and/or service.

Operation and Maintenance: Correct maintenance and care of the unit minimizes operating expenses and errors. It is the operator's responsibility to perform all safety inspections, to verify all maintenance for safe operation is performed promptly, and to have the equipment inspected periodically by an IASD. Normal maintenance, service, and replacement of parts are the responsibility of the owner/operator and are not considered defects in materials or workmanship within the terms of the warranty. Individual operating habits and usage may contribute to the need for additional maintenance or service.

When the generator requires servicing or repairs, Generac recommends contacting an IASD for assistance. Authorized service technicians are factory-trained and are capable of handling all service needs. To locate the nearest IASD, please visit the dealer locator at: ***www.generac.com/Dealer-Locator***.

INDEPENDENT AUTHORIZED SERVICE DEALER LOCATION
To locate the nearest INDEPENDENT AUTHORIZED SERVICE DEALER, please call this number: **1-800-333-1322**
or visit the dealer locator at:
www.generac.com/Service/DealerLocator/

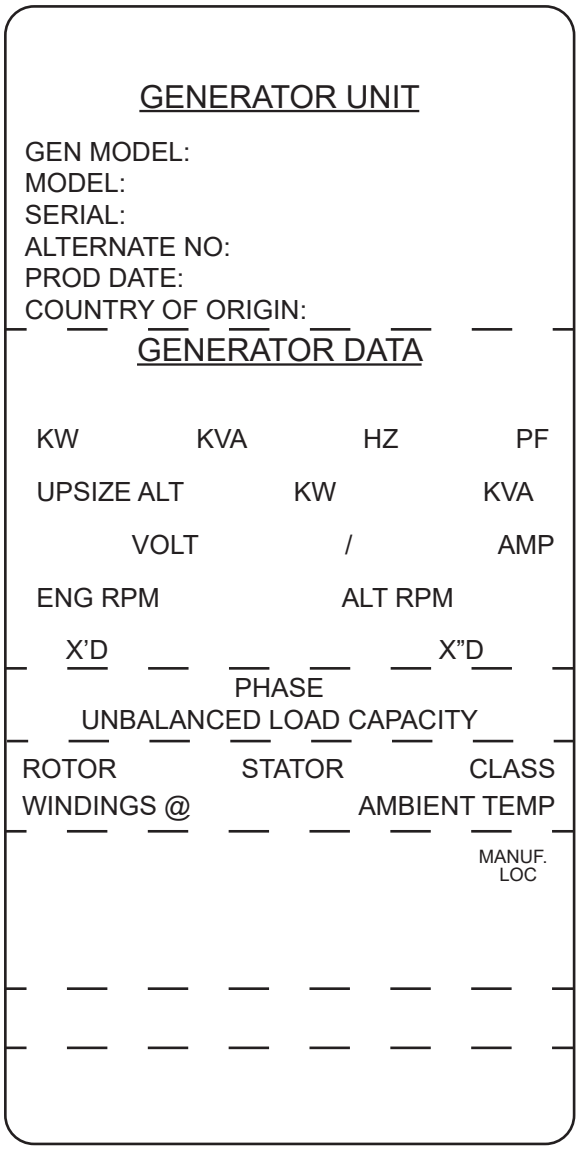

Sample Label

⚠ CALIFORNIA WARNING

This product can expose you to chemicals including benzene, a carcinogen and reproductive toxicant, which are known to the State of California to cause cancer and birth defects or other reproductive harm. For more information, go to: www.p65warnings.ca.gov

(W000808)

Table of Contents

Section 1: Safety Rules & General Information

Introduction 5
- Read This Manual Thoroughly 5

Safety Rules 5

Personal Protective Equipment Recommendations 5
- How to Obtain Service 6

General Hazards 6

Exhaust Hazards 6

Fire Hazards 7

Electrical Hazards 7

Explosion Hazards 8

Battery Hazards 8

Section 2: General Information

Emissions 9
- Emissions Data Plate 9

Specifications 9

Engine Oil Recommendations 10

Operating Environment and Maintenance Kits 10

3-Phase Voltage Circuit Breaker Kits 10

Voltage Configuration Cartridges 11

Coolant Water Treatment 11

Fuel Requirements 11

Fuel System Configuration 11
- Controller fuel type selection 11

Battery Requirements 12
- Battery Charger 12
- Battery Safety Precautions 12

Corrosion Protection 13

Section 3: Activation and Startup

Orientation 15

Removing the Access Panels 15

Installing the Battery 15

Opening the Control Panel Cover Viewing Window 15

Installing Generac Generator Connectivity Accessory Cellular (GGCAC) Device (If Equipped) 16
- Attaching Connectivity Harness to Generac Generator Connectivity Accessory, Cellular 16
- Attaching Cellular Accessory to Mounting Plate 16
- Verifying Cellular Accessory Functionality 16

Activating the Unit 17

Starting and Running Engine 18

Operational Checks 19
- Self Test 19

Checking Manual Transfer Switch Operation 19

Electrical Checks 19
- Testing Generator Emergency Shutdown Rocker Switch Operation 20
- Testing Generator Under Load 20
- Checking Automatic Operation 21

Securing the Generator 21

Section 4: Operation

Control Panel 23

AUTO/MANUAL/OFF 24

Menu Navigation 24

Alarm/Warning Conditions 26

Changing Date/Time 26

Programmable Timers 26
- User Programmable 26
  - Exercise Time 26
  - Startup Delay Timer 26
  - Warm-Up Delay Timer 26

Firmware Updates 26
- Over-the-air-Firmware-Updates 26
- USB Port for Firmware Updates 26

Battery Charger 27

Transfer Switch Automatic Operation 27
- 3-Phase Sensing Kit for RTS Transfer Switches 27
- Automatic Sequence of Operation 27
  - Utility Failure 27
  - Cranking 27
  - Load Transfer 28

Transfer Switch Manual Operation 28
- Transfer to Generator Power 28
- Transfer Back to Utility Power 29

Section 5: Maintenance

Component Locations 31

Maintenance 32
Regular Maintenance Service Points 32
Service Maintenance Schedule 33
Removing From Service 33
25 Hour Break-In 34
Daily Maintenance 34
Schedule A Maintenance 34
Schedule A Maintenance Item Locations 34
Preliminary Instructions 35
Inspecting the Enclosure Slots 35
Inspecting the Fuel Lines 35
Inspecting Coolant Level and Hoses 35
Inspecting Radiator for Clogging 35
Inspecting Lubricating Oil Level and Drain Hose 35
Replacing Lubricating Oil and Oil Filter 37
Checking Battery Condition/Fluid Level 38
Checking Condition and Cleaning 38
Checking Battery Fluid Level 38
Verifying Battery State of Charge 38
Battery Replacement 38
Removing Battery 38
Installing Battery 39
Inspecting Accessory/Drive Belt 39
Replacing Air Filter Element 39
Final Instructions 40
Schedule B Maintenance 40
Schedule B Maintenance Item Locations 40
Draining and Flushing Coolant System 40
Cleaning Coolant Level Sensor 41
Cleaning/Gapping/Replacing Spark Plugs 42
Final Instructions 42
Schedule C Maintenance 43
Return To Service 43
Removing From Service During Utility Outage 43
Returning to Service During Utility Outage 43
Storage 44
Preparing For Storage 44
Removing Battery 44
Returning to Service After Storage 44
Attention After Submersion 45

Section 6: Troubleshooting

Engine Troubleshooting 47
Controller Troubleshooting 48
Generac Generator Connectivity Accessory, Cellular (GGCAC) 49

Section 1: Safety Rules & General Information

Introduction

Thank you for purchasing this compact, high performance, liquid-cooled, engine-driven generator. It is designed to automatically supply electrical power to operate critical loads during a utility power failure.

This unit is factory installed in an all-weather enclosure intended exclusively for outdoor installation. This generator will operate using either vapor withdrawn liquid propane (LP gas) or natural gas (NG).

NOTE: This generator is suitable for supplying typical residential/commercial loads, such as induction motors (sump pumps, refrigerators, freezers, air conditioners, furnaces, etc.), electronic components (computers, monitors, televisions, etc.), lighting, microwaves, and other residential and business loads, when sized correctly.

The information in this manual is accurate based on products produced at the time of publication. The manufacturer reserves the right to make technical updates, corrections, and product revisions at any time without notice.

Read This Manual Thoroughly



⚠WARNING

Consult Manual. Read and understand manual completely before using product. Failure to completely understand manual and product could result in death or serious injury.

(W000100)

If any section of this manual is not understood, contact the nearest Independent Authorized Service Dealer (IASD) or Generac Customer Service at 1-888-436-3722 (1-888-GENERAC), or visit ***www. generac. com*** for starting, operating, and servicing procedures. The owner is responsible for correct maintenance and safe use of the unit.

This manual must be used in conjunction with all other supporting product documentation supplied with the product.

IMPORTANT SAFETY INSTRUCTIONS. SAVE THESE INSTRUCTIONS for future reference. This manual contains important instructions that must be followed during placement, operation, and maintenance of the unit and its components. Always supply this manual to any individual that will use this unit, and instruct them on how to correctly start, operate, and stop the unit in case of emergency.

Safety Rules

The manufacturer cannot anticipate every possible circumstance that might involve a hazard. The alerts in this manual, and on tags and decals affixed to the unit, are not all inclusive. If using a procedure, work method, or operating technique that the manufacturer does not specifically recommend, verify that it is safe for others and does not render the equipment unsafe.

Throughout this publication, and on tags and decals affixed to the unit, DANGER, WARNING, CAUTION, and NOTE blocks are used to alert personnel to special instructions about a particular operation that may be hazardous if performed incorrectly or carelessly. Observe them carefully. Alert definitions are as follows:

⚠DANGER

Indicates a hazardous situation which, if not avoided, will result in death or serious injury.

(D000001)

⚠WARNING

Indicates a hazardous situation which, if not avoided, could result in death or serious injury.

(W000002)

⚠CAUTION

Indicates a hazardous situation which, if not avoided, could result in minor or moderate injury.

(C000003)

NOTE: Notes contain additional information important to a procedure and will be found within the regular text of this manual.

These safety alerts cannot eliminate the hazards that they indicate. Common sense and strict compliance with the special instructions while performing the action or service are essential to preventing accidents.

Personal Protective Equipment Recommendations

Always wear Personal Protective Equipment (PPE) as noted throughout this manual. Also, follow all site-specific requirements and all local, state, and federal requirements for PPE.

How to Obtain Service

When the unit requires servicing or repairs, contact Generac Customer Service at 1-888-GENERAC (1-888-436-3722) or visit ***www.generac.com*** for assistance.

When contacting Generac Customer Service about parts and service, always supply the complete model and serial number of the unit as given on its data decal located on the unit. Record the model and serial numbers in the spaces provided on the front cover of this manual.

General Hazards

⚠DANGER

Loss of life. Property damage. Installation must always comply with applicable codes, standards, laws and regulations. Failure to do so will result in death or serious injury.

(D000190)



⚠WARNING

Loss of life. This product is not intended to be used in a critical life support application. Failure to adhere to this warning could result in death or serious injury.

(W000209)

⚠WARNING

Equipment damage. This unit is not intended for use as a prime power source. It is intended for use as an intermediate power supply in the event of temporary power outage only. Doing so could result in death, serious injury, and equipment damage.

(W000247)

⚠WARNING

Electric Shock. Only a trained and licensed electrician should perform wiring and connections to unit. Failure to follow proper installation requirements could result in death, serious injury, and equipment or property damage.

(W000155)



⚠WARNING

Moving Parts. Keep clothing, hair, and appendages away from moving parts. Failure to do so could result in death or serious injury.

(W000111)



⚠WARNING

Moving Parts. Do not wear jewelry when starting or operating this product. Wearing jewelry while starting or operating this product could result in death or serious injury.

(W000115)

⚠WARNING

Risk of injury. Do not operate or service this machine if not fully alert. Fatigue can impair the ability to service this equipment and could result in death or serious injury.

(W000215)

⚠WARNING

Accidental Start-up. Disconnect the negative battery cable, then the positive battery cable when working on unit. Failure to do so could result in death or serious injury.

(W000130)

⚠WARNING

Injury and equipment damage. Do not use generator as a step. Doing so could result in falling, damaged parts, unsafe equipment operation, and could result in death or serious injury.

(W000216)

- Inspect the generator regularly, and contact an IASD for parts needing repair or replacement.

Exhaust Hazards



⚠DANGER

Asphyxiation. Running engines produce carbon monoxide, a colorless, odorless, poisonous gas. Carbon monoxide, if not avoided, will result in death or serious injury.

(D000103)



⚠DANGER

Asphyxiation. Carbon monoxide can kill in minutes. Operate this unit outdoors only. Failure to do so will result in death or serious injury.

(D000525)



⚠WARNING

Asphyxiation. Always use a battery operated carbon monoxide alarm indoors and installed according to the manufacturer's instructions. Failure to do so could result in death or serious injury.

(W000178)

⚠WARNING

Equipment and property damage. Do not alter construction of, installation, or block ventilation for generator. Failure to do so could result in unsafe operation or damage to the generator.

(W000146)

Fire Hazards



⚠WARNING

Fire hazard. Do not obstruct cooling and ventilating airflow around the generator. Inadequate ventilation could result in fire hazard, possible equipment damage, death or serious injury.

(W000217)



⚠WARNING

Fire and explosion. Installation must comply with all local, state, and national electrical building codes. Noncompliance could result in unsafe operation, equipment damage, death or serious injury.

(W000218)



⚠WARNING

Fire hazard. Use only fully-charged fire extinguishers rated "ABC" by the NFPA. Discharged or improperly rated fire extinguishers will not extinguish electrical fires in automatic standby generators.

(W000219)



⚠WARNING

Risk of Fire. Unit must be positioned in a manner that prevents combustible material accumulation underneath. Failure to do so could result in death or serious injury.

(W000147)

Comply with regulations the local agency for workplace health and safety has established. Also, verify that the generator is installed in accordance with the manufacturer's instructions and recommendations. Following proper installation, do nothing that might alter a safe installation and render the unit in noncompliance with the aforementioned codes, standards, laws, and regulations.

Electrical Hazards



⚠DANGER

Electrocution. Contact with bare wires, terminals, and connections while generator is running will result in death or serious injury.

(D000144)



⚠DANGER

Electrocution. Water contact with a power source, if not avoided, will result in death or serious injury.

(D000104)



⚠DANGER

Electrocution. Do not wear jewelry while working on this equipment. Doing so will result in death or serious injury.

(D000188)



⚠DANGER

Electrocution. Never connect this unit to the electrical system of any building unless a licensed electrician has installed an approved transfer switch. Failure to do so will result in death or serious injury.

(D000150)



⚠DANGER

Electrocution. In the event of electrical accident, immediately shut power OFF. Use non-conductive implements to free victim from live conductor. Apply first aid and get medical help. Failure to do so will result in death or serious injury.

(D000145)



⚠WARNING

Electrocution. Refer to local codes and standards for safety equipment required when working with a live electrical system. Failure to use required safety equipment could result in death or serious injury.

(W000257)

Explosion Hazards



⚠DANGER

Explosion and fire. Fuel and vapors are extremely flammable and explosive. No leakage of fuel is permitted. Keep fire and spark away. Failure to do so will result in death or serious injury.

(D000192)

⚠DANGER

Explosion and fire. Connection of fuel source must be done by a qualified professional technician or contractor. Incorrect installation of this unit will result in death, serious injury, and property and equipment damage.

(D000151)



⚠DANGER

Risk of fire. Allow fuel spills to completely dry before starting engine. Failure to do so will result in death or serious injury.

(D000174)



⚠WARNING

Risk of Fire. Hot surfaces could ignite combustibles, resulting in fire. Fire could result in death or serious injury.

(W000110)

Battery Hazards



⚠DANGER

Electrocution. Do not wear jewelry while working on this equipment. Doing so will result in death or serious injury.

(D000188)



⚠WARNING

Explosion. Do not dispose of batteries in a fire. Batteries are explosive. Electrolyte solution can cause burns and blindness. If electrolyte contacts skin or eyes, flush with water and seek immediate medical attention.

(W000162)



⚠WARNING

Explosion. Batteries emit explosive gases while charging. Keep fire and spark away. Wear protective gear when working with batteries. Failure to do so could result in death or serious injury.

(W000137)



⚠WARNING

Electrical shock. Disconnect battery ground terminal before working on battery or battery wires. Failure to do so could result in death or serious injury.

(W000164)



⚠WARNING

Risk of burns. Batteries contain sulfuric acid and can cause severe chemical burns. Wear protective gear when working with batteries. Failure to do so could result in death or serious injury.

(W000138)



⚠WARNING

Risk of burn. Do not open or mutilate batteries. Batteries contain electrolyte solution which can cause burns and blindness. If electrolyte contacts skin or eyes, flush with water and seek immediate medical attention.

(W000163)

Always recycle batteries in accordance with local laws and regulations. Contact your local solid waste collection site or recycling facility to obtain information on local recycling processes. For more information on battery recycling, visit Call2Recycle website at: ***http://Call2Recycle.org/locator***.

Section 2: General Information

Emissions

The United States Environmental Protection Agency (US EPA) (and California Air Resources Board (CARB), for engines/equipment certified to California standards) requires this engine/equipment to comply with exhaust and evaporative emissions standards. Locate the emissions compliance decal on the engine to determine applicable standards. See the included emissions warranty for emissions warranty information. Follow the maintenance specifications in this manual to verify the engine complies with applicable emissions standards for the duration of the product's life.

Emissions Data Plate

See ***Figure 2-1***. A data plate is attached to the right side engine foot to verify compliance with EPA emissions regulations.

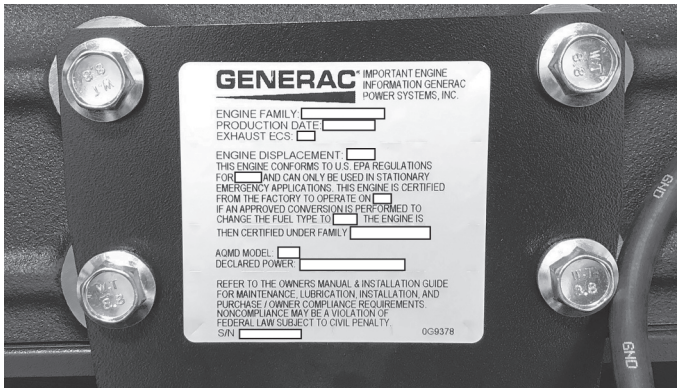

010173

Figure 2-1. Emissions Data Plate (Sample)

Specifications

Model	XG03245	XG04045	XG04845
Engine	**4.5 L NA**	**4.5 L NA**	**4.5 L NA**
Generator			
Rotor insulation	Class F		
Stator insulation	Class H		
Dimensions	83.4 x 33.6 x 45.2 in (211.9 x 85.4 x 114.7 cm)		
Product weight	1,695 lb (769 kg)		
Shipping weight	1,790 lb. (812 kg)		

Model	XG03245	XG04045	XG04845
Engine	**4.5 L NA**	**4.5 L NA**	**4.5 L NA**
Engine System			
Type	In-line		
Dry weight	710 lbs (322 kg)		
Bore	4.5 in (114 mm)		
Stroke	4.3 in (108 mm)		
Displace-ment	4.5 L		
Firing order	1-3-4-2		
Direction or rotation	CW from flywheel		
Compression ratio	9.9:1		
Spark plug gap	0.012-0.017 in (0.31-0.45 mm)		
Exercise Speed	1,200 rpm		
Operating Speed	1,800 rpm		
Cooling System			
Water pump	Belt driven		
Fan Type	Belt driven		3X Electric
Fan Mode	Pusher		
Coolant capacity	2.9 US gal (11 L)		
Max ambient air temperature	122 °F (50 °C)		
Lubricating System			
Oil pump type	Gear		
Oil filter type	Full flow spin-on cartridge		
Crankcase oil capacity	2.9 US gal (11 L)		
Lubricating oil type	Generac 5W-20		

Model	XG03245	XG04045	XG04845
Engine	**4.5 L NA**	**4.5 L NA**	**4.5 L NA**
Air Intake System			
Type	Naturally aspirated		
Exhaust System			
Breather	Closed		
Electrical System			
Battery charge alternator	12 VDC, 35 A		12 VDC, 145 A
Smart battery charger	5 Amp		
Governor System			
Type	Electronic		
Frequency regulation	Isochronous		
Steady state regulation	± 0.25%		
Voltage Regulator			
Type	Electronic		
Sensing phase	All phases		
Regulation	± 1%		
Fuel System			
LP fuel pressure	7-14 in H_2O (1.74-3.48 kPa)		
NG fuel pressure	3.5-14 in H_2O (0.87-3.48 kPa)		

NOTE: A complete specification sheet is included in the documentation provided with the unit at the time of purchase. Contact an IASD for additional copies.

Engine Oil Recommendations

To maintain the product warranty, engine oil should be serviced in accordance with the recommendations of this manual. Maintenance kits designed and intended for use on this product are available from the manufacturer which include engine oil, oil filter, air filter, spark plug(s), a shop towel, and funnel. These kits can be obtained from an IASD or Generac Ordertree; ***generac.ordertree.com***.

The unit is filled at the factory with 5W-20 conventional engine oil. After the initial 25 hour break-in period, replace the oil with Generac proprietary 5W-20 Synthetic oil. After break-in, a synthetic oil which meets or exceeds SAE specifications is recommended. Once synthetic oil is used, it should be used for the life of the generator. It is not recommended to go back to a conventional oil. Do not use special additives.

Operating Environment and Maintenance Kits

The following kits are offered to keep the unit running at its peak:

Cold Weather Operation

- Battery Heater Kit
  - Recommended for operating environments where the temperature drops below 32 °F (0 °C). The heater is externally powered by 120 VAC, 60 Hz.
- Engine Block Heater Kit
  - Recommended for operating environments where the temperature drops below 0 °F (-18 °C). The heater is externally powered by 120 VAC, 60 Hz.

Scheduled Maintenance Kit

- Kit includes the recommended parts to maintain the generator. See ***Service Maintenance Schedule*** for regular maintenance intervals.

For additional information, or to order any of these kits, contact an IASD or customer service representative.

3-Phase Voltage Circuit Breaker Kits

All 1-phase XG generator models include a circuit breaker. 3-phase XG generator models do not include a circuit breaker. A 3-phase circuit breaker is not required for the generator function or for the UL listing. The Power Zone 410 controller provides overcurrent protection for the generator thereby eliminating the need for a circuit breaker. However, a circuit breaker may still be required by the Authority Having Jurisdiction (AHJ). See all national, state, and local codes before proceeding with generator installation.

3-phase circuit breakers can be installed in the generator and are offered as optional field-installable kits. The generator control panel has a cover plate over the opening where the circuit breaker is installed. Kits include the circuit breaker, a lockout bracket, wiring and mounting hardware. The lockout bracket allows for a user-provided padlock to be assembled to lock the circuit breaker in the OPEN (OFF) position. The circuit breaker provides a disconnecting means.

The XG generator specification sheet lists all available 3-phase circuit breaker kits with typical power ratings and voltages for use. See installation manual for directions on how to install the circuit breaker.

Voltage Configuration Cartridges

Every 3-phase XG generator model is capable of being configured for 208/120 (as-manufactured from the factory), 240/120, or 480/277 V 3-phase output. There are no dedicated 3-phase voltage XG models available. It is also not possible to change between 3-phase and 1-phase output for any XG model.

This voltage configuration capability is made possible with a 12-lead alternator which can have the leads reconnected to output the different voltages. The connections are made using a Voltage Configuration Cartridge (VCC). The VCC is voltage-specific making the required connections for the alternator leads.

Every 3-phase XG generator model includes the 208/120 V VCC factory installed. VCCs can be easily changed during the generator installation process to output a different 3-phase voltage. The corresponding voltage must also be selected in the controller as part of the installation process. See installation manual for directions on how to install different VCCs and select the voltage using the controller.

Coolant Water Treatment

⚠DANGER

Risk of Poisoning. Do not allow coolant to contact skin or eyes. If coolant is consumed, seek medical attention immediately. Failure to do so will result in death or serious injury.

(D000559)

⚠WARNING



Risk of burns. Do not open coolant system until engine has completely cooled. Doing so could result in serious injury.

(W000154)

⚠CAUTION

Engine damage. Use approved coolant only.Failure to do so could result in equipment damage.

(C000323)

Use of incorrect coolants can damage the engine cooling system. Use demineralized water or distilled water for best results. Hard water causes scale deposits, which reduces cooling efficiency and raises internal temperatures, possibly leading to engine damage. Use an anti-corrosive to prevent rot in summer and anti-freeze to prevent freezing in winter.

Dilute the anti-freeze based on a theoretical temperature that is 9–18 °F (5–10 °C) below the lowest temperature expected in the area. A ratio of 40–60% is most common range.

Coolant Freezing Point	-13 °F (-25 °C)	-31 °F (-35 °C)	-58 °F (-50 °C)
Coolant Volume	40%	50%	60%
Water Volume	60%	50%	40%

NOTE: Use only Generac brand 50/50 ethylene glycol type coolant.

IMPORTANT NOTE: Do not use propylene glycol type coolant. Using the wrong coolant, mixing different types of coolant, or even mixing different brands of the correct type of coolant can produce unsatisfactory results, possibly leading to engine damage.

Fuel Requirements

This unit is equipped with a fuel system for the following fuels:

- Liquid Propane (LP) Vapor
- Natural Gas (NG)

Recommended fuels must have an energy density of at least 91,420 BTU/US gal (25.5 MJ/L) for LP or at least 1,036 BTU/ft^3 (37.3 MJ/m^3) for NG. If using LP, a minimum LP tank size of 250 US gal (946 L) is recommended. See the installation manual for complete details and procedures.

Fuel System Configuration

The fuel type is configured using only the Power Zone 410 controller.

Controller fuel type selection

Navigate to the appropriate menu in the controller to select the fuel type to configure the fuel system.

NOTE: Generac recommends fuel selection is done by an IASD or a qualified, competent installation contractor or electrician who is familiar with applicable codes, standards, and regulations.

NOTE: Failure to select the correct fuel type matching the fuel supplied will result in decreased performance and an increase in emissions, which is a violation of Environmental Protection Agency (EPA) regulations. It is the responsibility of the installer to verify the correct recommended fuel is supplied to the generator fuel system. Thereafter, the owner/operator must verify only the correct fuel is supplied.

- Selecting the correct fuel type occurs during the Install Wizard Process. Navigate the software using UP arrow, DOWN arrow, ENTER, and ESCAPE. See ***Figure 4-2*** for more information.

Battery Requirements

Recommended Battery Size: Group 27 Type: Flooded Lead Acid Voltage: 12 V Amps: 600 CCA Minimum Dimensions: Not to exceed (L x W x H) 12.1 x 6.8 x 8.9 in (306 x 173 x 225 mm)
Maximum Battery Size Size: Group 31 Type: Flooded Lead Acid Voltage: 12 V Amps: 750 CCA Minimum Dimensions: Not to exceed (L x W x H) 13 x 6.8 x 9.4 in (330 x 173 x 240 mm)
When replacing batteries, use the same number and type specified.

Battery Charger

A 5 amp battery charger is integrated into the Power Zone 410 controller. It operates as a “smart charger” which verifies output charging levels are safe and continuously optimized to promote maximum battery life.

Battery Safety Precautions



DANGER

Electrocution. Do not wear jewelry while working on this equipment. Doing so will result in death or serious injury.

(D000188)



WARNING

Risk of burns. Batteries contain sulfuric acid and can cause severe chemical burns. Wear protective gear when working with batteries. Failure to do so could result in death or serious injury.

(W000138)



WARNING

Explosion hazard. Never add acid to a battery. Add distilled water only. Failure to do so could result in death, serious injury, or equipment damage.

(W000316)



WARNING

Risk of burn. Do not open or mutilate batteries. Batteries contain electrolyte solution which can cause burns and blindness. If electrolyte contacts skin or eyes, flush with water and seek immediate medical attention.

(W000163)



WARNING

Electrocution. Never charge a battery in wet conditions. Doing so could result in death, serious injury, equipment or property damage.

(W000482)



WARNING

Electrical shock. Disconnect battery ground terminal before working on battery or battery wires. Failure to do so could result in death or serious injury.

(W000164)



WARNING

Explosion. Batteries emit explosive gases while charging. Keep fire and spark away. Wear protective gear when working with batteries. Failure to do so could result in death or serious injury.

(W000137)



WARNING

Explosion. Do not dispose of batteries in a fire. Batteries are explosive. Electrolyte solution can cause burns and blindness. If electrolyte contacts skin or eyes, flush with water and seek immediate medical attention.

(W000162)

Servicing of the batteries is to be performed or supervised by personnel knowledgeable of batteries and the required precautions. Keep unauthorized personnel away from batteries.

“**CAUTION** – a battery presents a risk of high short circuit current. The following precautions are to be observed when working on batteries:

- Remove watches, rings, or other metal objects.
- Use tools with insulated handles.
- Do not lay tools or metal on top of the battery.
- Discharge static electricity from the body before touching the battery by first touching a grounded metal surface.”

"**CAUTION** – The electrolyte is a dilute sulfuric acid which is harmful to the skin and eyes. It is electrically conductive and corrosive. The following procedures are to be observed:

- Wear full eye protection and protective clothing.
- Where electrolyte contacts the skin, wash it off immediately with water.
- Where electrolyte contacts the eyes, flush thoroughly and immediately with water and seek medical attention.
- Spilled electrolyte is to be washed down with an acid neutralizing agent. A common practice is to use a solution of one pound (500 grams) bicarbonate of soda to one gallon (4 liters) of water. The bicarbonate of soda solution is to be added until the evidence of reaction (foaming) has ceased. The resulting liquid is to be flushed with water and the area dried."

"**CAUTION** – lead-acid batteries present a risk of fire because they generate hydrogen gas. The following procedures are to be followed:

- DO NOT SMOKE when near batteries.
- DO NOT cause flame or spark in battery area.
- Discharge static electricity from body before touching batteries by first touching a grounded metal surface."

Always recycle batteries in accordance with local laws and regulations. Contact your local solid waste collection site or recycling facility to obtain information on local recycling processes. For more information on battery recycling, visit Call2Recycle website at: ***http://Call2Recycle.org/locator***.

- Stationary emergency generators installed with automatic transfer switches will crank and start automatically when NORMAL (UTILITY) source voltage is removed or is below an acceptable preset level. Do not connect battery cables until NORMAL (UTILITY) source voltage at transfer switch is correct and system is ready to be placed into operation to prevent automatic startup and possible injury to personnel.

Corrosion Protection

Periodically wash and wax the enclosure using automotive type products. Frequent washing is recommended in salt water/coastal areas. Use All Surface Protectant on all vinyl, rubber, and plastics to create a barrier which seals and protects the surface from water and UV rays.

This page intentionally left blank.

Section 3: Activation and Startup

Orientation

NOTE: The XG04845 unit is depicted in the artwork used in this manual. The location and appearance of some components may vary among models.

See ***Figure 3-1***. The front (service left) side (A) of the generator has the service access panel with Generac logo. The control panel is on the right (service rear) side (B) of the generator.

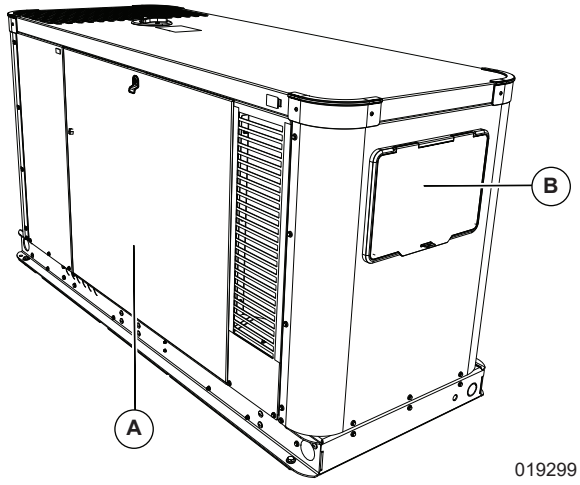

Figure 3-1. Enclosure Front (Service Left) and Right (Service Rear) View

Removing the Access Panels

NOTE: Access panels are located at both the front (service left) and rear (service right) sides of the enclosure. The front access panel requires a key and the rear access panel has bolts.

Proceed as follows to remove the front access panel:

1. See ***Figure 3-2***. Remove key (B) from bag attached to door of unit.

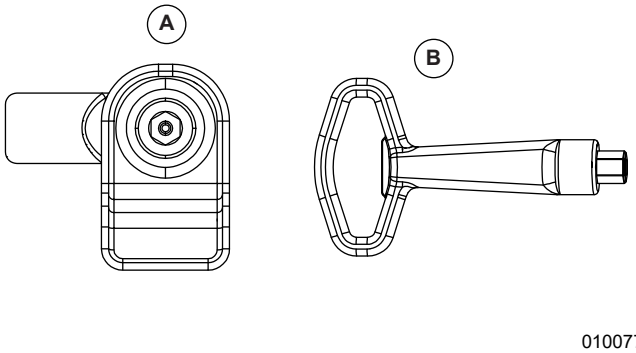

Figure 3-2. Access Panel Key and Latch (Typical)

2. Insert key into latch (A) and rotate counterclockwise one half turn.
3. Raise panel using thumb latch.

Installing the Battery

⚠WARNING

Explosion. Batteries emit explosive gases. Always connect positive battery cable first to avoid spark. Failure to do so could result in death or serious injury.

(W000133)

Proceed as follows to install the battery:

1. See ***Figure 3-3***. Loosen nylon strap (D) on battery tray.

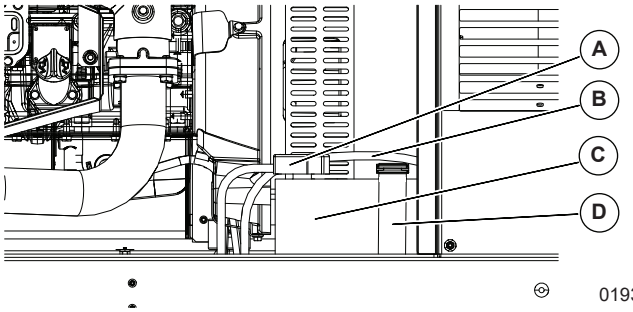

Figure 3-3. Battery Cable Connections

2. Install battery (C) onto tray.
3. Secure nylon strap over top of battery and tighten.
4. Install positive battery cable (red) (A) to positive (+) battery terminal.
5. Install negative battery cable (black) (B) to negative (-) battery terminal.

Opening the Control Panel Cover Viewing Window

Proceed as follows to open the viewing window:

1. Remove protective film from exterior surface of viewing window.
2. Lift viewing window to access controls.
3. See ***Figure 3-4***. To hold viewing window open, rotate prop up and insert into stop in cover (A).

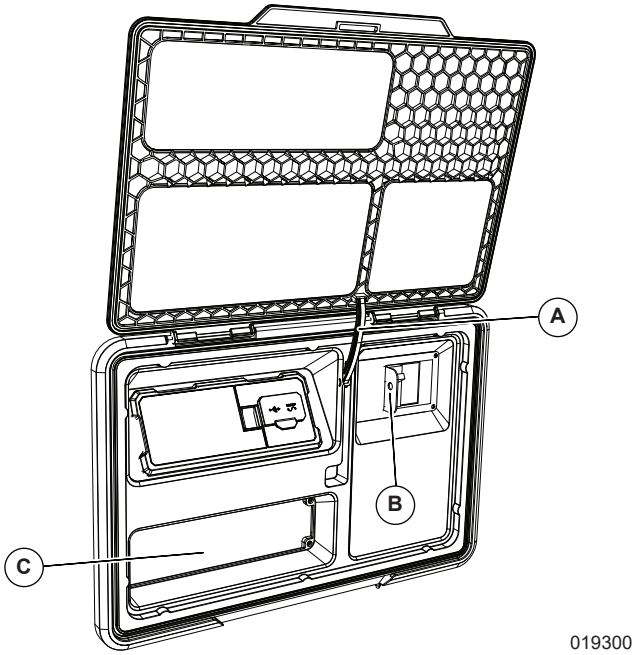

Figure 3-4. Control Panel Cover-Viewing Window

A	Control Panel Cover Prop Rod	**C**	NFPA 110 Controller Module Expansion Cover
B	MLCB Lockout		

Installing Generac Generator Connectivity Accessory Cellular (GGCAC) Device (If Equipped)

Attaching Connectivity Harness to Generac Generator Connectivity Accessory, Cellular

Proceed as follows to attach connectivity harness to cellular accessory:

1. Align key in the connectivity harness with the slot in the mating connector on the cellular accessory. Press connectors together.
2. Finger-tighten nut on the connectivity harness.
3. Turn the nut on the connectivity harness clockwise until fully seated.

Attaching Cellular Accessory to Mounting Plate

Proceed as follows to attach cellular accessory to mounting plate:

1. Align arrow on the cellular accessory with the arrow on the mounting plate.
2. Press cellular accessory flush with mounting plate.
3. Turn cellular accessory clockwise to attach to mounting plate until there is an audible click.

Verifying Cellular Accessory Functionality

- Green LED on cellular accessory face will illuminate once the connectivity harness is fully connected.
- LED will slowly pulse while cellular accessory attempts to connect to generator and to cellular network.
- LED will be solid green when connected successfully. If the cellular accessory encounters an error, it will begin blinking. See ***Generac Generator Connectivity Accessory, Cellular (GGCAC)*** troubleshooting guide and the GGCAC Installation Manual A0004737453.

Activating the Unit

Display Reads: 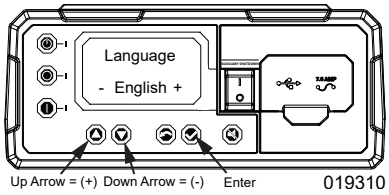 	**Generator Active** is displayed on the LCD during initial startup. After displaying firmware and hardware version codes, as well as other system information, the Install Wizard is launched, and the Language screen is displayed. Use UP arrow or DOWN arrow to scroll to desired language. Press ENTER.	If the wrong language is selected, it may be changed later using the EDIT menu.
Display Reads: ***Activate me (ENT) or ESC to run in manual***	Press ENTER.	Press ESCAPE to abort the activation sequence. NOT ACTIVATED is displayed and unit will run in MANUAL only. Disconnect and reconnect the negative battery cable to restart the activation routine. If power is removed after a successful activation, no data is lost, but time and date must be updated.
Display Reads: ***To Activate go to www. activategen. com***	Go to www. activategen. com or call 1-888-9ACTIVATE (922-8482, US & Canada only) if activation passcode is not available. If activation pass code is available, wait a few seconds for the next display.	
Display Reads: ***SN 1234567890 PASS CODE XXXXX***	Use UP arrow or DOWN arrow to increase or decrease the digit to correspond to the first number of the pass code. Press ENTER. Repeat step to enter remaining digits.	Press ESCAPE to return to preceding digits if a correction becomes necessary. If attempts to enter activation code are unsuccessful, verify number against the activation code given on activategen. com. If it is correct, contact 1-888-9ACTIVATE (922-8482, US & Canada only). For international assistance, call 01-262-953-5155.
Display Reads: ***Select Hour (0-23) - 6 +***	Use UP arrow or DOWN arrow to increase or decrease the hour. Press ENTER. Use UP arrow or DOWN arrow to increase or decrease the minute. Press ENTER. Use UP arrow or DOWN arrow to select the month. Press ENTER. Use UP arrow or DOWN arrow to increase or decrease the date. Press ENTER. Use UP arrow or DOWN arrow to increase or decrease the year. Press ENTER.	With the GGCAC device successfully installed and connected, the date and time on the generator will be set automatically.
Display Reads: ***Fuel Selection*** ***- LP +*** ***- NG +***	Fuel Type Selection. Use UP or DOWN arrow to index the correct fuel type. Press ENTER. Select the correct fuel based on the fuel connected at the installation site.	

Display Reads: ***Select Voltage*** ***Set Alternator Node*** ***120/208 VAC (3P)*** ***120/240 VAC (3P)*** ***277/480 VAC (3P)***	Set the Voltage for a 3-phase unit. Use UP arrow or DOWN arrow to select the correct voltage. Press ENTER.	Only available on 3-phase configurations. The selection must match the VCC installed in the unit.
Display Reads: ***Config Quiet Test? Yes No***	Use UP arrow or DOWN arrow to select either YES or NO. Press ENTER.	Select YES to perform exercise at low speed. Select NO to perform exercise at normal operating speed.
Display Reads: ***HH:MM***	Set Exercise Time. Use UP arrow or DOWN arrow to increase or decrease the hour. Press ENTER. Use UP arrow or DOWN arrow to increase or decrease the minute. Press ENTER. Use UP arrow or DOWN arrow to scroll to the correct frequency. Press ENTER.	In AUTO, the engine starts and runs at the time and frequency (monthly, bi-weekly, weekly) specified.
Display Reads: ***Interval***	Set interval for exercise frequency. Use UP arrow or DOWN arrow to scroll to the desired interval. Press ENTER.	The interval for weekly or bi-weekly frequency is Sunday through Monday options. The interval for monthly is 1-28 (day of the month).
Display Reads: ***Duration XX min***	Set Exercise Duration. Use UP arrow or DOWN arrow to increase or decrease the minutes. Press ENTER.	In AUTO, the engine starts and runs based on the time, frequency, and interval selected above for the duration of time selected.
Display Reads: ***Xfer***	Set Transfer on Exercise. Use Up arrow or DOWN arrow to enable and select transfer frequency. Press ENTER.	In AUTO, if transfer on exercise is enabled, transfer of loads to the generator will occur at the selected frequency (3, 6, or 12 months). If No is selected, transfer of loads to the generator does not occur unless utility power fails.

Starting and Running Engine

Proceed as follows to start and run the engine:

1. See ***Figure 3-5***. Pull up rubber flap covering fuse holder and verify installation of 7.5 amp fuse (A).

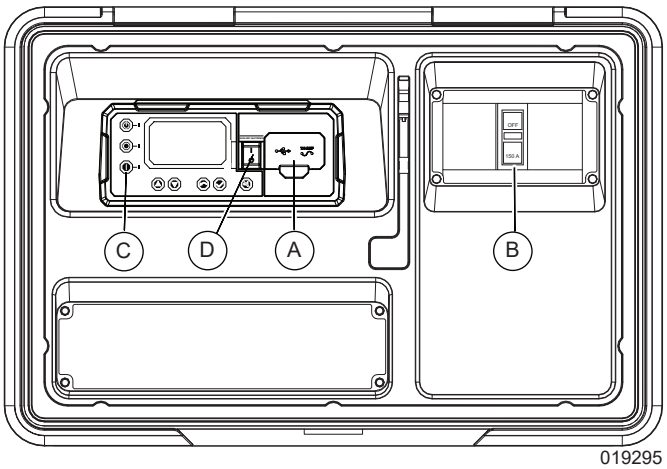

Figure 3-5. Generator Control Panel

2. Set the generator MLCB (generator disconnect) (B) to OFF (OPEN), if equipped.

   NOTE: Generator MLCB (generator disconnect) is only included on 1-phase units. It is an optional kit for 3-phase units.

3. See ***Figure 3-6*** for external generator emergency shutdown switch (A).
4. See ***Figure 3-5***. Verify both generator emergency shutdown switches (D) are ON.
5. Press MANUAL on the controller (C) to start engine. A blue LED illuminates to verify system is in MANUAL.
6. Allow engine to run until it reaches normal operating temperature. Press OFF on the controller to stop the engine. A red LED illuminates to verify system is OFF.

   NOTE: When the NFPA 110 Controller Module is installed, the key switch will function in replacement of the AUTO, OFF, and MANUAL mode buttons. Buttons (C) as seen in ***Figure 3-5*** will be inoperable.

Operational Checks

NOTE: The following procedures require special tools and skills. Contact an IASD to perform these tasks.

Self Test

Controller goes through a system self test upon startup, which checks for utility voltage on the DC circuits. This is done to prevent damage if installer mistakenly connects AC utility power sense wires into DC terminal block. If utility voltage is detected, controller displays a warning message and locks out the generator, preventing damage to the controller. Remove power to controller to clear this warning.

Utility voltage must be turned on and present at N1 and N2 terminals inside generator controller for this test to be performed and pass.

Complete the following before starting:

1. Verify generator is OFF. A red LED on the controller illuminates to verify system is off.
2. Set generator MLCB (generator disconnect) to OFF (OPEN), if equipped.
3. Turn off all circuit breakers/electrical loads to be powered by the generator.
4. Verify both generator emergency shutdown switches are ON.
5. Check coolant and engine lubricating oil levels. See ***Inspecting Coolant Level and Hoses*** and ***Inspecting Lubricating Oil Level and Drain Hose***.

During initial startup only, generator may exceed normal number of start attempts and experience an “over crank” fault. This is due to accumulated air in the fuel system during installation. Reset alarm and restart up to two more times, if necessary. If unit fails to start, contact an IASD for assistance.

Checking Manual Transfer Switch Operation



⚠DANGER

Electrocution. High voltage is present at transfer switch and terminals. Contact with live terminals will result in death or serious injury.

(D000129)

See ***Transfer Switch Manual Operation*** section.

Electrical Checks



⚠DANGER

Electrocution. High voltage is present at transfer switch and terminals. Contact with live terminals will result in death or serious injury.

(D000129)

Proceed as follows to complete electrical checks:

1. Verify generator is in OFF mode. A red LED on the controller illuminates to verify system is OFF.
2. Set generator MLCB (generator disconnect) to OFF (OPEN), if equipped.
3. Turn off all circuit breakers/electrical loads to be supplied by generator.
4. Turn on utility power supply to transfer switch using the means provided (such as a utility circuit breaker).
5. Use an accurate AC voltmeter to verify utility power source voltage across transfer switch terminals N1, N2, and N3 (if 3-phase). Normal line-to-line voltage should be equivalent to rated unit voltage.
6. Verify utility power source voltage across terminals N1, N2, and N3 (if 3-phase) and the transfer switch neutral lug.
7. Turn off utility power supply to transfer switch when utility supply voltage is compatible with transfer switch and load circuit ratings.
8. Press MANUAL on the controller to crank and start engine.
9. Allow engine to warm up for approximately five minutes. Set generator MLCB (generator disconnect) to ON (CLOSED), if equipped.

10. Connect an accurate AC frequency meter across transfer switch terminal lugs E1, E2, and E3 (if 3-phase) and verify correct rated frequency (50 Hz or 60 Hz).
11. Use an accurate AC voltmeter to verify generator output voltage across transfer switch terminals E1 to E2, (E2 to E3 and E3 to E1 if 3-phase). Normal line-to-line voltage should be equivalent to site specific utility voltage.
12. Successively connect the AC voltmeter test leads across terminal lugs E1 and Neutral, then E2 and Neutral (and E3 and Neutral if 3-phase). Line-to-neutral reading in each case should match utility voltage reading. Verify generator phase rotation matches utility phase rotation if system is 3-phase.
13. Set generator MLCB (generator disconnect) to OFF (OPEN), if equipped.
14. Press OFF on the controller to shut engine down.

IMPORTANT NOTE: Do not proceed unless generator AC voltage and frequency are correct and within stated limits.

Testing Generator Emergency Shutdown Rocker Switch Operation

The generator is equipped with an independent means of shutting down the prime mover (engine) for use in emergency situations. The shutdown mechanism, when activated, requires a mechanical reset.

See ***Figure 3-6***. Generators are equipped with two generator emergency shutdown switches. One generator emergency shutdown switch (A) is located on the front at the top right corner just below the roof. The second generator emergency shutdown switch (B) is inside the control panel enclosure on the Power Zone 410 controller.

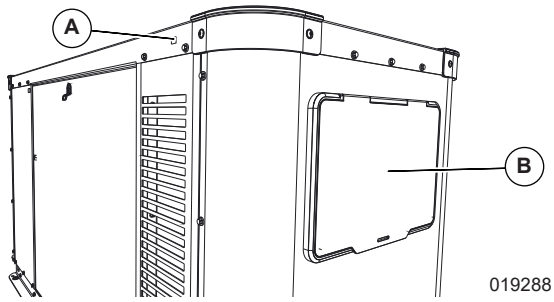

Figure 3-6. Generator Emergency Shutdown Switches

Proceed as follows to test generator emergency shutdown switches after installation to verify correct operation:

1. Verify generator emergency shutdown switches are ON.
2. Press MANUAL on the controller to start the engine.
3. With engine running, set one generator emergency shut down to OFF. Engine should shut down immediately.
   - **If engine stops,** set generator emergency shutdown switch to ON, clear alarm on controller, and restart engine to verify generator is operating normally. After verifying normal operation of the first generator emergency shutdown switch, verify operation of the second generator emergency switch.
   - **If engine does not stop,** generator emergency shutdown switch is not functioning correctly. Contact an IASD.

IMPORTANT NOTE: Generator emergency shutdown switches are not intended to be a primary means to shut down generator under normal operating conditions. Accidental activation of an generator emergency shutdown switch will prevent generator from operating during a power outage.

Testing Generator Under Load



DANGER

Electrocution. Do not manually transfer under load. Disconnect transfer switch from all power sources prior to manual transfer. Failure to do so will result in death or serious injury, and equipment damage.

(D000132)

Proceed as follows to test generator set with electrical loads applied:

1. Verify generator is in OFF mode. A red LED on the controller illuminates to verify system is off.
2. Turn off all breakers/electrical loads to be supplied by generator.
3. Turn off utility power supply to transfer switch, using the means provided (such as a utility circuit breaker).
4. Manually set transfer switch to STANDBY, i.e., load terminals connected to generator's E1, E2, and E3 (if 3-phase) terminals.
5. Press MANUAL on the controller. Engine will crank and start.
6. Allow engine to warm up for a few minutes.
7. Set generator MLCB (generator disconnect) to ON (CLOSED), if equipped. The transfer switch is now powered by standby generator.
8. Turn on circuit breaker/electrical loads supplied by generator.
9. Connect a calibrated AC voltmeter and a frequency meter across terminal lugs E1, E2, and E3 (if 3-phase). Voltage should be approximately unit rated

voltage. Verify with clamp on amp meter to verify unit is not overloaded.

10. Allow generator to run at full rated load for 20–30 minutes. Listen for unusual noises, vibration, or other indications of abnormal operation. Inspect for oil leaks, evidence of overheating, and other visible problems with the unit.
11. Turn off electrical loads when testing under load is complete.
12. Set generator MLCB (generator disconnect) to OFF (OPEN), if equipped.
13. Allow engine to run at no-load for 2–5 minutes.
14. Press OFF on the controller to shut engine down. A red LED illuminates to verify system is OFF.

Checking Automatic Operation

Proceed as follows to check system for correct automatic operation:

1. Verify generator is in OFF mode. A red LED on the controller illuminates to verify system is OFF.
2. Install front cover of transfer switch.
3. Turn on utility power supply to transfer switch, using the means provided (such as a utility circuit breaker).

   NOTE: Transfer switch will transfer to UTILITY.
4. Set generator MLCB (generator disconnect) to ON (CLOSED), if equipped.
5. Verify both generator emergency shutdown rocker switches are ON.
6. Press AUTO on the controller. The system is now ready for automatic operation.
7. Turn off utility power supply to transfer switch.
8. When utility source power is turned OFF, engine will crank and start after a 10 second delay (factory default setting). The transfer switch will then connect load circuits to standby side.
9. With generator running and loads powered by generator AC output, turn utility source power to transfer switch ON. The transfer switch will transfer to UTILITY. The engine then runs through the cool down cycle and shuts down.

Securing the Generator

Proceed as follows to secure the generator:

1. Use key to install side access panel.
2. Close viewing window.

   NOTE: See ***Figure 3-7***. Obtain viewing window hasp (A), if not installed. See ***Figure 3-8***. From backside (interior) of panel, remove fastener (B) as shown. Install hasp and secure with removed fastener (B).

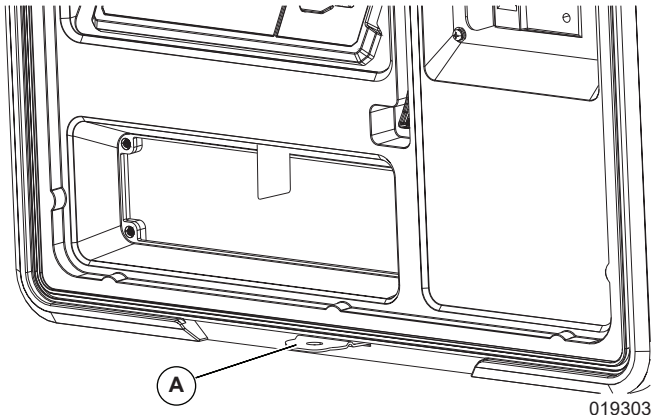

Figure 3-7. Install Viewing Window Hasp

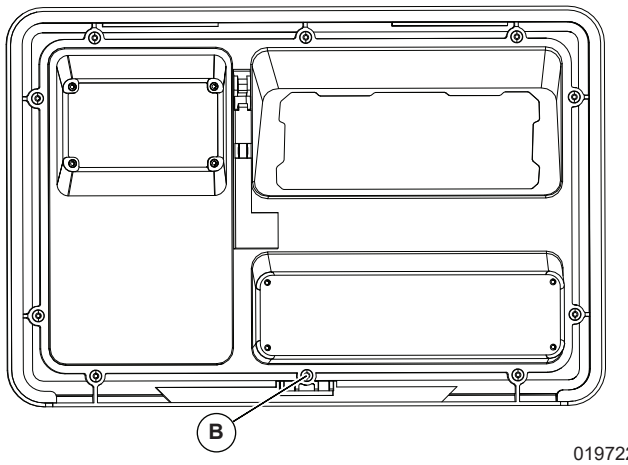

Figure 3-8. Fastening Viewing Window Hasp

3. Install customer supplied padlock into viewing window hasp.

This page intentionally left blank.

Section 4: Operation

Control Panel

⚠DANGER

Automatic start-up. Disconnect utility power and render unit inoperable before working on unit. Failure to do so will result in death or serious injury.

(D000191)

NOTE: The control panel is intended for use by qualified service personnel only.

NOTE: When the NFPA 110 Controller Module is installed, the key switch will function in replacement of the AUTO, OFF, and MANUAL mode buttons. Buttons D, E, and F as seen in ***Figure 4-1*** will be inoperable.

See ***Figure 4-1***. The control panel is located behind the viewing window at the rear of the unit. See ***Figure 3-5*** and ***Figure 3-6***.

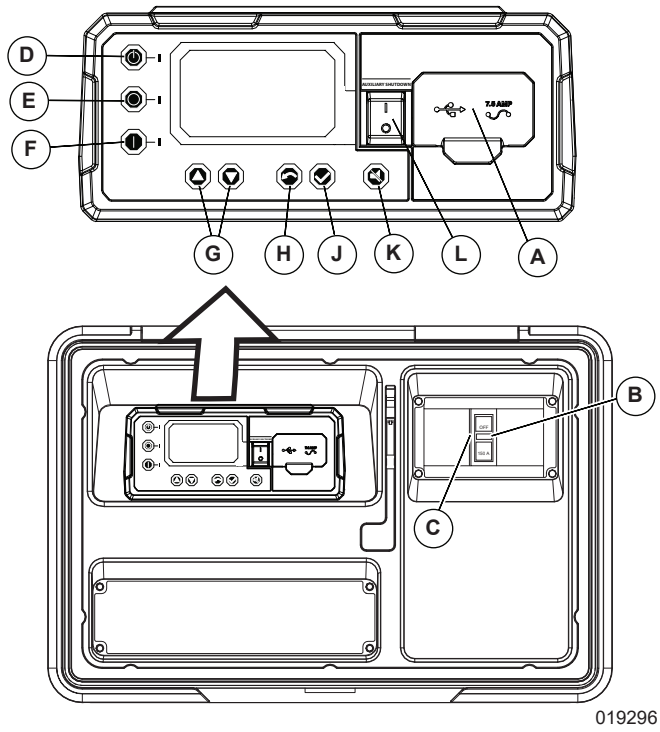

Figure 4-1. Control Panel with Controller and MLCB

A	USB port and 7.5 A fuse	**G**	Navigation Arrows
B	Generator MLCB (if equipped)	**H**	ESCAPE
C	MLCB Lockout	**J**	ENTER
D	AUTO mode	**K**	SILENCE
E	OFF mode	**L**	Generator Emergency Shutdown Switch
F	MANUAL mode		

IMPORTANT NOTE: With controller set to AUTO, engine may crank and start at any time without warning. Such automatic starting occurs during the programmed exercise cycle or when utility power source voltage drops below configured level. To prevent possible injury that might occur during sudden starts, always set the controller to OFF and remove the 7.5 amp fuse before working on or around the generator or transfer switch. For added security, place a DO NOT OPERATE tag or placard on both the control panel and transfer switch. Set generator MLCB (generator disconnect) to OFF (OPEN), if equipped.

AUTO/MANUAL/OFF

Feature	Description
AUTO	Activates fully automatic operation. Green LED illuminates to verify system is in AUTO. Transfer to standby power occurs if utility power fails. Functionality of exercise timer is enabled, if set.
MANUAL	Cranks and starts engine. Blue LED illuminates to verify system is in MANUAL. Transfer to standby power occurs if utility power fails. Functionality of exercise timer is disabled.
OFF	Shuts down engine, if running. Red LED illuminates to verify system is in OFF. Transfer to standby power does not occur if utility power fails.
The power symbols found on the controller and shutdown switches follow IEC 60417. The symbol for "ON" is a straight line "I" and the symbol for "OFF" is a circle "O".	

Menu Navigation

See ***Figure 4-2***.

Feature	Description
	System Menus
HOME Screen	System returns to HOME screen if controller is not used for five minutes. Screen normally displays a status message, such as Ready to Run (AUTO) or Switched to OFF (OFF), and total Hours of Protection. If an active alarm/warning condition occurs, the associated Alarm/Warning message is displayed. To clear Alarm/Warning message, press OFF on the controller, followed by ENTER. In the event of multiple Alarms/ Warnings, next message is then displayed. The highest priority alarm is always displayed first.
Display Backlight	Normally off. If operator presses any button, backlight will automatically light and remain on for five minutes.
Engine Screen	The Engine screen contains information for viewing only, including parameters such as: Generator RPM, Coolant Level, Coolant Temperature, Oil Temperature, Oil Pressure, Oil Level, Fuel Level, Battery Volts, Charge Amps, External Charger, and Battery Condition.
Power Screen	The Power screen contains information for viewing only, including parameters such as: Generator Voltages, Generator Current, Generator Power, Utility Voltages, and General Info.
Setting Screen	The Setting screen contains information and editable parameters which are adjustable by the user. These include: Adjust Voltage, Set Language, Set Date/Time, Set Exercise, Firmware Update, Start Delay, Warmup Time, Select Fuel, Maintenance, Perform Lamp Test, Set Brightness, and Set Contrast.
Info Screen	The Info screen contains information for viewing only, including parameters such as: Alarm Log, Run Log, Maintenance Log, and General.
Alarm Screen	The Alarm screen contains information for viewing only, and displays the currently active alarms and warnings.
DEALER MENU	Includes password protected settings and can be adjusted by an IASD during installation or a service visit.
	Navigation
ESCAPE	Used to abort a routine or return to the preceding menu.
ENTER	Used to make a selection or save an entry.
UP ARROW DOWN ARROW	Used to move forward or backward from menu to menu, or to scroll forward or backward (increment or decrement) through available selections.
NOTE: Pressing the controller illuminates the backlight for five minutes. The backlight also illuminates for 30 seconds whenever an active Alarm/Warning message is displayed.	

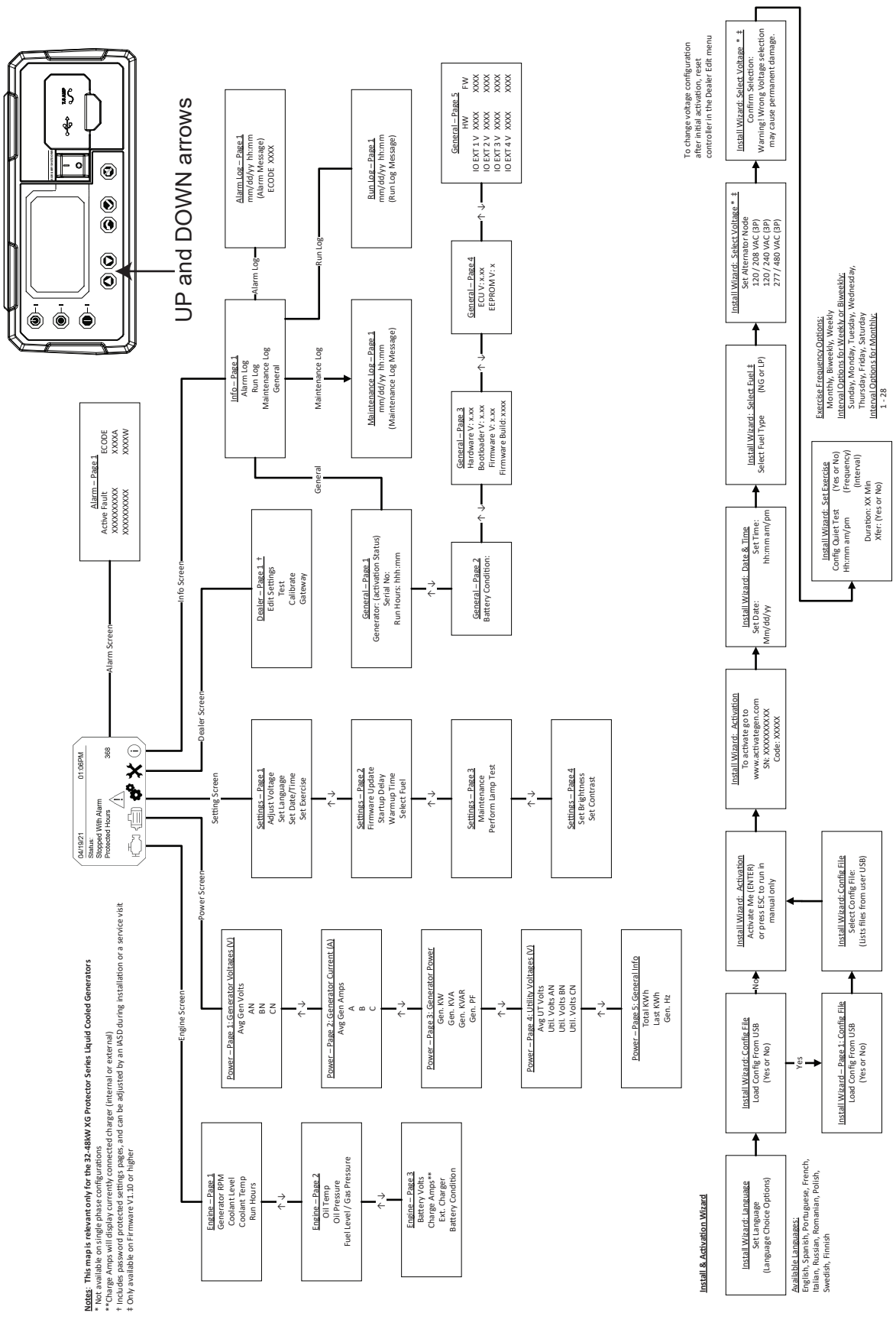

Figure 4-2. Navigation Menu

Alarm/Warning Conditions

The owner/operator is alerted to Alarm and/or Warning conditions via the controller screen. All Alarm conditions cause the generator to shut down.

The Warning messages alert the operator to conditions which do not disable the unit or require immediate correction.

The possible Alarm/Warning messages are listed below.

Alarm Messages	Warning Messages
• High Engine Temperature • Low Oil Pressure • Overcrank • Overspeed • RPM Sense Loss • Underspeed • Controller Fault • Ignition Fault Code • Emergency Shutdown • WIRING ERROR • Over Voltage • Under Voltage • Overload • Canbus Error • Missing Cam Pulse • Missing Crank Pulse • Low Fuel Pressure • E-Stop • Configuration Mismatch	• Low Battery • Exercise Set Error • Schedule A Maintenance • Schedule B Maintenance • Schedule C Maintenance • Battery Problem • Charger Warning • Charger Missing AC • USB Warning • Download Failure • Check Engine

NOTE: Unless correctly trained to correct and clear Alarm/Warning conditions, contact an IASD or trained service technician.

Changing Date/Time

See Navigation Menu in ***Figure 4-2*** to change date/time after activation. If power is lost (battery is disconnected/reconnected, controller fuse is removed/installed, etc.), display automatically prompts user for Date/Time. All other information is retained in memory.

Programmable Timers

User Programmable

Exercise Time

A programmable exercise time is provided. In AUTO, engine starts and runs at frequency, interval, time, and day specified. During exercise cycle, unit runs for the user programmable duration minutes and then shuts down. Transfer of loads to generator does not occur unless utility power fails or if Transfer on Exercise is enabled (3, 6, or 12 months).

Startup Delay Timer

A programmable line interrupt delay (or startup delay) timer is provided. When utility voltage fails (falls below 60% of nominal), the startup delay timer is started. If voltage rises above utility volts low threshold, timer is reset. If utility voltage remains below utility volts low threshold during the duration of the timer, unit cranks and starts.

NOTE: Factory default setting is five seconds, but is adjustable from 2 to 1,500 seconds.

Warm-Up Delay Timer

A programmable warm-up delay timer is provided. As soon as generator starts, the warm-up timer starts. When the warm-up timer expires, controller transfers load to generator (through transfer switch) if utility voltage is less than 80% of nominal. If utility voltage is greater than threshold at expiration of warm-up timer, load is not transferred to generator and a cool-down period begins. At the end of the cool-down period, generator stops.

NOTE: Factory default setting is five seconds, but is adjustable from 5 to 1,500 seconds.

Firmware Updates

Over-the-air-Firmware-Updates

XG series generators for defined markets include cellular connectivity standard. This capability will enable over-the-air firmware updates to be completed. No effort is required by the generator owner.

USB Port for Firmware Updates

A USB port is located beneath the rubber flap on the controller. It is provided for firmware updates when over-the-air-firmware-updates are not possible. This could be due to the lack of a reliable cellular or Wi-Fi connection or the lack of a connectivity device entirely. Firmware updates must be performed by an IASD in this situation.

IMPORTANT NOTE: USB port is intended for use with a USB thumb drive only. USB port is not intended for charging devices such as phones or laptops. Do not connect any consumer electronics to USB port. Contact an IASD for any firmware updates.

Battery Charger

NOTE: Battery charger is integrated into the Power Zone 410 controller.

The battery charger verifies:

- Output is continually optimized to promote maximum battery life.
- Charging levels are safe.

NOTE: A warning message is displayed on the LCD when the battery requires service.

Transfer Switch Automatic Operation

In AUTO, generator starts automatically when utility source voltage drops below preset level. Loads are transferred to standby power source once unit starts.

Proceed as follows to select automatic operation:

1. Verify transfer switch main contacts are set to UTILITY (loads connected to utility power source).
2. Verify normal utility power source voltage is available to transfer switch terminal lugs N1, N2, and N3 (if 3-phase).
3. Set generator MLCB (generator disconnect) to OFF (OPEN), if equipped.
4. Press AUTO on the controller. A green LED illuminates to verify system is in AUTO.

3-Phase Sensing Kit for RTS Transfer Switches

3-phase Voltage Sensing Kits are required for RTS Transfer Switches when used with the Power Zone 410 controller. Kits are available for 208/120 and 240/120 V 3-phase output or 480/277 V 3-phase output. These sensing kits enable the Power Zone 410 controller to sense all 3-phases of utility main power. If any one of the phases is not detected, the controller will interpret this as a power failure and proceed to start the generator and activate the transfer switch.

See generator spec sheet to identify the required sensing kit. Installation instructions are included with the kit.

Automatic Sequence of Operation

Utility Failure

If the controller is set to AUTO when utility power fails, a ten second startup delay timer is started (user programmable). If utility power is still absent when time expires, engine cranks and starts.

Once started, a (default five second) engine warm-up delay timer starts (user programmable). When time has elapsed, load is transferred to generator. If utility power is restored (above 90% of nominal, dealer programmable) between the time engine is first started and expiration of warm-up time, controller completes the start cycle and then runs through its normal cool-down cycle (while load remains on utility source throughout the episode).

Cranking

The cyclic cranking is controlled as follows: 15 seconds crank, seven seconds rest, seven seconds crank, seven seconds rest; this sequence is repeated for a total of six crank cycles.

Load Transfer

With generator running, transfer of load is dependent upon the operating mode as follows:

Auto	• Starts and runs if utility power fails (% below nominal adjusted by dealer) for five consecutive seconds (adjustable). • Starts a five second (adjustable) engine warm-up timer. • Does not execute transfer if utility power returns before expiration of warm-up timer (but finishes warm-up and cool-down cycles). • Transfers back to utility once utility power returns (% above nominal adjusted by dealer) for 15 consecutive seconds. • Only shuts down if OFF is pressed or an alarm shutdown occurs. • Once utility power returns, starts a cool-down cycle before it shuts down. • XG03245 and XG04045 each have a belt-driven cooling fan; XG04845 has three electric cooling fans. The electric fans turn on when the coolant temperature reaches 194 °F (90 °C). **NOTE:** Cool-down cycle is five minutes if turbocharger equipped, one minute if naturally aspirated.
	EXERCISE
	• Only works in AUTO. • Does not exercise if generator is already running in AUTO. • During exercise cycle, transfers only if utility power fails for ten consecutive seconds or if Transfer on Exercise is enabled (3, 6, or 12 month interval). • XG03245 and XG04045 each have a belt-driven cooling fan and are therefore always ON; XG04845 has three electric cooling fans which stay OFF during exercise. If the coolant temperature of the XG04845 reaches 194 °F (90 °C) during the exercise cycle, the test will stop. This is normal operation and does not indicate a problem.
Manual	• Engine cranks and runs even if utility power is present, but does not transfer to generator. • Transfers to generator if utility fails (falls below dealer adjustable % of nominal) for ten consecutive seconds. • Transfers back to utility when utility returns for 15 consecutive seconds. Engine continues to run until AUTO or OFF is pressed. • XG03245 and XG04045 each have a belt-driven cooling fan and are therefore always ON; XG04845 has three electric cooling fans which stay ON in manual mode for diagnostic purposes.

Transfer Switch Manual Operation



DANGER

Electrocution. Do not manually transfer under load. Disconnect transfer switch from all power sources prior to manual transfer. Failure to do so will result in death or serious injury, and equipment damage.

(D000132)

Prior to automatic operation, manually exercise transfer switch to verify there is no binding or interference with correct operation of the mechanism. Manual operation of transfer switch is required if automatic operation fails.

IMPORTANT NOTE: Always use applicable transfer switch owner's manual for actual manual transfer switch operation instructions. The information presented here describes a typical V-style transfer switch, which is not used for 3-phase applications. See specific manual for 3-phase transfer switch.

Transfer to Generator Power

Proceed as follows to manually transfer to standby power and start the generator when utility power fails:

1. Press OFF on the controller. A red LED illuminates to verify system is OFF.
2. Set generator MLCB (generator disconnect) to OFF (OPEN), if equipped, or other appropriate disconnecting means to verify the generator is unloaded.
3. Turn off utility power supply to transfer switch using the means provided (such as a utility circuit breaker).
4. See ***Figure 4-3***. Use the manual transfer handle (A) inside the transfer switch to set main contacts to STANDBY (loads connected to standby power source) (C).

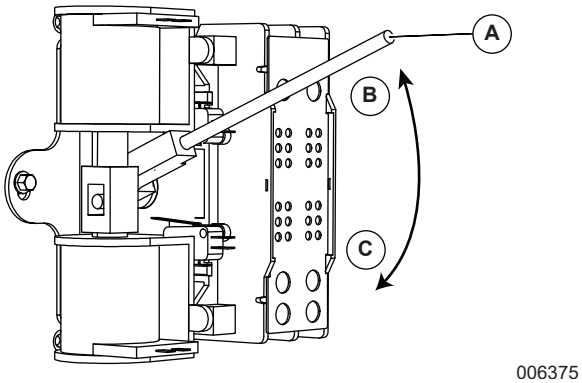

Figure 4-3. Manual Transfer Switch Operation (Typical)

5. Press MANUAL on the controller. Engine cranks and starts.
6. Allow engine to run for two minutes to bring it up to normal operating temperature.
7. Set generator MLCB (generator disconnect) to ON (CLOSED) or other means to apply load to the generator.

Transfer Back to Utility Power

Proceed as follows to manually transfer back to utility power and shut down generator when utility power is restored:

NOTE: Verify utility voltage has returned and is at the correct value.

1. Set generator MLCB (generator disconnect) to OFF (OPEN), if equipped, or other appropriate disconnecting means to verify the generator is unloaded.
2. Allow engine to run for two minutes at no-load to allow it to correctly cool down.
3. Press OFF on the controller to shut down engine.
4. Verify utility power supply to transfer switch is turned off.
5. See ***Figure 4-3***. Use the manual transfer handle inside the transfer switch to set main contacts to UTILITY (loads connected to utility power source) (B).
6. Turn on utility power supply to transfer switch using the means provided (such as a utility circuit breaker).
7. Press AUTO on the controller. A green LED illuminates to verify system is in AUTO.
8. Set generator MLCB (generator disconnect) to ON (CLOSED), if equipped.

This page intentionally left blank.

Section 5: Maintenance

Component Locations

NOTE: The XG04845 unit is depicted in the artwork used in this manual. The location and appearance of some components may vary among models.

The viewing window side of the enclosure is identified as the rear of the generator. The right and left sides are identified by standing at the rear and looking towards the front of the unit.

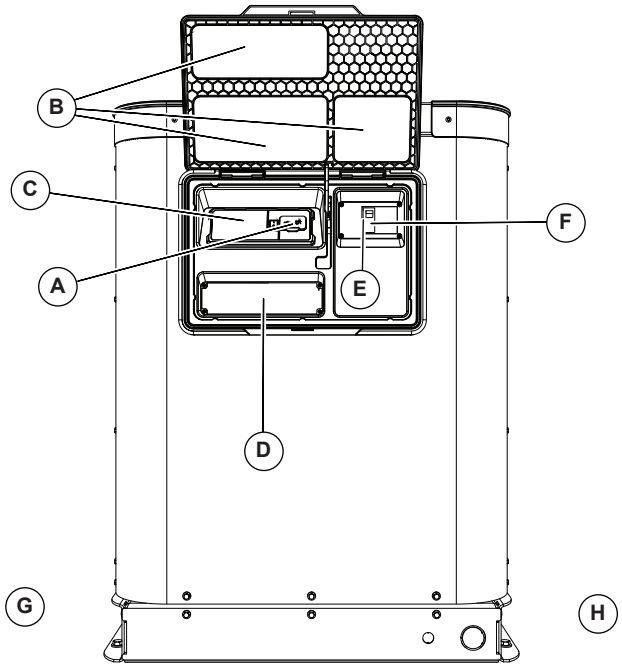

A	7.5 Amp Fuse and USB Port
B	Viewing Windows
C	Power Zone 410 Controller
D	NFPA 110 Controller Module Expansion Cover
E	MLCB Lockout
F	Generator MLCB (Generator Disconnect)
G	Front (Service Left) Side
H	Rear (Service Right) Side

019301

Figure 5-1. Right (Service Rear) Side View

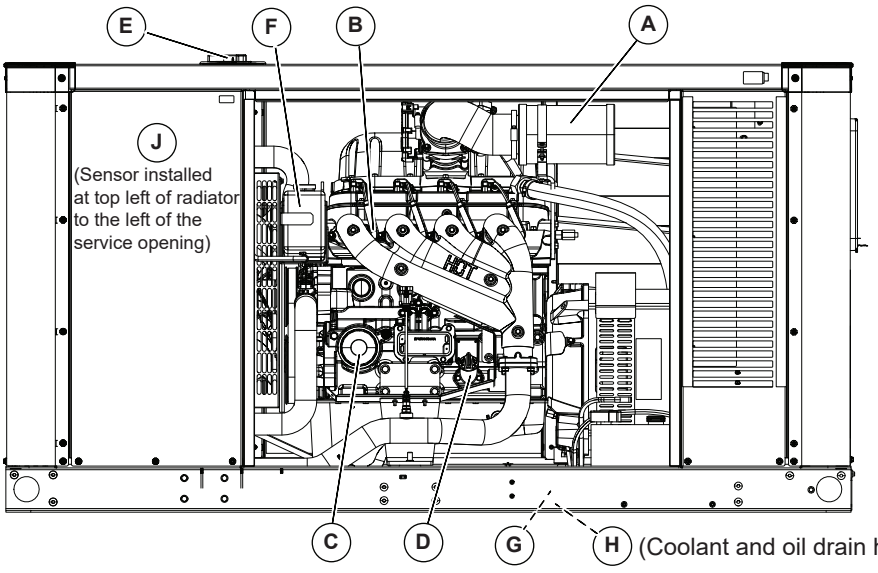

XG04845 shown here

A	Air Filter Element
B	Spark Plugs
C	Oil Filter
D	Oil Level Fill Cap and Dip Stick
E	Coolant Fill
F	Coolant Overflow Tank
G	Oil Drain Hose (Located Inside Frame)
H	Coolant Drain Hose (Located Inside Frame)
J	Coolant Level Sensor

019308

Figure 5-2. Front (Service Left) Side View

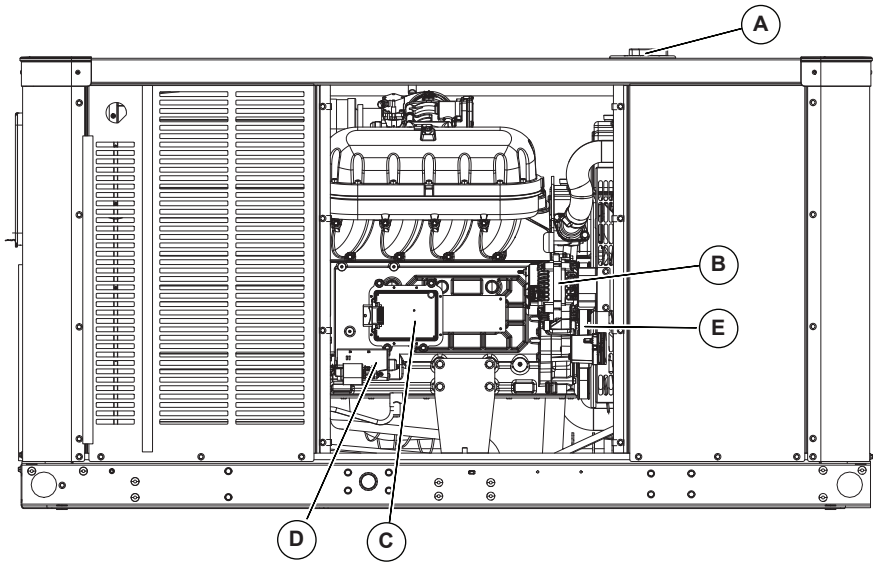

A	Coolant Fill
B	Charge Alternator
C	Engine Control Unit (ECU)
D	Starter Motor
E	Accesory Drive Belt

019366

Figure 5-3. Rear (Service Right) Side View

NOTE: All normal maintenance and service items are easily accessible for consumer convenience. Wherever possible, touch points are colored orange to provide for quick and easy recognition.

Maintenance

⚠WARNING

Equipment damage. Only qualified service personnel may install, operate, and maintain this equipment. Failure to follow proper installation requirements could result in death, serious injury, and equipment or property damage.

(W000182)

Regular maintenance will improve performance and extend engine/equipment life. Generac Power Systems, Inc. recommends that all maintenance work be performed by an Independent Authorized Service Dealer (IASD). Regular maintenance, replacement, or repair of the emissions control devices and systems may be performed by any repair shop or person of the owner's choosing. To obtain emissions control warranty service free of charge, the work must be performed by an IASD. See the emissions warranty.

It is important to perform all maintenance at the interval specified in ***Service Maintenance Schedule***. This verifies safe and correct operation, as well as compliance with applicable emissions standards.

Regular Maintenance Service Points

- Oil level check: See ***Inspecting Lubricating Oil Level and Drain Hose***.
- Oil drain: See ***Replacing Lubricating Oil and Oil Filter***.
- Oil filter change: See ***Replacing Lubricating Oil and Oil Filter***.
- Oil fill: See ***Replacing Lubricating Oil and Oil Filter***.
- Air filter change: See ***Replacing Air Filter Element***.
- Spark plug change: See ***Cleaning/Gapping/ Replacing Spark Plugs***.
- Coolant drain: See ***Draining and Flushing Coolant System***.
- Coolant fill: See ***Draining and Flushing Coolant System***.

Service Maintenance Schedule

Observe the maintenance tasks and intervals shown in the table below.

Service	25 Hours Engine Break-In	Daily WhenRunning Continuously	Schedule A Every Year or 150 Hours	Schedule B Every 2 Years or 300 Hours	Schedule C Every 1,000 Hours
Inspect enclosure slots and openings		•	•	•	•
Inspect fuel hoses		•	•	•	•
Inspect coolant level and hoses		•	•	•	•
Inspect radiator for clogging		•	•	•	•
Inspect lubricating oil level and drain hose		•	•	•	•
Replace lubricating oil and oil filter	•		•	•	•
replace battery every three years*					
Inspect accessory drive belt for wear or damage			•	•	•
Replace air filter element			•	•	•
Drain/flush coolant system				•	•
Clean coolant level sensor				•	•
Replace spark plugs				•	•
Tighten critical fasteners					•
Replace accessory drive belt					•

* Replace battery every two years in extreme conditions.

NOTE: If the unit reaches a Schedule A or Schedule B maintenance interval with 900 to 999 total hours, have an IASD perform the Schedule C maintenance tasks as well (and reset the A-B-C / Year maintenance schedule counter).

Removing From Service

⚠WARNING

Accidental Start-up. Disconnect the negative battery cable, then the positive battery cable when working on unit. Failure to do so could result in death or serious injury.

(W000130)

For safety, follow the steps below prior to inspection, maintenance, or service.

IMPORTANT NOTE: If currently experiencing a utility outage, see *Removal From Service During Utility Outage* for special instructions.

1. Open viewing window. See *Opening the Control Panel Cover Viewing Window*.
2. See *Figure 5-4*. Set generator MLCB (generator disconnect) to OFF (OPEN), if equipped.

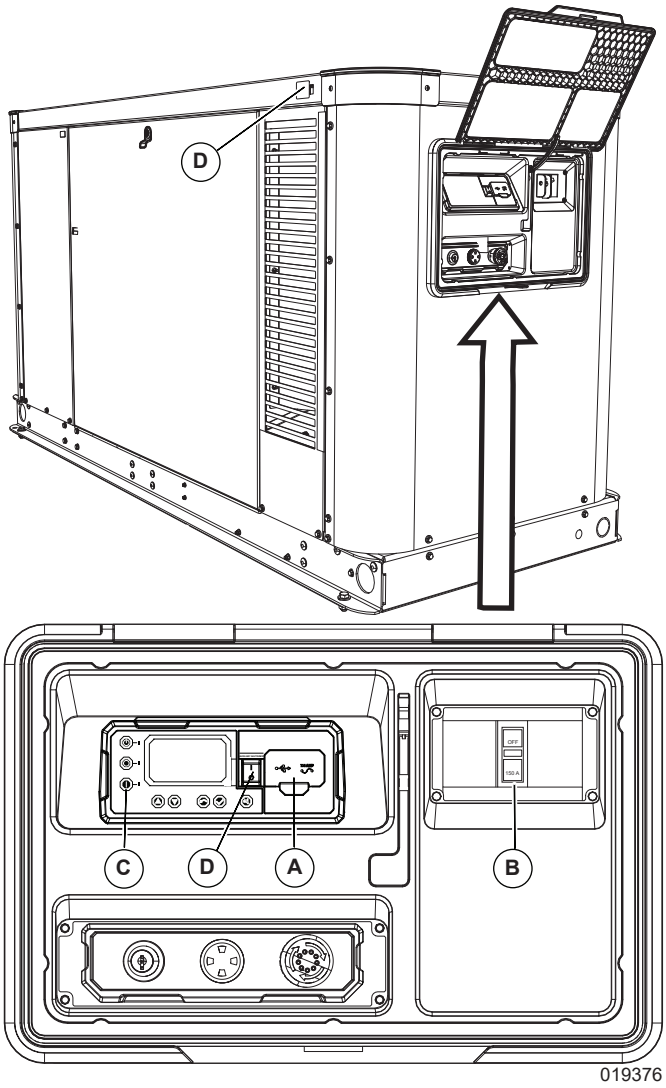

Figure 5-4. Generator Control Panel

3. See ***Figure 5-4***. Verify both generator emergency shutdown switches (D) are OFF.
4. Press OFF on the controller (C). A red LED illuminates to verify system is OFF.
5. Remove T1 fuse from transfer switch.
6. Pull up rubber flap (A) covering fuse holder and remove 7.5 amp fuse.
7. Disconnect negative (-) battery cable.
8. Place a DO NOT OPERATE tag or placard on both the control panel and transfer switch.
9. If unit has been running, remove service access panel and wait at least ten minutes for engine to cool.

25 Hour Break-In

Perform the following task:

- Replace lubricating oil and oil filter. After break-in period, it is recommended to use Generac's proprietary 5W-20 oil for continuous use. It is specifically formulated for use in gaseous powered Generac generators.

NOTE: See ***Replacing Lubricating Oil and Oil Filter*** under ***Schedule A Maintenance***.

Daily Maintenance

Perform the following tasks daily when the generator is running continuously such as during a utility outage:

- Inspect enclosure slots.
- Inspect fuel lines.
- Inspect coolant level and hoses.
- Inspect radiator for clogging.
- Inspect lubricating oil level and drain hose.

NOTE: See ***Inspecting the Enclosure Slots*** through ***Inspecting Coolant Level and Hoses*** under ***Schedule A Maintenance***.

Schedule A Maintenance

NOTE: Perform Schedule A maintenance once each year or after 150 hours of service, whichever comes first.

NOTE: The XG04845 unit is depicted in the artwork used in this manual.

Schedule A Maintenance Item Locations

NOTE: The maintenance access panel side is identified as the front (service left). The control panel is therefore on the right (service rear) side of the generator. The exhaust is on the left (service front) side of the generator.

Model	**XG03245, XG04045, and XG04845**
Engine	**4.5 L NA**
Coolant overflow reservoir	Front (Service Left)
Oil dipstick	Front (Service Left)
Oil drain hose	Front (Service Left)
Oil filter	Front (Service Left)
Oil fill cap	Front (Service Left)
Battery	Front (Service Left)
Fan belt	Rear (Service Right)
Air filter element	Front (Service Left)

Preliminary Instructions

1. See ***Removing From Service***.
2. Remove maintenance access panel. See ***Removing the Access Panels***.
3. Remove negative battery cable (black) from negative (-) battery terminal.

Inspecting the Enclosure Slots

Proceed as follows to inspect enclosure slots:

1. Verify intake and exhaust slots and openings are clean and unobstructed. Keep clear of leaves, grass, snow, and debris.
2. Wipe exterior surfaces clean using a damp cloth.
3. Loosen dirt, oil, etc. with a soft bristle brush.
4. Remove loose dirt and debris using a vacuum cleaner, or low pressure compressed air (not exceeding 25 psi (172 kPa) .

NOTE: Periodically wash and wax enclosure using automotive type products. Frequent washing is recommended in salt water or coastal areas.

Inspecting the Fuel Lines



⚠WARNING

Risk of Burn. Allow the engine to cool before performing the following procedure. Failure to do so could result in serious injury.

(W000560)

Proceed as follows to inspect fuel lines:

1. Inspect fuel lines for leaks. Tighten fittings and clamps if necessary.
2. Inspect fuel lines for nicks, dents, kinks, or other damage. Replace as necessary.

Inspecting Coolant Level and Hoses



⚠WARNING

Risk of burns. Allow engine to cool before draining oil or coolant. Failure to do so could result in death or serious injury.

(W000139)

Proceed as follows to inspect the coolant level and hoses:

1. See ***Figure 5-5***. Verify coolant level is between HOT and COLD marks on the overflow reservoir.

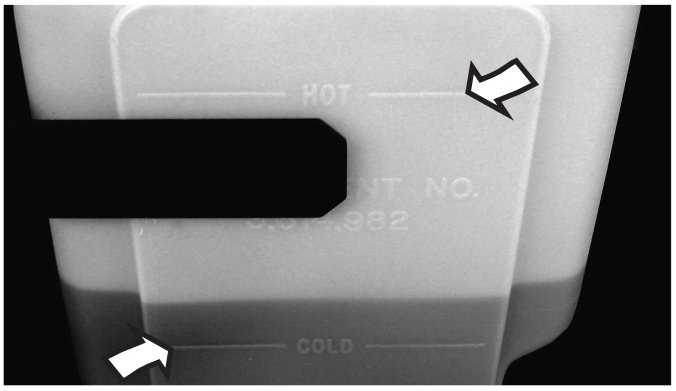

009882

Figure 5-5. Coolant Overflow Reservoir

NOTE: Coolant expands when hot. Coolant level may be higher than the HOT mark. Do not add coolant higher than the HOT mark.

2. If coolant level is below the COLD mark, remove fill cap from overflow reservoir and add coolant. See ***Coolant Water Treatment***.
3. Inspect coolant hoses for leaks. Tighten hose clamps, if necessary.
4. Inspect hoses for nicks, cuts, tears, or general deterioration. Replace as necessary.

Inspecting Radiator for Clogging



⚠WARNING

Risk of burns. Do not open coolant system until engine has completely cooled. Doing so could result in serious injury.

(W000154)

Proceed as follows to inspect radiator for clogging:

1. Use a flashlight to inspect the radiator fins.
2. Inspect for debris, accumulations of dirt, or other deposits.
3. Carefully remove any debris from radiator fins. Use warm soapy water and a soft bristled brush to remove dirt and other deposits, if necessary.

Inspecting Lubricating Oil Level and Drain Hose



⚠WARNING

Bodily injury and / or property damage. Wear personal protective equipment and avoid spills. Chemicals can cause bodily injury and / or property damage.

(W000126)

⚠WARNING

Potential of cancer. Thoroughly wash exposed areas with soap and water. Prolonged or repeated contact with used motor oil has been shown to cause cancer in laboratory animals.

(W000127)

⚠WARNING

Skin Irritation. Avoid prolonged or repeated contact with used motor oil. Used motor oil has been shown to cause skin cancer in laboratory animals. Thoroughly wash exposed areas with soap and water.

(W000210)

NOTE: If changing engine lubricating oil and filter, see ***Replacing Lubricating Oil and Oil Filter***.

Proceed as follows to inspect oil level and oil drain hose:

1. Follow the '***Removing From Service***' procedure. Wait at least ten minutes to verify oil has fully drained into oil pan.

   NOTE: The most accurate oil level readings are obtained when engine is cold.

2. See ***Figure 5-2*** and ***Figure 5-6***. Remove oil dipstick (D) and wipe dry with a clean, lint free cloth.

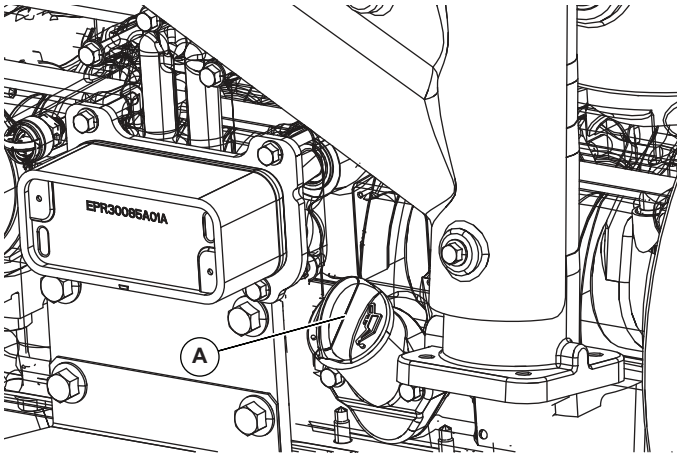

Figure 5-6. Oil Dipstick Location

3. Slowly insert oil dipstick into oil dipstick tube.
4. Verify oil dipstick is fully seated in oil dipstick tube.

   NOTE: Some oil dipsticks require more effort to fully seat than others.

5. Allow at least ten seconds to elapse.
6. Slowly remove oil dipstick (A).
7. See ***Figure 5-7***. Verify oil level is at or near FULL mark (B). Add oil as necessary.

   NOTE: The most common reasons for inaccurate oil level readings are:

   - Reading oil dipstick before oil has fully drained into oil pan.
   - Inserting and removing oil dipstick too quickly.
   - Reading oil dipstick when it has not been fully seated in oil dipstick tube.
   - Reading only the high level side of oil dipstick.

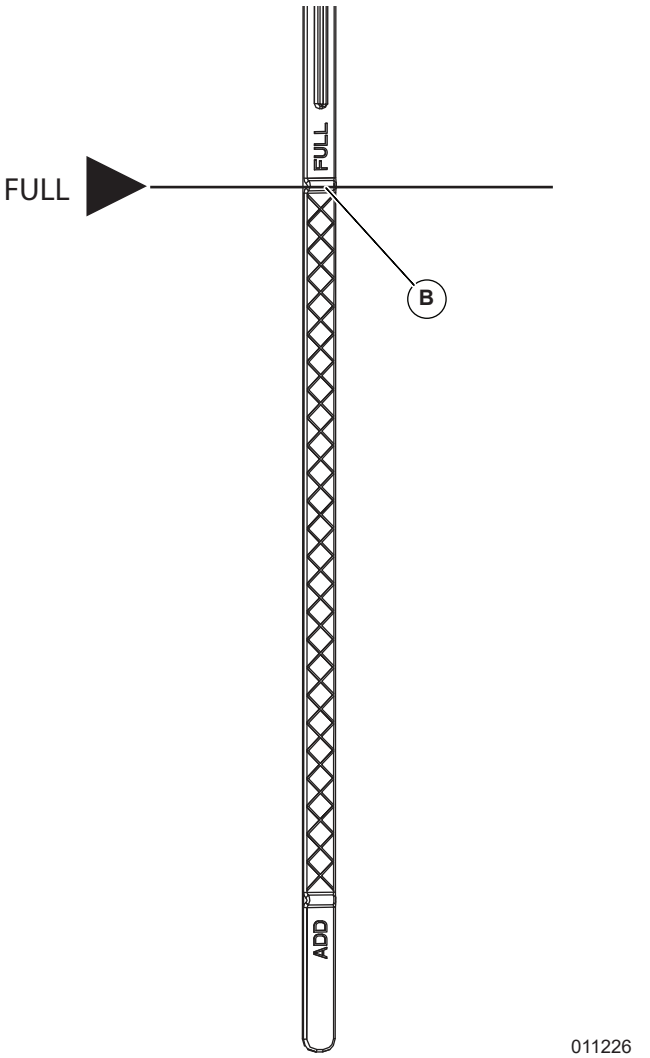

Figure 5-7. Oil Level Dipstick Full Mark

   NOTE: Observe oil level on both sides of oil dipstick. The lower of the two readings is the correct oil level measurement.

8. If necessary, remove oil fill cap and slowly add oil. Do not fill above “FULL” mark on oil dipstick.
9. Install oil dipstick and oil fill cap.
10. Install negative battery cable (black) onto negative battery (-) terminal.
11. Pull up rubber flap covering fuse holder and install 7.5 amp fuse.
12. Press MANUAL on the controller to start engine.
13. Allow engine to run for one minute.

14. Press OFF on the controller to shut down engine. A red LED illuminates to verify system is OFF.
15. Return to step 1.
16. Inspect oil drain hose for leaks. Inspect oil drain hose for nicks, cuts, tears, or general deterioration. Replace as necessary.

Replacing Lubricating Oil and Oil Filter

⚠WARNING

Risk of burns. Allow engine to cool before draining oil or coolant. Failure to do so could result in death or serious injury.

(W000139)

⚠WARNING

Skin Irritation. Avoid prolonged or repeated contact with used motor oil. Used motor oil has been shown to cause skin cancer in laboratory animals. Thoroughly wash exposed areas with soap and water.

(W000210)

NOTE: Complete this procedure once yearly, or every 150 hours of operation, whichever comes first.

Proceed as follows to replace lubricating oil and oil filter:

1. Follow the ***Removing From Service*** procedure waiting at least ten minutes to verify oil has drained into pan if the unit had been running.
2. See ***Figure 5-8***. Remove oil drain hose from holding clamp (A).

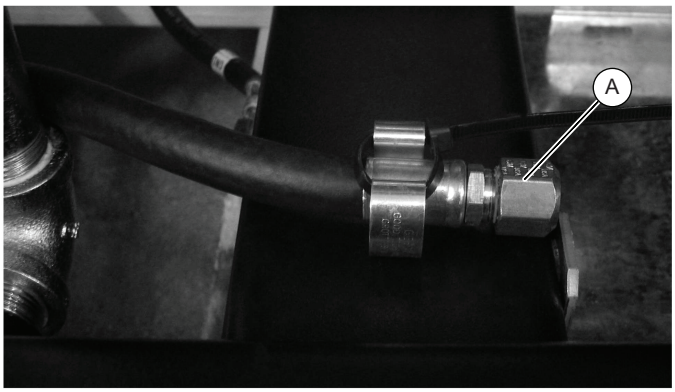

009884

Figure 5-8. Oil Drain Hose Holding Clamp

3. Use one wrench to hold hex on oil drain hose fitting (to prevent rotation), and use second wrench to remove oil drain plug.
4. Drain oil into a suitable container.
5. Install oil drain plug onto end of oil drain hose.
6. Install oil drain hose into holding clamp.
7. See ***Figure 5-9***. Turn oil filter (C) counterclockwise to remove from oil filter adapter. Wipe oil filter adapter with a clean shop towel to remove any debris.

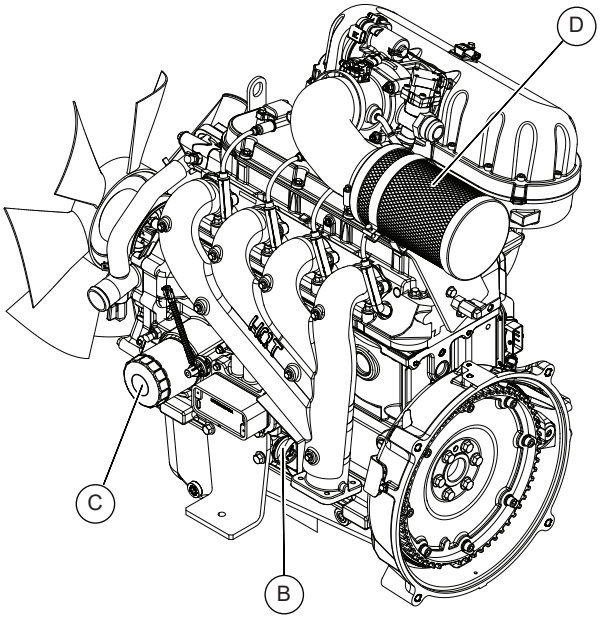

010152

Figure 5-9. Engine Oil and Air Cleaner Maintenance

B	Oil fill cap/oil dipstick
C	Oil filter
D	Air cleaner

8. Apply a light coat of clean engine oil to gasket of new oil filter.
9. Install oil filter by hand until gasket just contacts oil filter adapter. Tighten oil filter an additional three-quarters to one full turn.
10. Remove oil fill cap (B) and fill engine with the recommended quantity and type of oil. For the XG03245, XG04045, and XG04845 with the 4.5 L NA engine, use 11.6 qt (11 L).
11. Install oil fill cap.
12. Install negative battery cable (black) onto negative (-) battery terminal.
13. Pull up rubber flap covering fuse holder and install 7.5 amp fuse.
14. Press MANUAL on the controller to start engine.
15. Allow engine to run for one minute. Inspect for leaks while engine is running.
16. Press OFF on the controller. A red LED illuminates to verify system is OFF.
17. Wait ten minutes for engine to cool and to allow oil to drain back to oil pan.
18. Check oil level and add oil as necessary. See ***Inspecting Lubricating Oil Level and Drain Hose***.

19. Install oil fill cap.

NOTE: Dispose of used oil and oil filter in accordance with local, state, or national laws.

Checking Battery Condition/Fluid Level

Checking Condition and Cleaning

Proceed as follows to check battery condition and clean battery:

1. See ***Figure 3-3*** for illustration. Verify top of battery is clean and dry. Dirt and electrolyte on top of the battery can cause battery to self-discharge. Clean battery top with a solution of baking soda (sodium bicarbonate) and water (5 tsp per 1 quart [25 ml per 1 liter] of water). When solution stops bubbling, rinse off the battery with clean water.
2. Clean cable clamps and battery terminals using a wire brush or sandpaper to remove any oxidation.
3. Inspect battery screws, clamps, and cables for breakage, loose connections, and corrosion. Tighten and clean as necessary.
4. Inspect battery posts for melting or damage caused by over tightening.
5. Inspect battery for discoloration, raised top, or a warped or distorted case, which might indicate battery has been frozen, overheated, or overcharged.
6. Inspect battery case for cracks or leaks.
7. Check battery fluid level of unsealed batteries. See ***Checking Battery Fluid Level***.
8. Verify battery state of charge. See ***Verifying Battery State of Charge***.

Checking Battery Fluid Level

⚠WARNING

Risk of burns. Batteries contain sulfuric acid and can cause severe chemical burns. Wear protective gear when working with batteries. Failure to do so could result in death or serious injury.

(W000138)

⚠WARNING

Risk of burn. Do not open or mutilate batteries. Batteries contain electrolyte solution which can cause burns and blindness. If electrolyte contacts skin or eyes, flush with water and seek immediate medical attention.

(W000163)

Check the fluid level of unsealed batteries. Follow the battery manufacturer instructions for inspecting fluid level and adjusting as necessary. If necessary, fill with distilled water only. DO NOT use tap water.

Verifying Battery State of Charge

Verify the battery state of charge using a digital multimeter (DMM). Recharge and retest if state of charge is below manufacturer's recommendations. Replace battery if necessary.

Battery Replacement

Removing Battery

⚠WARNING

Electrical shock. Disconnect battery ground terminal before working on battery or battery wires. Failure to do so could result in death or serious injury.

(W000164)

⚠WARNING

Accidental Start-up. Disconnect the negative battery cable, then the positive battery cable when working on unit. Failure to do so could result in death or serious injury.

(W000130)

Proceed as follows to remove battery:

1. Remove negative battery cable (black) from negative (-) battery terminal.
2. Remove positive battery cable (red) from positive (+) battery terminal.
3. See ***Figure 5-10***. Install rubber protective cover over positive (+) battery terminal (A).

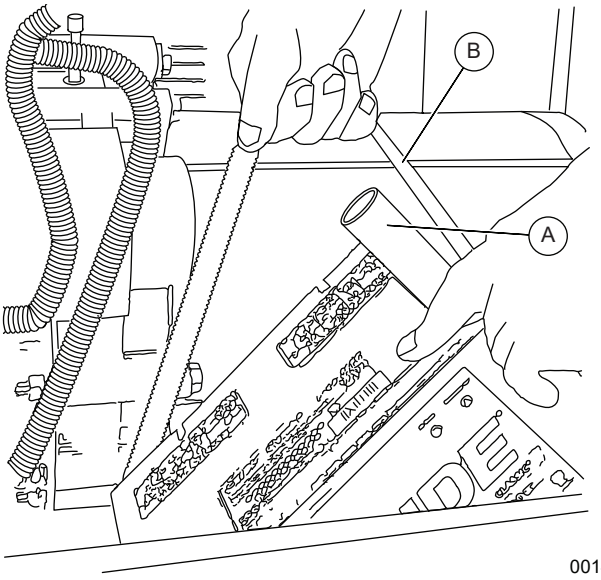

Figure 5-10. Remove/Install Battery

4. Release buckle on nylon strap securing battery to generator frame.

5. Grasp battery strap (B), and lift battery from battery tray.
6. Remove rubber protective cover from positive (+) battery terminal.

Installing Battery

⚠WARNING

Accidental Start-up. Disconnect the negative battery cable, then the positive battery cable when working on unit. Failure to do so could result in death or serious injury.

(W000130)

Proceed as follows to install battery:

1. Install rubber protective cover over positive (+) battery terminal.
2. Grasp battery strap and lift battery.
3. Set battery onto battery tray.
4. Tighten two screws with nylon washers to secure hold-down clamp to battery tray.
5. Remove rubber protective cover from positive (+) battery terminal.
6. Install positive battery cable (red) to positive (+) battery terminal.
7. Install negative battery cable (black) to negative (-) battery terminal.

NOTE: If continuing with Schedule A maintenance procedures, leave negative battery cable (black) disconnected.

Inspecting Accessory/Drive Belt

NOTE: XG03245, XG04045, and XG04845 units are provided with an automatic belt tensioner and do not need adjustment. Periodic belt inspection should be done to verify belt condition.

Proceed as follows to inspect accessory/drive belt condition:

1. Perform visual inspection as follows:
   - Inspect belt for cracks, fraying, excessive wear, or other damage.
   - Verify belt is free of grease and oil.
   - Replace belt if contaminated, damaged, frayed, or worn.

   NOTE: Use a solution of soap and warm water to clean pulleys, if necessary. Avoid use of solvents, but if used, always follow by a soap and water wash.
2. See ***Figure 5-11***. Inspect belt and rotating components.

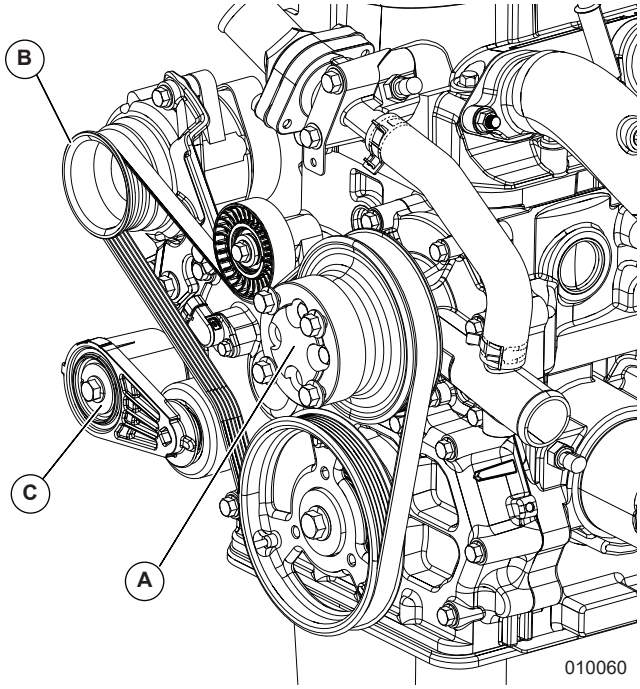

Figure 5-11. Accessory/Drive Belt

A	Water pump pulley
B	Alternator pulley
C	Automatic tensioner

Replacing Air Filter Element

Proceed as follows to replace air filter element:

1. See ***Figure 5-12***. Remove nut (B) and bolt (C) from air filter clamp, and loosen elbow clamp (D) to release air cleaner.

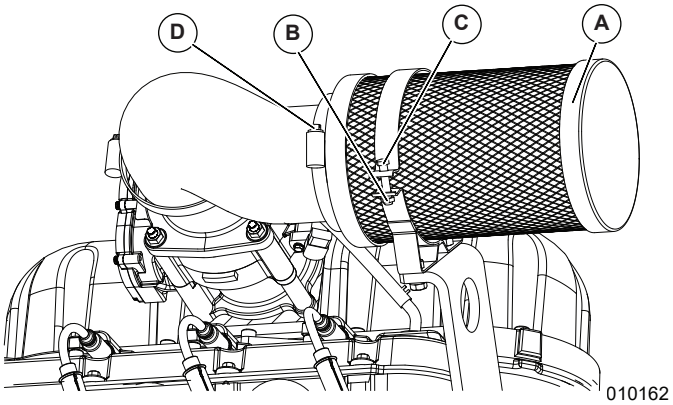

Figure 5-12. Air Cleaner Cover and Filter Element

2. Remove air filter element (A) and discard.
3. Thoroughly clean elbow of any dust, dirt, or debris.
4. Place **new** air filter element into elbow clamp.
5. Install elbow clamp over clamping surfaces and tighten. Install nut and bolt from air filter clamp, and tighten until snug.

NOTE: Service kits are available from an IASD.

Final Instructions

Proceed as follows if only performing Schedule A maintenance procedures:

1. Install negative battery cable (black) onto negative battery (-) terminal.
2. Install left and right side access panels. See ***Figure 5-1***.
3. See ***Return To Service***.

Schedule B Maintenance

NOTE: Perform Schedule B maintenance every two years or after 300 hours of service, whichever comes first. Before proceeding below, first perform all tasks listed under ***Schedule A Maintenance***.

NOTE: The XG04845 unit is depicted in the artwork used in this manual. For the general location of components in all other models, see ***Schedule B Maintenance Item Locations***.

Schedule B Maintenance Item Locations

NOTE: The maintenance access panel side is identified as the front (service left). The control panel is therefore on the right (Service rear) side of the generator. The exhaust is on the left (service front) side of the generator.

Model	**XG03245, XG04045, and XG04845**
Engine	**4.5 L NA**
Coolant drain hose	Front (Service left)
Radiator fill cap	Top
Coolant overflow reservoir	Front (Service left)
Spark plugs	Front (Service left)
Coolant level sensor	Front (Service left)

Draining and Flushing Coolant System



⚠WARNING

Risk of burns. Allow engine to cool before draining oil or coolant. Failure to do so could result in death or serious injury.

(W000139)

Proceed as follows to drain and flush the coolant system:

1. Disconnect and empty coolant overflow reservoir.
2. Install and connect coolant overflow reservoir.
3. Rotate and remove plastic cover at top of enclosure.
4. Slowly unscrew radiator cap.
5. Locate drain screw at bottom left side of radiator.

NOTE: If unit is not equipped with drain hose, install suitable length of rubber hose to drain screw.

6. See ***Figure 5-13***. Rotate hex fitting to open drain screw (A).

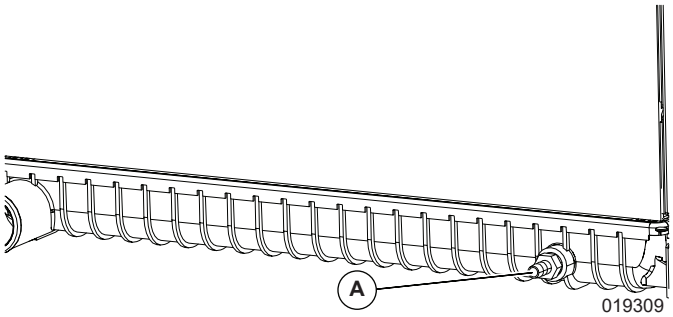

Figure 5-13. Radiator Drain Location

NOTE: Drain hose removed for illustration purposes.

7. Remove coolant drain hose from holding clamp.
8. Use wrench to hold hex on coolant hose fitting (to prevent rotation), and use second wrench to remove drain plug.
9. Drain coolant into a suitable container.
10. Install drain plug at end of coolant drain hose.
11. Install coolant drain hose in holding clamp.
12. Rotate hex fitting to close radiator drain screw.

    STOP - Before refilling radiator with coolant, complete the *Cleaning Coolant Level Sensor* maintenance steps first.

13. See ***Figure 5-14***. Fill radiator (B) with de-ionized or distilled water (tap water contains minerals which can affect internal engine and cooling system components) and a commercially available cooling system flushing or cleaning product as required. For the XG03245, XG04045, and XG04845 generators with the 4.5 L NA engine, use 2.9 US gal (11 L).

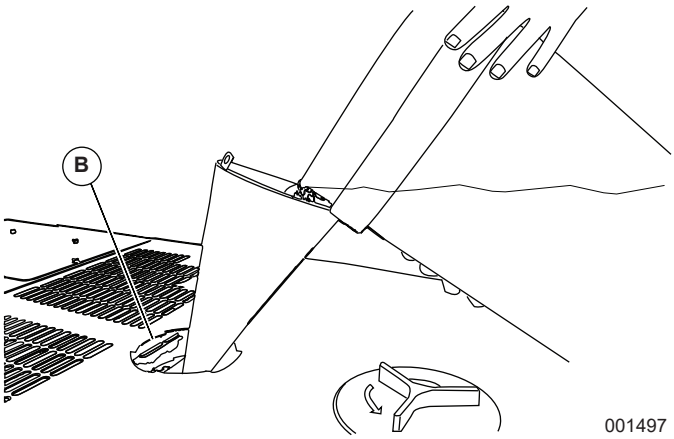

Figure 5-14. Filling Coolant System

14. Install radiator cap.

15. Press MANUAL on the controller to start engine. A blue LED illuminates to verify system is in MANUAL.
16. Allow engine to run until thermostat opens, as indicated by heating of top radiator hose.
17. Inspect coolant hoses for leaks. Tighten clamps, if necessary.
18. Press OFF on the controller to shut engine down.
19. Allow engine to cool.
20. Repeat steps 4 – 12 to drain cooling system.
21. Obtain recommended quantity and type of coolant. See ***Coolant Water Treatment***. Slowly unscrew radiator cap. Slowly pour coolant into filler neck until radiator is full. Repeat steps 14 – 17 and top off radiator and overflow bottle as necessary.
22. Add coolant to the overflow reservoir. See ***Inspecting Coolant Level and Hoses***.
23. Install plastic cover at top of enclosure and rotate until tight.
24. Inspect hoses for nicks, cuts, tears, or general deterioration. Replace as necessary.

Cleaning Coolant Level Sensor

Proceed as follows to clean the coolant level sensor to remove any contamination on the surface which could cause a failure or fault.

NOTE: Only proceed with cleaning the sensor when the generator and coolant are at ambient temperature. Remove the sensor only when the coolant has been drained from the radiator. Otherwise coolant will leak out when the sensor is removed from the radiator.

1. After the coolant has been drained from the radiator during the previous maintenance step, disconnect the wire harness from the sensor.
2. See ***Figure 5-15***. Remove the coolant sensor (A) by unscrewing it from the radiator. The sensor has an NPT type thread. The radiator design may differ among generator models but the sensor is the same and in the same relative location.

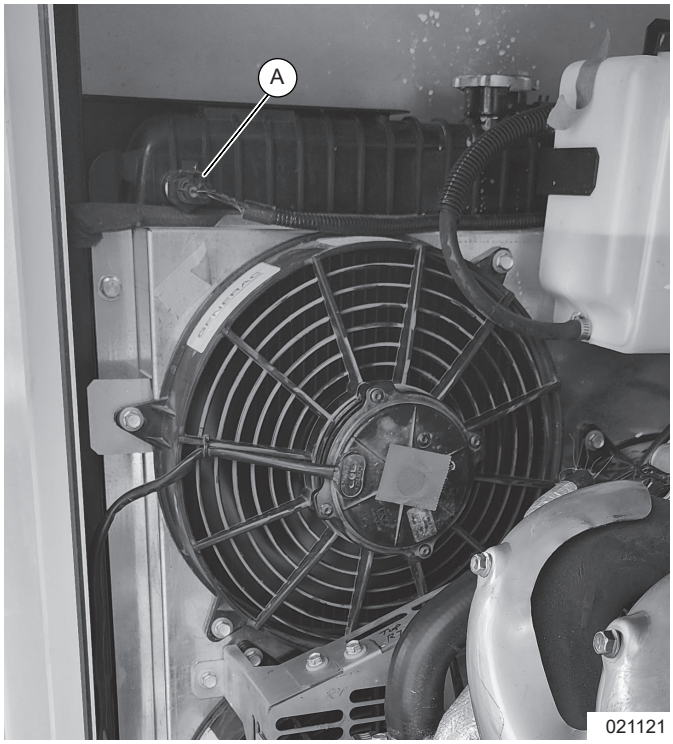

Figure 5-15. Remove Coolant Level Sensor

3. The metal portion of the sensor which is immersed in the coolant when it is installed is what needs to be cleaned. Over time, a thin film buildup of contaminants can affect the function of the sensor. It is necessary to clean the metal surface even if it appears clean.
4. See ***Figure 5-16***. Clean the metal surface (B) using a pencil eraser. This will remove any buildup which may have accumulated on the sensor surface without damaging the sensor. Clean both sides of the metal surface of the sensor in the image.

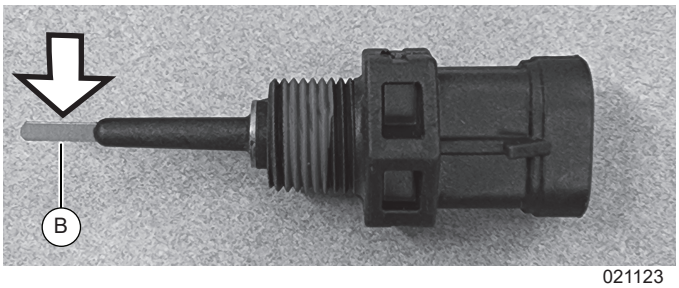

Figure 5-16. Coolant Level Sensor

5. After the sensor surface has been cleaned, the sensor can be re-installed in the radiator. The sensor as supplied has thread sealant on it. However, when it is removed from the radiator for this cleaning step, the original thread sealant cannot be relied upon to make a reliable seal. Instead apply a non-permanent, removable thread sealant to the sensor threads so it can be removed at a later time. Avoid applying excess sealant which can get into the radiator.

6. Screw the sensor into the radiator until is secured making a water tight seal. Care should be taken since the threaded portion of the sensor is non-metallic and can be damaged if overtightened.
7. Plug the wire harness into the sensor. The coolant level sensor has now been completely re-installed. The radiator can then be refilled with coolant to complete the ***Draining and Flushing Coolant System*** maintenance steps.

Cleaning/Gapping/Replacing Spark Plugs



⚠WARNING

Electric shock. Do not disconnect spark plug wires with engine running. Doing so could result in death or serious injury.

(W000140)

Proceed as follows to clean, gap, or replace spark plugs as follows:

1. Remove negative battery cable (black) from negative battery (-) terminal.
2. See ***Figure 5-17***. Remove spark plug cables (C) from spark plug terminals (D).

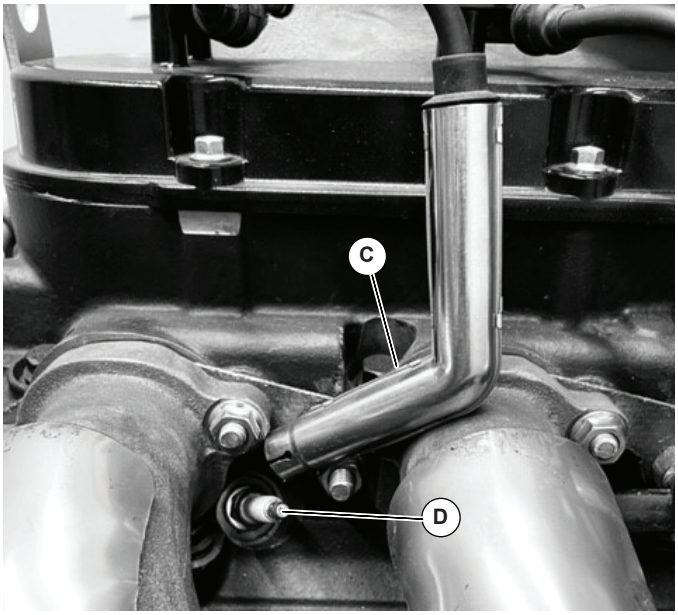

020080

Figure 5-17. Remove Spark Plug Cables

NOTE: Always grasp and pull on the boot at the terminal end of the cable when disconnecting spark plug cable from spark plug terminal. Pulling on cable portion can result in parts damage.

3. Thoroughly clean area around spark plugs.
4. Remove spark plugs from cylinder head using an appropriate spark plug socket wrench.
5. Inspect condition of threads in cylinder head and on spark plugs. If necessary, soften deposits with penetrating oil and clean out with a thread chaser.
6. Clean spark plugs using a wire brush and commercial solvent. Do not blast spark plugs. Use **new** spark plugs if necessary.
7. See ***Figure 5-18***. Inspect spark plug gap using a wire feeler gauge. Spark plug gap for generator models XG03245, XG04045, and XG04845 with the 4.5 L engine should be 0.012-0.017 in (0.31-0.45 mm).

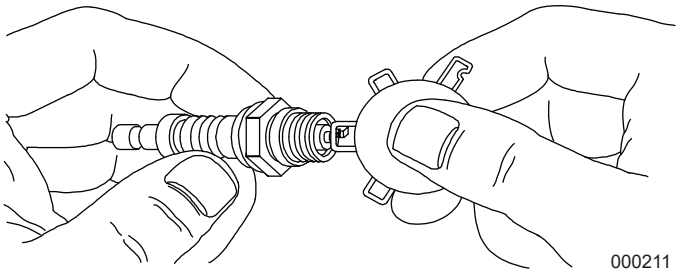

000211

Figure 5-18. Inspect Spark Plug Gap

8. See ***Figure 5-19***. Adjust gap by carefully bending ground electrode.



020074

Figure 5-19. Adjust Spark Plug Gap

9. Finger tighten spark plugs into cylinder head, and then using a spark plug socket, tighten to 28 ft-lb (38 Nm).
10. Install spark plug cables onto spark plug terminals.
11. Verify spark plug cables are captured in spark plug cable clips at top of valve cover.

Final Instructions

Proceed as follows if only performing Schedule A and Schedule B maintenance procedures:

1. Install negative battery cable (black) onto negative battery (-) terminal.
2. Install front (service left) access panels. See ***Removing the Access Panels***.
3. See ***Return To Service***.

Schedule C Maintenance

NOTE: Perform Schedule C maintenance after 1,000 hours of service. First perform all tasks listed under Schedule A Maintenance and Schedule B Maintenance before proceeding.

IMPORTANT NOTE: The following procedures require special tools and skills. Contact an IASD to perform these tasks.

1. Remove negative battery cable (black) from negative battery (-) terminal.
2. Proceed as follows:
   - Tighten critical fasteners.
   - Replace upper and lower radiator hoses.
   - Replace engine coolant bypass hoses.
   - Replace block heater hoses.

   NOTE: Reset A-B-C / Year time maintenance schedule counter using Dealer Sub Menu (password required).
3. Install negative battery cable (black) onto negative battery (-) terminal.
4. Install front access panel. Install left and right side access panels. See ***Removing the Access Panels***.
5. See ***Return To Service***.

Return To Service

Proceed as follows to return the unit to service after inspection, maintenance, or service of the generator:

1. See ***Figure 5-4***. Pull up rubber flap (C) covering fuse holder and install 7.5 amp fuse.
2. Install T1 fuse in transfer switch.
3. See ***Figure 5-4***. Verify both generator emergency shutdown switches are ON (CLOSED) (B) (D).
4. Press AUTO on the controller. A green LED illuminates to verify system is in AUTO.
5. Set generator MLCB (generator disconnect) to ON (CLOSED), if equipped.
6. Close viewing window.
7. Remove DO NOT OPERATE tag or placard from both the control panel and transfer switch.
8. Reset date/time.

Removing From Service During Utility Outage

Complete the steps listed below if the user wishes to remove unit from service to conserve fuel, reduce run hours, or to perform maintenance tasks during prolonged utility outages.

IMPORTANT NOTE: Failure to abide by this procedure can result in equipment damage.

Proceed as follows to remove generator from service while running in AUTO and online:

1. Turn utility MLCB (utility disconnect) to OFF (OPEN).
2. Open viewing window. See ***Opening the Control Panel Cover Viewing Window***.
3. Set generator MLCB (generator disconnect) to OFF (OPEN), if equipped, or other appropriate disconnecting means to verify the generator is unloaded.
4. Press OFF on the controller. A red LED illuminates to verify system is in OFF mode.

   NOTE: Complete the additional steps listed below if inspection and/or maintenance tasks are to be performed.
5. Remove T1 fuse from transfer switch.
6. Pull up rubber flap covering fuse holder and remove 7.5 amp fuse.
7. Remove negative battery cable (black) from negative battery (-) terminal.
8. Place a DO NOT OPERATE tag or placard on both the control panel and transfer switch.

Returning to Service During Utility Outage

Proceed as follows to return generator to service:

NOTE: Start with step 1 if inspection and/or maintenance tasks were performed. Start with step 5 if unit was only shut down to conserve fuel or to reduce run hours.

1. Install negative battery cable (black) onto negative battery (-) terminal.
2. Pull up rubber flap covering fuse holder and install 7.5 amp fuse.
3. Install T1 fuse in transfer switch.
4. Remove the DO NOT OPERATE tag or placard from both the control panel and transfer switch.
5. Press AUTO on the controller. A green LED illuminates to verify system is in AUTO mode. Allow generator to start and run for a few minutes.
6. Set generator MLCB (generator disconnect) to ON (CLOSED), if equipped.
7. Set utility circuit breaker to ON (CLOSED).
8. Close viewing window.

Storage

Preparing For Storage

Proceed as follows to prepare for storage if generator cannot be exercised every seven days and will be out of service longer than 90 days:

1. Open viewing window. See ***Opening the Control Panel Cover Viewing Window***.
2. Press MANUAL on the controller to start engine. A blue LED illuminates to verify system is in MANUAL.
3. Allow engine to run until it reaches normal operating temperature.
4. Press OFF on the controller. A red LED illuminates to verify system is OFF.
5. Set generator MLCB (generator disconnect) to OFF (OPEN), if equipped.
6. Pull up rubber flap covering fuse holder and remove 7.5 amp fuse.
7. Turn off utility power to transfer switch.
8. Place a DO NOT OPERATE tag or placard on both the control panel and transfer switch.
9. Wait five minutes for engine to cool.
10. Remove front (service left) access panel. See ***Removing the Access Panels***.
11. Remove oil drain hose from holding clamp.
12. Use one wrench to hold hex on oil drain hose fitting (to prevent rotation), and use second wrench to remove oil drain plug.
13. Drain oil into a suitable container.
14. Install oil drain plug onto end of oil drain hose.
15. Install oil drain hose into holding clamp.
16. Turn oil filter counterclockwise to remove from oil filter adapter.
17. Apply a light coat of clean engine oil to gasket of new oil filter.
18. Install oil filter by hand until gasket just contacts oil filter adapter. Tighten oil filter an additional three-quarters to one full turn.
19. Remove oil fill cap and fill engine with the recommended oil. See ***Engine Oil Recommendations***.
20. Install oil fill cap.

NOTE: Dispose of used oil and oil filter in accordance with local, state, or national laws.

Removing Battery



⚠WARNING

Explosion. Batteries emit explosive gases. Always disconnect negative battery cable first to avoid spark. Failure to do so could result in death or serious injury.

(W000238)

Proceed as follows to remove the battery:

1. Remove negative battery cable (black) from negative battery (-) terminal.
2. Remove positive battery cable (red) from positive battery (+) terminal.
3. Remove two screws to release battery hold-down clamp from platform.
4. Remove battery and store in a cool, dry room.
5. Install left and right side access panels. See ***Removing the Access Panels***.
6. Thoroughly clean and wipe down generator. See ***Corrosion Protection***.

Returning to Service After Storage



⚠WARNING

Explosion. Batteries emit explosive gases. Always connect positive battery cable first to avoid spark. Failure to do so could result in death or serious injury.

(W000133)

Proceed as follows to return unit to service after storage:

1. Thoroughly clean and wipe down generator. See ***Corrosion Protection***.
2. Remove left and right side access panels. See ***Removing the Access Panels***.
3. Install battery onto tray oriented with the negative (-) battery post toward the front (service left) of the enclosure.
4. Install two screws with nylon washers to secure battery hold-down clamp to tray.
5. Inspect battery. See ***Checking Battery Condition/ Fluid Level***.
6. Install positive battery cable (red) onto positive battery (+) terminal.
7. Install negative battery cable (black) onto negative battery (-) terminal.
8. Check oil level and add oil as necessary. DO NOT OVERFILL.
9. Open viewing window. See ***Opening the Control Panel Cover Viewing Window***.
10. Pull up rubber flap covering fuse holder and install 7.5 amp fuse.

11. Set generator MLCB (generator disconnect) to ON (CLOSED), if equipped.
12. Press MANUAL on the controller to start engine. A blue LED illuminates to verify system is in MANUAL.
13. Allow engine to run until it reaches normal operating temperature. Inspect for leaks while engine is running.
14. Press OFF on the controller. A red LED illuminates to verify system is OFF.
15. Install front and rear access panels. See ***Removing the Access Panels***.
16. Turn on utility power to transfer switch.
17. Press AUTO on the controller. A green LED illuminates to verify system is in AUTO.
18. Reset date/time.
19. Close the viewing window.

Attention After Submersion

Do NOT start and operate the generator if it has been submerged in water. Have an IASD thoroughly clean, dry, and inspect the generator following any submersion. If structure (home) has been flooded, it should be inspected by a certified electrician to verify there won't be any electrical problems during generator operation or when utility power is returned.

This page intentionally left blank.

Section 6: Troubleshooting

Engine Troubleshooting

Problem	Cause	Correction
Engine does not crank	Fuse blown.	Replace 7.5 amp fuse in generator controller. Correct short circuit condition if fuse blows again.
	Loose, corroded, or faulty battery cables.	Tighten, clean, or replace as necessary. Contact an IASD.
	Faulty starter contact.	
	Faulty starter motor.	
	Discharged battery.	Charge or replace battery.
Engine cranks but will not start	Out of LP fuel.	Replenish LP fuel. Turn on fuel shutoff valve.
	Faulty fuel solenoid.	Contact an IASD.
	Open F1 7.5 amp fuse.	Replace F1 7.5 amp fuse if fuse blows again. Contact an IASD.
	Open F2 15 amp fuse.	Replace F2 15 amp fuse if fuse blows again. Contact an IASD.
	Faulty fuel system.	Contact an IASD.
	No fuel supply.	Turn on fuel supply. Contact an IASD.
Engine starts hard and runs rough	Air cleaner plugged or damaged.	Inspect / replace air cleaner.
Unit is set to OFF, but engine continues to run	Faulty keypad.	Contact an IASD.
	Faulty control board.	
No AC output from generator	Generator MLCB (generator disconnect) is OFF (OPEN) if equiped.	Set generator MLCB (generator disconnect) to ON (CLOSED) if equiped.
	Generator internal failure.	Contact an IASD.
No transfer to standby after utility source failure	Faulty transfer switch coil.	Contact an IASD.
	Faulty transfer relay.	
	Transfer relay circuit open.	
	Faulty control logic board.	
Unit consumes large amounts of oil	Engine over filled with oil.	Adjust oil to correct level.
	Faulty engine breather.	Contact an IASD.
	Engine filled with incorrect oil type.	See ***Engine Oil Recommendations***.
	Damaged gasket, seal, or hose.	Inspect for oil leaks.

Controller Troubleshooting

Active Alarm	Problem	Solution
NOT ACTIVATED	Unit will not start in AUTO with utility loss.	See ***Activating the Unit***.
NONE	Unit running in AUTO but no power in house.	Check generator MLCB (generator disconnect) if equiped. Contact an IASD if generator MLCB (generator disconnect) is set to ON (CLOSED).
NONE	Unit will not start in AUTO with utility loss.	Check LCD for start delay countdown. If startup delay is greater than expected, contact IASD to adjust from 2 to 1,500 seconds.
HIGH TEMPERATURE	Unit shuts down during operation.	Inspect ventilation around intake, exhaust, and rear of generator. Contact an IASD if no obstruction is found.
OVERLOAD	Unit shuts down during operation.	Clear alarm and remove loads from generator. Put back in AUTO and restart.
RPM SENSE LOSS	Unit was running and shuts down, attempts to restart.	Clear alarm and remove loads from generator. Put back in AUTO and restart. If problem returns, contact an IASD to investigate possible fuel issue.
LOW OIL PRESSURE	Unit will not start in AUTO with utility loss.	Check oil level. Add oil per owner's manual. Contact an IASD if oil level is correct.
RPM SENSE LOSS	Unit will not start in AUTO with utility loss.	Clear alarm. From MAIN menu on the controller, navigate to BATTERY MENU. Contact an IASD if battery is GOOD. Replace battery if CHECK BATTERY is displayed.
OVERCRANK	Unit will not start in AUTO with utility loss.	Clear alarm. Attempt to start unit in MANUAL. If it does not start, or starts and runs rough, contact an IASD.
OVERSPEED	Unit will not start in AUTO with utility loss.	Contact an IASD.
UNDER VOLTAGE	Unit will not start in AUTO with utility loss.	
UNDER SPEED	Unit will not start in AUTO with utility loss.	
WIRING ERROR	Unit will not start in AUTO with utility loss.	
OVER VOLTAGE	Unit will not start in AUTO with utility loss.	
LOW BATTERY	Warning active.	Clear alarm. From MAIN menu on the controller, navigate to BATTERY MENU. Contact an IASD if battery is GOOD. Replace battery if CHECK BATTERY is displayed.
BATTERY PROBLEM	Warning active.	Contact an IASD.
CHARGER WARNING	Warning active.	
SERVICE SCHEDULE A	Warning active.	Perform SERVICE SCHEDULE A maintenance; press ENTER to clear.
SERVICE SCHEDULE B	Warning active.	Perform SERVICE SCHEDULE B maintenance; press ENTER to clear.
SERVICE SCHEDULE C	Warning active.	Perform SERVICE SCHEDULE C maintenance; press ENTER to clear.

Active Alarm	Problem	Solution
EMERGENCY SHUTDOWN	Unit will not start in AUTO with utility loss.	Verify both generator emergency shutdown switches are ON (I). See ***Generator Emergency Shutdown Switches*** for locations.
CONFIGURA-TION MISMATCH	Unit will not start in AUTO with utility loss.	Voltage configuration set in controller does not match voltage configuration for installed (VCC). Contact an IASD.

Generac Generator Connectivity Accessory, Cellular (GGCAC)

Description	Pattern	Description	Troubleshooting
Solid	—	The device is fully functional.	None.
Pulsing	On and off	The device is booting and attempting to establish a cellular connection.	This is expected behavior.
LED off	—	The device is not powered.	Verify battery is connected.
			Verify cable harness is connected to device (threaded connection is fully seated), and is connected to the generator controller.
			Replace cable harness if problem persists.
			Replace device if problem still persists.
Blinking	1 Blink	There is an issue communicating with the generator controller.	Verify cable harness is securely connected to generator controller.
			Verify generator controller is operational.
			Replace cable harness if problem persists.
	2 Blinks	There is a cellular communication error*.	Inspect environment for any metal objects or other mechanical interference which may block cellular performance.
			Clear any debris which may be contributing to signal degradation, if possible.
			Communicate location of generator installation to Generac for further investigation of the area if problem persists.

* See Generac Generator Connectivity Accessory, Cellular (GGCAC) device owner's manual for further usage and troubleshooting information.

This page intentionally left blank.

This page intentionally left blank.

Part No. A0005536684 Rev. C 09/03/2025
© 2025 Generac Power Systems, Inc.
All rights reserved
Specifications are subject to change without notice.
No reproduction allowed in any form without prior written consent from
Generac Power Systems, Inc

Generac Power Systems, Inc.
S45 W29290 Hwy. 59
Waukesha, WI 53189
1–888–GENERAC (1–888–436–3722)
www.generac.com