Service

Residential/Commercial Generator Sets



Models:

14/20/26RCA(L)

Controller:
RDC2

KOHLER Generators

TP-7093 4/26d

Notes

Table of Contents

Safety Precautions and Instructions **7**
Introduction **13**
Service Assistance **15**
Section 1. Specifications **17**
1.1 Introduction 17
1.2 Controller Specifications 17
1.3 Torque Specifications, 14/20RCA(L) Models 17
1.4 Torque Specifications, 26RCA(L) Models 19
1.5 Engine Service 19
1.6 Engine Specifications 20
1.7 Alternator Specifications 21
1.8 Service Views 22
Section 2. Scheduled Maintenance **25**
2.1 Scheduled Maintenance 25
2.1.1 Service Schedule, 14RCA(L) Models 26
2.1.2 Service Schedule, 20/26RCA(L) Models 27
2.2 Air Cleaner Service 28
2.2.1 Air Cleaner, 14RCA(L) Models 28
2.2.2 Air Cleaner, 20/26RCA(L) Models 29
2.3 Battery 30
2.3.1 Cleaning the Battery 31
2.3.2 Testing the Battery 31
2.4 Cooling System 32
2.5 Exhaust System 33
2.6 Fuel System Maintenance 33
2.7 Lubrication System 34
2.7.1 Low Oil Pressure Shutdown 34
2.7.2 Low Oil Level Shutdown (26RCA(L) Models) 34
2.7.3 Oil Check 35
2.7.4 Engine Oil Recommendation 35
2.7.5 Oil Change Procedure 36
2.7.6 Resetting the Maintenance Timer 37
2.7.7 Oil Cooler 38
2.8 Spark Plugs 39
2.9 Stepper Motor Coupling 41
2.10 Storage Procedure 42
2.10.1 Lubricating System 42
2.10.2 Fuel System 42
2.10.3 Cylinder Lubrication 42
2.10.4 Exterior Preparation 43
2.10.5 Battery 43
Section 3. Generator Reconnection **45**
3.1 Voltage Reconnection 45
3.2 12-Lead (Three-Phase) Generator Sets 46
Section 4. Controller **49**
4.1 Introduction 49
4.2 SiteTech Software 50
4.3 Controller Parameters 51
4.3.1 Controller Parameters Table 51

4.3.2 Notes on Selected Parameters 51
4.4 Controller Firmware 61
4.4.1 Firmware Version 61
4.4.2 Firmware Update 63
4.5 Controller Replacement 64
4.6 Controller Setup 68
4.7 Voltage Calibration 71
4.7.1 Calibration Using the RDC2 Controller Keypad and Menus 71
4.7.2 Calibration Using SiteTech 72
4.8 Setting KOHLER Energy Management Password (Pin) 74
Section 5. Troubleshooting 75
5.1 Introduction 75
5.2 Theory of Operation, Electronic Start Sequence 75
5.3 Initial Checks 76
5.4 USB Port and Auxiliary Winding Mini-Breaker 76
5.5 Circuit Protection 77
5.6 Emergency Stop Switch 77
5.6.1 Emergency Stop Switch Operation 78
5.6.2 Connections 79
5.7 Shutdown Prime Mover Switch (Engine Stop Switch) 80
5.8 Thermostat 81
5.9 KOHLER Energy Management Troubleshooting 82
5.10 Fuel System Troubleshooting 82
5.11 Troubleshooting Engine Hunting, 20RCA(L) Models 83
5.12 Troubleshooting Engine Hunting, 26RCA(L) Models 85
5.13 Fault Messages 85
5.13.1 Main Power Overload Shutdown 85
5.13.2 Battery Low Warnings 85
5.13.3 Faults Related to Paralleling 90
5.14 Status Messages 92
5.15 Troubleshooting Chart 94
5.16 Controller Troubleshooting 101
5.17 Troubleshooting Load Management Problems 102
5.17.1 Check Controller Firmware 102
5.17.2 Verify that the Controller Recognizes the Load Shed Kit 102
Section 6. Component Testing and Adjustment 107
6.1 Theory of Operation 107
6.2 Alternator Excitation 108
6.2.1 No to Low Voltage Operation 109
6.2.2 Erratic Voltage Regulation 109
6.2.3 Separate Excitation 109
6.3 Stator 111
6.4 Main Field (Rotor) 114
6.5 Slip Rings 116
6.6 Brushes 117
6.7 Voltage Adjustments 119
6.7.1 Voltage Regulator Average Voltage Adjustment 119
6.7.2 Volts/Hz Slope and Cut-In Frequency 120
6.7.3 Voltage Regulator Gain 121
6.8 Governor System 121
6.8.1 Operation 122
6.8.2 Initial Checks 122

6.8.3 Hunting/Surging 123
6.8.4 Governor System Operation Test 125
6.9 Frequency Adjustment 127
6.9.1 Engine Speed Gain Adjustment for the Governor 127
6.9.2 Engine Speed Adjustment for Governor 128
6.9.3 Advanced Speed Control 128
6.10 Fault Shutdown Tests 130
6.10.1 Controller Fault Shutdown Functions 130
6.10.2 Fault Shutdown Switches 133
6.11 Fuel Systems 135
6.11.1 Fuel Regulators 135
6.11.2 Fuel Solenoid Valve 136
6.11.3 Checking the Fuel Pressure 137
6.11.4 Ignition Timing Leads (14RCA(L) and 26RCA(L) Models only) 138
6.12 Fuel Conversion 138
6.12.1 Original Fuel System, 14RCA(L) 139
6.12.2 Original Fuel System, 20RCA(L) 141
6.12.3 Revised Fuel System, 14/20/26RCA(L) 142
6.13 Start (Crank) and Run Relays 145
6.14 Continuity Checks 147
Section 7. Disassembly/Reassembly 149
7.1 Stator Hardware Change 150
7.2 Initial Steps 151
7.3 Disassembly 152
7.3.1 Remove Enclosure 152
7.3.2 Generator Disassembly 158
7.4 Reassembly 165
7.4.1 Reassemble Alternator 165
7.4.2 Reassemble Exhaust System 172
7.4.3 Reinstall Enclosure 173
Section 8. Wiring Diagrams 177
Appendix A. Abbreviations 194
Appendix B. Common Hardware Application Guidelines 198
Appendix C. General Torque Specifications 200
Appendix D. Common Hardware Identification 202
Appendix E. Common Hardware List 204

Notes

IMPORTANT SAFETY INSTRUCTIONS. Electromechanical equipment, including generator sets, transfer switches, switchgear, and accessories, can cause bodily harm and pose life-threatening danger when improperly installed, operated, or maintained. To prevent accidents be aware of potential dangers and act safely. Read and follow all safety precautions and instructions. SAVE THESE INSTRUCTIONS.

This manual has several types of safety precautions and instructions: Danger, Warning, Caution, and Notice.

⚠ DANGER

DANGER indicates a hazardous situation which, if not avoided, will result in death or serious injury.

⚠ WARNING

WARNING indicates a hazardous situation which, if not avoided, could result in death or serious injury.

⚠ CAUTION

CAUTION indicates a hazardous situation which, if not avoided, could result in minor or moderate injury.

NOTICE

NOTICE is used to address practices not related to physical injury.

Safety decals affixed to the equipment in prominent places alert the operator or service technician to potential hazards and explain how to act safely. The decals are shown throughout this publication to improve operator recognition. Replace missing or damaged decals.

Accidental Starting

⚠ WARNING	**Accidental starting.** **Can cause severe injury or death.** Disconnect the battery cables before working on the generator set. Remove the negative (–) lead first when disconnecting the battery. Reconnect the negative (–) lead last when reconnecting the battery.
	

Disabling the generator set. Accidental starting can cause severe injury or death. Before working on the generator set or equipment connected to the set, disable the generator set as follows: (1) Press the generator set off/reset button to shut down the generator set. (2) Disconnect the power to the battery charger, if equipped. (3) Remove the battery cables, negative (–) lead first. Reconnect the negative (–) lead last when reconnecting the battery. Follow these precautions to prevent the starting of the generator set by the remote start/stop switch.

Battery

WARNING	
	**Sulfuric acid in batteries.** **Can cause severe injury or death.** Wear protective goggles and clothing. Battery acid may cause blindness and burn skin.

WARNING	
	**Explosion.** **Can cause severe injury or death.** **Relays in the battery charger cause arcs or sparks.** Locate the battery in a well-ventilated area. Isolate the battery charger from explosive fumes.

Battery electrolyte is a diluted sulfuric acid. Battery acid can cause severe injury or death. Battery acid can cause blindness and burn skin. Always wear splashproof safety goggles, rubber gloves, and boots when servicing the battery. Do not open a sealed battery or mutilate the battery case. If battery acid splashes in the eyes or on the skin, immediately flush the affected area for 15 minutes with large quantities of clean water. Seek immediate medical aid in the case of eye contact. Never add acid to a battery after placing the battery in service, as this may result in hazardous spattering of battery acid.

Battery acid cleanup. Battery acid can cause severe injury or death. Battery acid is electrically conductive and corrosive. Add 500 g (1 lb.) of bicarbonate of soda (baking soda) to a container with 4 L (1 gal.) of water and mix the neutralizing solution. Pour the neutralizing solution on the spilled battery acid and continue to add the neutralizing solution to the spilled battery acid until all evidence of a chemical reaction (foaming) has ceased. Flush the resulting liquid with water and dry the area.

Battery gases. Explosion can cause severe injury or death. Battery gases can cause an explosion. Do not smoke or permit flames or sparks to occur near a battery at any time, particularly when it is charging. Do not dispose of a battery in a fire. To prevent burns and sparks that could cause an explosion, avoid touching the battery terminals with tools or other metal objects. Remove all jewelry before servicing the equipment. Discharge static electricity from your body before touching batteries by first touching a grounded metal surface away from the battery. To avoid sparks, do not disturb the battery charger connections while the battery is charging. Always turn the battery charger off before disconnecting the battery connections. Ventilate the compartments containing batteries to prevent accumulation of explosive gases.

Battery short circuits. Explosion can cause severe injury or death. Short circuits can cause bodily injury and/or equipment damage. Disconnect the battery before generator set installation or maintenance. Remove all jewelry before servicing the equipment. Use tools with insulated handles. Remove the negative (–) lead first when disconnecting the battery. Reconnect the negative (–) lead last when reconnecting the battery. Never connect the negative (–) battery cable to the positive (+) connection terminal of the starter solenoid. Do not test the battery condition by shorting the terminals together.

Engine Backfire/Flash Fire

WARNING	
	**Risk of fire.** **Can cause severe injury or death.** Do not smoke or permit flames or sparks near fuels or the fuel system.

Servicing the fuel system. A flash fire can cause severe injury or death. Do not smoke or permit flames or sparks near the carburetor, fuel line, fuel filter, fuel pump, or other potential sources of spilled fuels or fuel vapors. Catch fuels in an approved container when removing the fuel line or carburetor.

Servicing the air cleaner. A sudden backfire can cause severe injury or death. Do not operate the generator set with the air cleaner removed.

Combustible materials. A fire can cause severe injury or death. Generator set engine fuels and fuel vapors are flammable and explosive. Handle these materials carefully to minimize the risk of fire or explosion. Equip the compartment or nearby area with a fully charged fire extinguisher. Select a fire extinguisher rated ABC or BC for electrical fires or as recommended by the local fire code or an authorized agency. Train all personnel on fire extinguisher operation and fire prevention procedures.

Exhaust System

⚠ WARNING	
	**Carbon monoxide.** **Can cause severe nausea, fainting, or death.** The exhaust system must be leakproof and routinely inspected.

Generator set operation. Carbon monoxide can cause severe nausea, fainting, or death. Carbon monoxide is an odorless, colorless, tasteless, nonirritating gas that can cause death if inhaled for even a short time. Avoid breathing exhaust fumes when working on or near the generator set. Never operate the generator set inside a building unless the exhaust gas is piped safely outside. Never operate the generator set where exhaust gas could accumulate and seep back inside a potentially occupied building.

Carbon monoxide detectors. Carbon monoxide can cause severe nausea, fainting, or death. Install carbon monoxide detectors on each level of any building adjacent to the generator set. Locate the detectors to adequately warn the building's occupants of the presence of carbon monoxide. Keep the detectors operational at all times. Periodically test and replace the carbon monoxide detectors according to the manufacturer's instructions.

Carbon monoxide symptoms. Carbon monoxide can cause severe nausea, fainting, or death. Carbon monoxide is a poisonous gas present in exhaust gases. Carbon monoxide is an odorless, colorless, tasteless, nonirritating gas that can cause death if inhaled for even a short time. Carbon monoxide poisoning symptoms include but are not limited to the following:

- Light-headedness, dizziness
- Physical fatigue, weakness in joints and muscles
- Sleepiness, mental fatigue, inability to concentrate or speak clearly, blurred vision
- Stomachache, vomiting, nausea

If experiencing any of these symptoms and carbon monoxide poisoning is possible, seek fresh air immediately and remain active. Do not sit, lie down, or fall asleep. Alert others to the possibility of carbon monoxide poisoning. Seek medical attention if the condition of affected persons does not improve within minutes of breathing fresh air.

Fuel System

⚠ WARNING	
	**Explosive fuel vapors.** **Can cause severe injury or death.** Use extreme care when handling, storing, and using fuels.

The fuel system. Explosive fuel vapors can cause severe injury or death. Vaporized fuels are highly explosive. Use extreme care when handling and storing fuels. Store fuels in a well-ventilated area away from spark-producing equipment and out of the reach of children. Never add fuel to the tank while the engine is running because spilled fuel may ignite on contact with hot parts or from sparks. Do not smoke or permit flames or sparks to occur near sources of spilled fuel or fuel vapors. Keep the fuel lines and connections tight and in good condition. Do not replace flexible fuel lines with rigid lines. Use flexible sections to avoid fuel line breakage caused by vibration. Do not operate the generator set in the presence of fuel leaks, fuel accumulation, or sparks. Repair fuel systems before resuming generator set operation.

Gas fuel leaks. Explosive fuel vapors can cause severe injury or death. Fuel leakage can cause an explosion. Check the LPG vapor or natural gas fuel system for leakage by using a soap and water solution with the fuel system test pressurized to 6–8 ounces per square inch (10–14 inches water column). Do not use a soap solution containing either ammonia or chlorine because both prevent bubble formation. A successful test depends on the ability of the solution to bubble.

Hazardous Noise

⚠ CAUTION	
	**Hazardous noise.** **Can cause hearing loss.** Never operate the generator set without a muffler or with a faulty exhaust system.

Hazardous Voltage/Moving Parts

⚠ DANGER	
	**Hazardous voltage.** **Will cause severe injury or death.** Disconnect all power sources before opening the enclosure.

⚠ DANGER	
	**Hazardous voltage. Moving parts.** **Will cause severe injury or death.** Operate the generator set only when all guards and electrical enclosures are in place.

⚠ WARNING	
	**Hazardous voltage. Backfeed to the utility system.** **Can cause property damage, severe injury, or death.** If the generator set is used for standby power, install an automatic transfer switch to prevent inadvertent interconnection of standby and normal sources of supply.

⚠ DANGER	
	**Hazardous voltage.** **Will cause severe injury or death.** This equipment must be installed and serviced by qualified electrical personnel.

⚠ CAUTION
Welding the generator set. **Can cause severe electrical equipment damage.** Welding on generator set will cause serious damage to engine electronic controls components. Disconnect all engine electronic control connections before welding.

Grounding electrical equipment. Hazardous voltage will cause severe injury or death. Electrocution is possible whenever electricity is present. Ensure you comply with all applicable codes and standards. Electrically ground the generator set, transfer switch, and related equipment and electrical circuits. Turn off the main circuit breakers of all power sources before servicing the equipment. Never contact electrical leads or appliances when standing in water or on wet ground because these conditions increase the risk of electrocution.

Welding on the generator set. Can cause severe electrical equipment damage. Before welding on the generator set perform the following steps: (1) Remove the battery cables, negative (–) lead first. (2) Disconnect all engine electronic control module (ECM) connectors. (3) Disconnect all generator set controller and voltage regulator circuit board connectors. (4) Disconnect the engine battery-charging alternator connections. (5) Attach the weld ground connection close to the weld location.

High voltage test. Hazardous voltage will cause severe injury or death. Follow the instructions of the test equipment manufacturer when performing high-voltage tests on the rotor or stator. An improper test procedure can damage equipment or lead to generator set failure.

Connecting the battery and the battery charger. Hazardous voltage will cause severe injury or death. Reconnect the battery correctly, positive to positive and negative to negative, to avoid electrical shock and damage to the battery charger and battery(ies). Have a qualified electrician install the battery(ies).

Short circuits. Hazardous voltage/current will cause severe injury or death. Short circuits can cause bodily injury and/or equipment damage. Do not contact electrical connections with tools or jewelry while making adjustments or repairs. Remove all jewelry before servicing the equipment.

Electrical backfeed to the utility. Hazardous backfeed voltage can cause severe injury or death. Install a transfer switch in standby power installations to prevent the connection of standby and other sources of power. Electrical backfeed into a utility electrical system can cause severe injury or death to utility personnel working on power lines.

Testing live electrical circuits. Hazardous voltage or current will cause severe injury or death. Have trained and qualified personnel take diagnostic measurements of live circuits. Use adequately rated test equipment with electrically insulated probes and follow the instructions of the test equipment manufacturer when performing voltage tests. Observe the following precautions when performing voltage tests: (1) Remove all jewelry. (2) Stand on a dry, approved electrically insulated mat. (3) Do not touch the enclosure or components inside the enclosure. (4) Be prepared for the system to operate automatically. *(600 volts and under)*

Heavy Equipment

WARNING	
	**Unbalanced weight.** **Improper lifting can cause severe injury or death and equipment damage.** Do not use lifting eyes. Lift the generator set using lifting bars inserted through the lifting holes on the skid.

Hot Parts

WARNING	
	**Hot engine and exhaust system.** **Can cause severe injury or death.** Do not work on the generator set until it cools.

Servicing the alternator. Hot parts can cause severe injury or death. Avoid touching the alternator field or exciter armature. When shorted, the alternator field and exciter armature become hot enough to cause severe burns.

Servicing the exhaust system. Hot parts can cause severe injury or death. Do not touch hot engine parts. The engine and exhaust system components become extremely hot during operation.

Servicing the engine heater. Hot parts can cause minor personal injury or property damage. Install the heater before connecting it to power. Operating the heater before installation can cause burns and component damage. Disconnect power to the heater and allow it to cool before servicing the heater or nearby parts.

Notice

NOTICE

Canadian installations only. For standby service connect the output of the generator set to a suitably rated transfer switch in accordance with Canadian Electrical Code, Part 1.

NOTICE

Electrostatic discharge damage. Electrostatic discharge (ESD) damages electronic circuit boards. Prevent electrostatic discharge damage by wearing an approved grounding wrist strap when handling electronic circuit boards or integrated circuits. An approved grounding wrist strap provides a high resistance (about 1 megohm), not a direct short, to ground.

This manual provides troubleshooting and repair instructions for the following generator set models:

- 14RCA
- 14RCAL
- 20RCA
- 20RCAL
- 26RCA
- 26RCAL

The RCA(L) generator sets are identical to the model RCA. Model RCA and RCAL generator sets are equipped with engines and alternators and the RDC2 controller. This manual may also be supplied for similar models not listed here.

Model RCA(L) generator sets are shipped with a Model RXT automatic transfer switch. See the List of Related Materials for transfer switch literature part numbers.

Information in this publication represents data available at the time of print. Discovery Energy, LLC reserves the right to change this publication and the products represented without notice and without any obligation or liability whatsoever.

Read this manual and carefully follow all procedures and safety precautions to ensure proper equipment operation and to avoid bodily injury. Read and follow the Safety Precautions and Instructions section at the beginning of this manual.

The equipment service requirements are very important for safe and efficient operation. Inspect the parts often and perform required service at the prescribed intervals. Maintenance work must be performed by appropriately skilled and suitably trained maintenance personnel familiar with generator set operation and service.

For engine service procedures not covered in this manual, refer to the Engine Service Manual.



Figure 1 Model 14/20/26RCA Generator Set

List of Related Materials

Separate manuals contain operation, and installation information not provided in this manual. Separate engine operation and service manuals are also available. The following table lists the available manual part numbers.

Generator Set Literature	Part Number
Specification Sheet, 14RCA(L)	G4-270
Specification Sheet, 20RCA(L)	G4-272
Specification Sheet, 26RCA(L)	G4-315
Installation Manual, 14/20/26RCA(L)	TP-7091
Operation Manual, 14/20/26RCA(L)	TP-7092
Parts Catalog, 14/20RCA(L)	See Note.
Engine Literature	
Engine Service Manual, CH740 (14RCA(L) models)	24 690 06
Engine Service Manual, CH1000 (20/26RCA(L) models)	62 690 01
Transfer Switch Literature	
Specification Sheet, RXT ATS	G11-140
Operation/Installation Manual, Model RXT Transfer Switch	TP-6807
Service/Parts Manual, Model RXT Transfer Switch	TP-6808
Accessory Literature	
SiteTech™ Software Operation Manual	TP-6701
Installation Instructions, Load Control Module (LCM)	TT-1574
Installation Instructions, Programmable Interface Module (PIM)	TT-1584
Instructions, USB Utility	TT-1636
Additional accessory literature is available. Refer to the documentation provided with the accessory kit.	

Note:
For the latest parts information, go to www.RehlkoPowerParts.com.

Service Assistance

For professional advice and conscientious service, please contact your nearest dealer.

- Visit the Discovery Energy, LLC website at kohlergenerators.com
- Look at the labels and decals on your product or review the appropriate literature or documents included with the product.
- Call toll free in the US and Canada 1-800-544-2444.

Notes

1.1 Introduction

The specification sheets for each generator set provide specific generator and engine information. Refer to the generator set specification sheet for ratings and other data not supplied in this manual. Consult the generator set installation manual, engine operation manual, and engine service manual for additional specifications.

Consult the generator set nameplate for specific generator set ratings.

1.2 Controller Specifications

Model 14RCA, 14RCAL, 20RCA, 20RCAL, 26RCA, and 26RCAL generator sets are equipped with the RDC2 controller. For a specific description of the controller, see the generator set operation manual.

Environmental Specifications	
Operating temperature	-30° to 70°C
Storage temperature	-40° to 85°C
Humidity	0-95% condensing
Power requirements	
Voltage	12 VDC
Current (standby state)	250 mA @ 12 VDC

1.3 Torque Specifications, 14/20RCA(L) Models

Torque Specifications	**Nm (ft. lb.)**
Alternator adapter bolts *	69 (51)
Alternator mounting bolts *	14.9 (11)
Alternator thrubolt *	85 (63)
Muffler flange bolts	24 (17.7)
Spark plug	24.4-29.8 (18-22)
Oil filter	3/4 to 1 turn after gasket contact
* See Figure 2.	

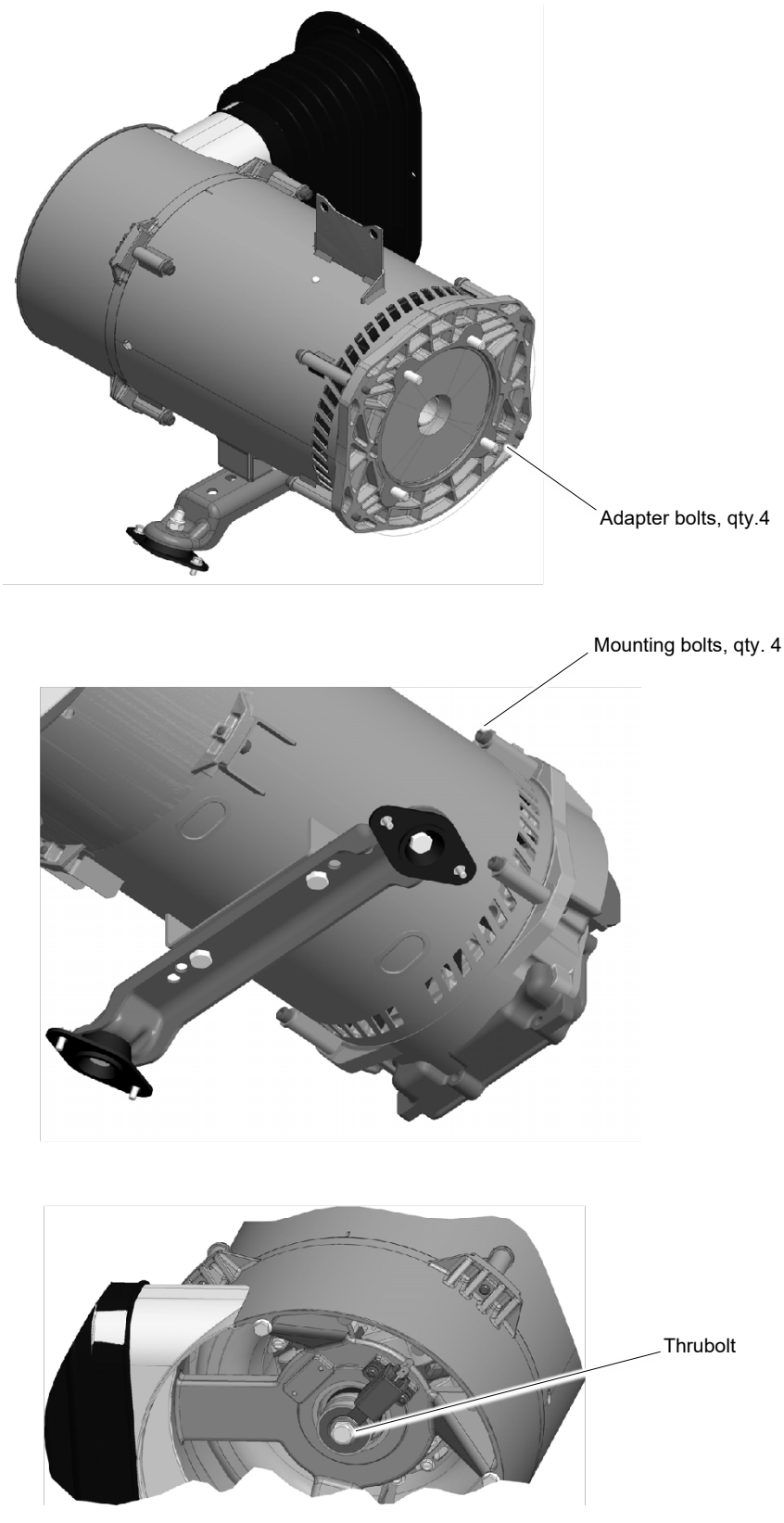

Figure 2 Alternator Bolts

1.4 Torque Specifications, 26RCA(L) Models

Torque Specifications	Nm (ft. lb.)
Alternator adapter bolts	69 (51)
Alternator mounting bolts *	14.9 (11)
Alternator thrubolt *	85 (63)
Muffler flange bolts	24 (17.7)
Spark plug	24.4-29.8 (18-22)
Fan bolts	10.9 (8)
Oil filter	3/4 to 1 turn after gasket contact
* See Figure 2.	

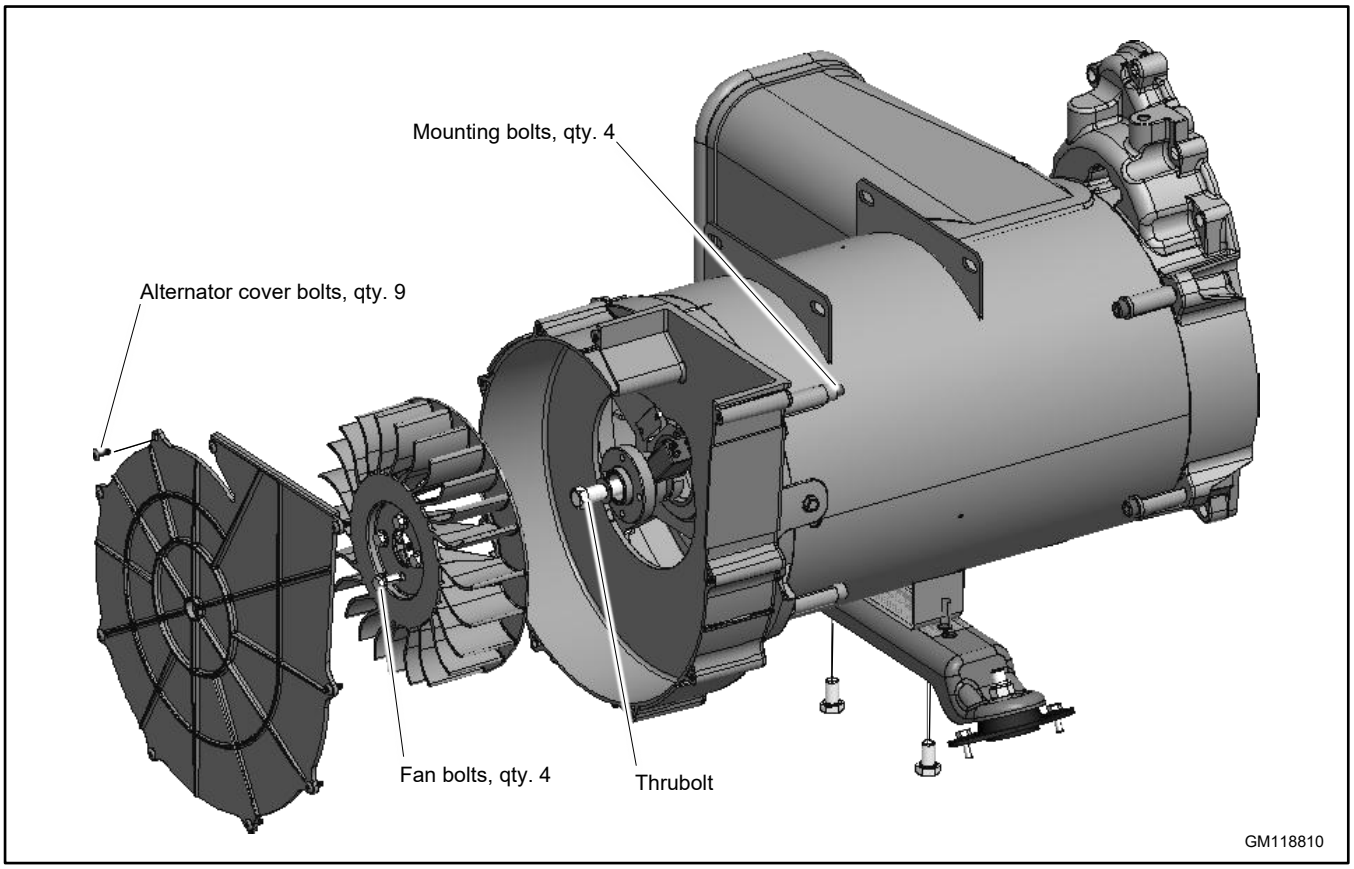

Figure 3 Alternator Bolts

1.5 Engine Service

Generator sets covered in this manual are equipped with four-cycle, twin cylinder, air-cooled Kohler engines.

For engine service information and specifications not covered in this manual, see the engine service manual. See the List of Related Materials in the Introduction section.

1.6 Engine Specifications

Engine Specification	14RCA(L) Models	20 RCA(L) Models	26 RCA(L) Models
Manufacturer	Kohler		
Model	CH740	CH1000	CH1006
Cycle	4	4	4
Number of cylinders	2	2	2
Compression ratio	9:1	8.8:1	10.5:1
Displacement, cc (cu. in.)	725 (44)	999 (61)	
Rated power, propane fuel, kW (HP)	17.6 (23.6)	23.0 (30.9)	26.1 (36.4)
Rated power, natural gas, kW (HP)	15.3 (20.5)	20.2 (27.1)	24.5 (33.0)
Rpm, 60 Hz	3600		
Bore x stroke, mm (in.)	83 x 67 (3.27 x 2.64)	90 x 78.5 (3.54 x 3.1)	
Valve material	Steel/Stellite®		
Cylinder block material	Aluminum w/cast iron liners		
Cylinder head material	Aluminum		
Piston rings	2 compression/1 oil		
Crankshaft material	Heat-treated ductile iron		
Main bearings: number, type	Qty. 2 Heavy-duty sleeve bearings		
Lubrication system	Full pressure		
Oil capacity (w/filter), L (qt.)	1.8 (1.9)	1.9 (2.0)	
Oil pressure, kPa (psi)	172-241 (25-35)		
Fuel system	LP gas or natural gas		
Minimum fuel supply pressure, kPa (in. H_2O)	NG: 1.2-2.7 (5-11) LP: 1.7-2.7 (7-11)		
Battery voltage	12 VDC		
Battery ground	Negative		
Spark plug gap, mm (in.)	0.76 (0.030)		
Ignition system	Capacitor discharge		
Starter motor	Electric, solenoid shift		
Cooling system	Air-cooled		

1.7 Alternator Specifications

Alternator Specification	14RCA(L)		20RCA(L)		26RCA(L)	
Alternator model	2F5	2G5	2F7	2G7	2F8	2G8
Frequency Hz	60	60	60	60	60	60
Phase	1	3	1	3	1	3
Number of leads	4	12	4	12	4	12
Excitation method	Static excited					
Voltage regulator type	Digital					
Coupling type	Direct					
Insulation (rotor and stator)	Epoxy varnish, vacuum impregnated; class 180 (H)					
Winding material	Copper					
Bearing, number and type	1, Sealed ball					
Brush length, new	19.05 mm (0.75 in.)					
Circuit protection Aux. winding mini-breaker	20 amps					
Rotor resistance, ohms, cold	5.2	5.2	5.6	5.6	6.4	6.4
Stator resistance, ohms,* cold:						
Single-Phase Leads 1-2, 3-4	0.06	—	0.02	—	0.03	
Single-Phase Leads 11-44	0.13	—	0.04	—	0.06	
Three-Phase Leads						
1-4, 2-5, 3-6, 7-10, 8-11, 9-12	—	0.09	—	0.06		0.03
Leads 55-66	0.60	0.19	0.44	0.18	0.41	0.16
Stator output voltage with separately excited rotor using 12-volt battery, minimum:						
Single-Phase Leads: 1-2, 3-4	105 V	—	88 V	—	62 V	
Single-Phase Leads 11-44	210 V	—	176 V	—	124 V	
Three-Phase Leads						
1-4, 2-5, 3-6, 7-10, 8-11, 9-12	—	140	—	112		96
Leads 55-66	142 V	190	117 V	150	105	130
Rotor field voltage/current readings at rated output voltage, hot						
No load	19 V/3.2 A	12 V/2.5 A	19 V/3.9 A	15 V/2.2 A	25 V/3.1 A	21 V/2.6 A
Full load	48 V/7.2 A	63 V/9.8 A	53 V/7.4 A	69 V/9.6 A	65 V/7.9 A	65 V/7.9 A

* Most ohmmeters do not give accurate readings when measuring less than 1 ohm. The stator can be considered good if a low resistance reading (continuity) is obtained and there is no evidence of shorted windings (discoloration). Do not confuse a low resistance reading with a reading indicating a shorted winding.

1.8 Service Views

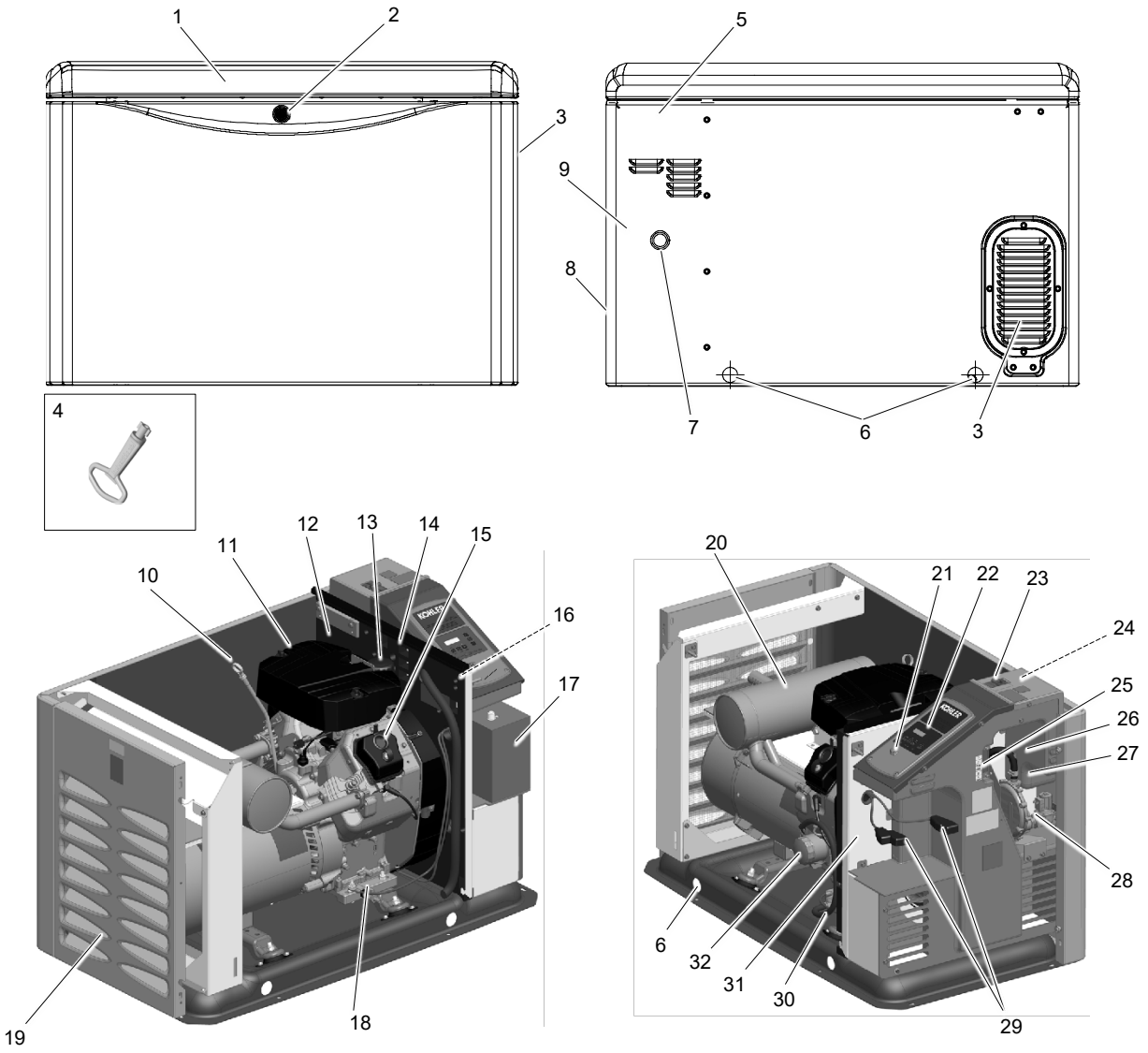

1. Hinged roof
2. Lock
3. Air intake
4. Enclosure key, provided with generator set
5. High voltage electrical in
6. Lifting holes
7. Fuel inlet
8. Air intake
9. Low voltage electrical in
10. Oil check (dipstick)
11. Air cleaner
12. Nameplate location (also see item 31)
13. Oil filter (20RCA(L) models)
14. Auxiliary winding circuit breaker
15. Oil fill
16. AC receptacle for accessories (not shown)
17. Engine starting battery location (battery purchased separately)
18. Oil drain valve
19. Exhaust outlet
20. Muffler
21. USB connector (for firmware updates)
22. RDC2 controller
23. Line circuit breaker
24. Field-connection terminal block, AC power (behind panel)
25. Low voltage connections (RBUS, 3 and 4)
26. Digital spark advance ignition (DSAI) lead location (14RCA(L) only)
27. Thermostat location
28. Fuel system
29. Battery cables (provided)
30. Oil drain hose (shown in storage position)
31. Nameplate location (alternate)
32. Oil filter (14RCA(L) models)

Figure 4 Service Views, 14/20RCA(L)

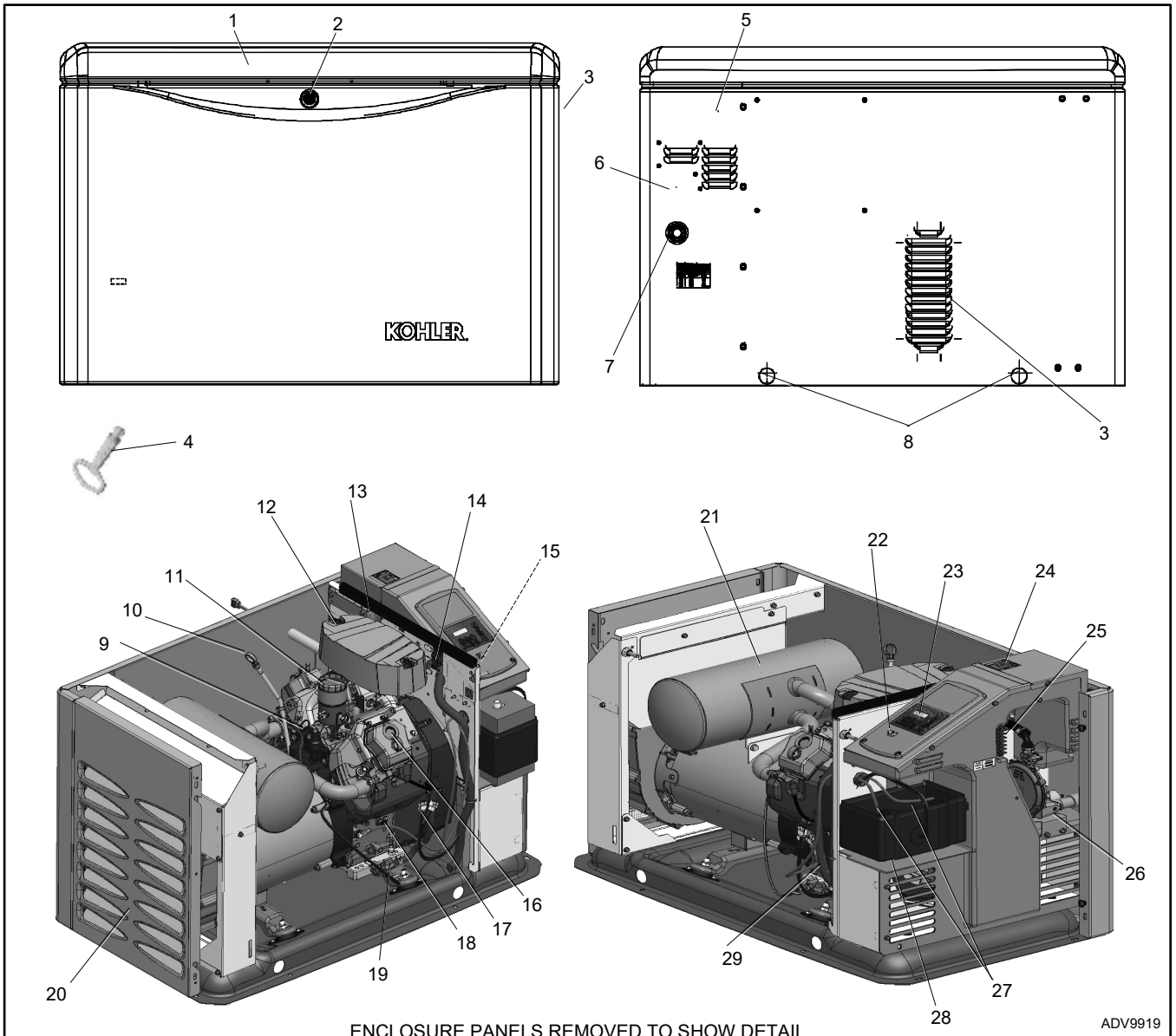

1. Hinged roof
2. Lock
3. Air inlet
4. Enclosure key, provided with generator set
5. High voltage electrical in
6. Low voltage electrical in
7. Fuel inlet
8. Lifting holes
9. Oil pressure switch
10. Oil check (dipstick)
11. Oil filter
12. Air cleaner
13. Auxiliary winding circuit breaker
14. Engine shutdown switch
15. AC receptacles for accessories (not shown)
16. Oil fill
17. Three-pin connectors for accessories
18. Oil level switch
19. Oil drain valve
20. Exhaust outlet
21. Silencer
22. USB connector (for firmware updates)
23. RDC2 controller
24. Load circuit breaker
25. Field-connection terminal block
26. Fuel system
27. Battery cables (provided)
28. Engine starting battery location (battery purchased separately)
29. Oil drain hose (shown in storage position)

Figure 5 Service Views (26RCA(L) model shown)

Notes

WARNING	
	**Accidental starting.** **Can cause severe injury or death.** Disconnect the battery cables before working on the generator set. Remove the negative (–) lead first when disconnecting the battery. Reconnect the negative (–) lead last when reconnecting the battery.

Disabling the generator set. Accidental starting can cause severe injury or death. Before working on the generator set or equipment connected to the set, disable the generator set as follows: (1) Press the generator set off/reset button to shut down the generator set. (2) Disconnect the power to the battery charger, if equipped. (3) Remove the battery cables, negative (–) lead first. Reconnect the negative (–) lead last when reconnecting the battery. Follow these precautions to prevent the starting of the generator set by the remote start/stop switch.

DANGER	
	**Hazardous voltage. Moving parts.** **Will cause severe injury or death.** Operate the generator set only when all guards and electrical enclosures are in place.

WARNING	
	**Hot engine and exhaust system.** **Can cause severe injury or death.** Do not work on the generator set until it cools.

Servicing the exhaust system. Hot parts can cause severe injury or death. Do not touch hot engine parts. The engine and exhaust system components become extremely hot during operation.

2.1 Scheduled Maintenance

Refer to the following service schedules and the runtime hours displayed on the controller to schedule routine maintenance. Intervals are shown in hours of operation and/or time intervals (i.e. weekly, monthly, quarterly, etc.) Have an authorized dealer service the generator set at the designated intervals in the service schedule for the life of the generator set. Service units subject to extreme weather, long operating hours, or dusty or dirty conditions more frequently.

Contact an authorized dealer for parts.

2.1.1 Service Schedule, 14RCA(L) Models

System Component or Procedure	See Section	Procedure					Frequency
		Visually Inspect	Check	Change	Clean	Test	
Fuel							
Flexible lines and connections		X		R			Quarterly
Main tank supply level			X				Weekly
Fuel piping		X					Yearly
Lubrication	Lubrication System						
Oil level		X	X				Every 8 hours of engine operation
Crankcase breather hose		X					Yearly or 500 hours
Change oil				X			Yearly or 100 hours
Replace filter				X			Yearly or 200 hours
Cooling	Cooling System						
Air ducts, louvers			X		X		Yearly
Exhaust Line	Exhaust System						
Leakage		X	X				Weekly
Insulation, fire hazards		X					Yearly
Obstructions or combustible materials near exhaust outlet		X					Weekly
DC Electrical System	Battery						
Check battery charger operation, charge rate		X					Monthly
Remove corrosion, clean and dry battery and rack		X			X		Yearly
Clean and tighten battery terminals and inspect boots		X	X				Yearly
Battery electrolyte level and specific gravity *			X				Yearly
AC Electrical System							
Tighten control and power wiring connections			X				Yearly
Remote control system, if equipped						X	Monthly
Visible wear or damage		X					Quarterly
Wire abrasions where subject to motion		X	X				Six Months
Wire-cable insulation condition		X					3 Years or 500 hours
Engine and Mounting							
Visible wear or damage		X					Weekly
Air cleaner service †	Air Cleaner Service		150	300			Yearly or hours shown
Spark plugs	Spark Plugs			300			
Replace stepper motor coupling and bushing	Stepper Motor Coupling			D			500 hours
Generator							
Visible wear or damage		X					Quarterly
Exercise generator set						X	Minimum of monthly
Brushes and collector ring		D			D		Yearly or 300 hours
Measure and record resistance readings of windings with insulation tester (Megger®, with SCR assembly or rectifier and load leads disconnected) *						D	3 Years
General Condition of Equipment							
Evidence of vibration, leakage, excessive noise, temperature, or deterioration		X	X		X		Weekly
Interior of sound enclosure		X			X		Quarterly

* Not necessary for maintenance-free batteries.
† Service more frequently under extremely dusty/dirty conditions.
Megger® is a registered trademark of Biddle Instruments.

X Action
D Authorized dealer only
R Replace as necessary

2.1.2 Service Schedule, 20/26RCA(L) Models

System Component or Procedure	Procedure					Frequency
	Visually Inspect	Check	Change	Clean	Test	
Fuel						
Flexible lines and connections	X		R			Quarterly
Main tank supply level		X				Weekly
Fuel piping	X					Yearly
Lubrication						
Oil level		X				Every 24 hours of Operation
Optional 300 hour extended life oil change kit (26RCA(L) models)		X				2 years or 300 hours
Oil change			X			Yearly or 150 hours
Replace filter			X			Yearly or 100 hours
Crankcase breather hose	X					Yearly or 500 hours
Oil cooler	X			X		Yearly or 100 hours
Cooling						
Air ducts, louvers		X		X		Yearly
Exhaust System						
Leakage	X	X				Weekly
Insulation, fire hazards	X					Yearly
Obstructions or combustible materials near exhaust outlet	X					Weekly
DC Electrical System						
Check battery charger operation, charge rate	X					Monthly
Remove corrosion, clean and dry battery and rack	X			X		Yearly
Clean and tighten battery terminals and inspect boots	X	X				Yearly
Battery electrolyte level and specific gravity *		X				Yearly
AC Electrical System						
Tighten control and power wiring connections		X				Yearly
Remote control system, if equipped					X	Monthly
Visible wear or damage	X					Quarterly
Wire abrasions where subject to motion	X	X				Six Months
Wire-cable insulation condition	X					3 Years or 500 hours
Engine and Mounting						
Visible wear or damage	X					Weekly
Air cleaner service †		150	300			Yearly or hours shown
Spark plugs		150	300			
Replace stepper motor coupling and bushing			D			500 hours
Generator						
Visible wear or damage	X					Quarterly
Exercise generator set					X	Minimum of monthly
Brushes and collector ring	D			D		Yearly or 300 hours
Measure and record resistance readings of windings with insulation tester (Megger®, with SCR assembly or rectifier and load leads disconnected)					D	3 Years
General Condition of Equipment						
Evidence of vibration, leakage, deterioration, unusual or excessive noise or temperature	X	X		X		Weekly
Interior of sound enclosure	X			X		Quarterly

* Not necessary for maintenance-free batteries.
† Service more frequently under extremely dusty/dirty conditions.
Megger® is a registered trademark of Biddle Instruments.

X Action
D. Authorized dealer only
R. Replace as necessary

2.2 Air Cleaner Service

WARNING	
	**Risk of fire.** **Can cause severe injury or death.** Do not smoke or permit flames or sparks near fuels or the fuel system.

Servicing the air cleaner. A sudden backfire can cause severe injury or death. Do not operate the generator set with the air cleaner removed.

2.2.1 Air Cleaner, 14RCA(L) Models

The engine has a replaceable high-density paper air cleaner element. See Figure 6.

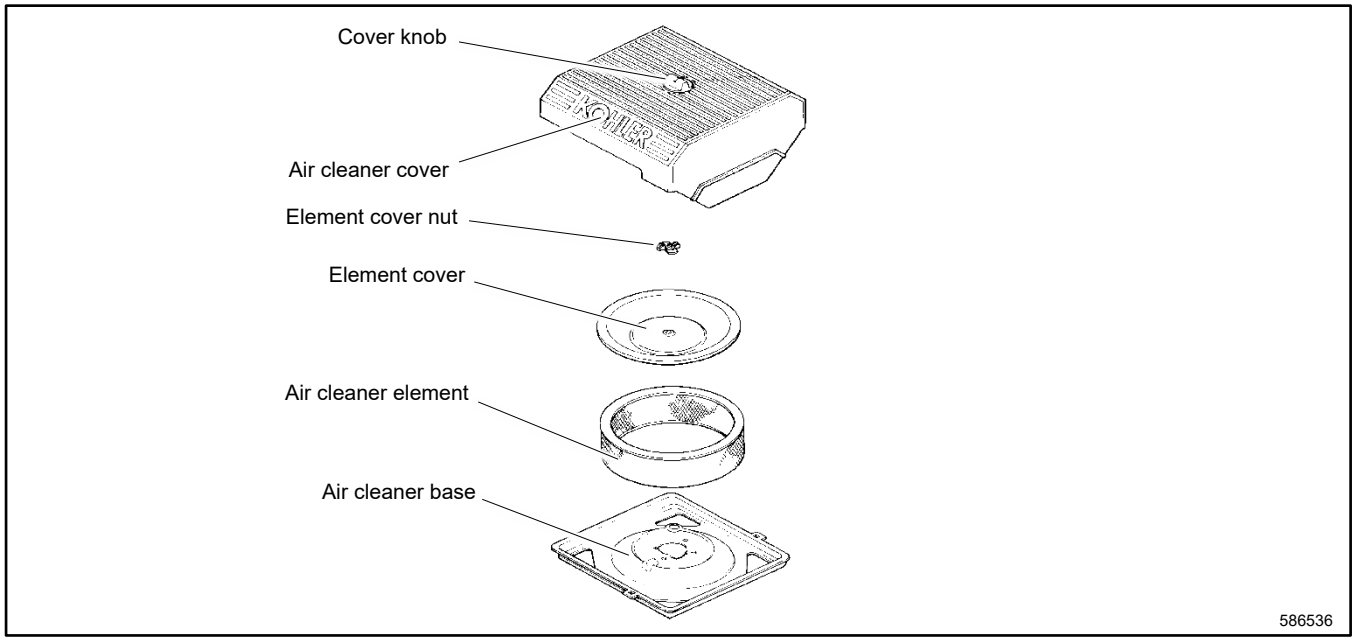

Figure 6 Air Cleaner Components

Check for a buildup of dirt and debris around the air cleaner system. Keep this area clean. Also check for loose or damaged components. Replace all bent or damaged air cleaner components.

Note:
Operating the engine with loose or damaged air cleaner components could allow unfiltered air into the engine causing premature wear and failure.

Air Cleaner Service

Use the following procedure to replace the paper element at the intervals specified in the service schedule. Replace the paper element more often under extremely dusty or dirty conditions.

1. Press the OFF button on the generator set controller.
2. Disconnect the utility power to the generator set.
3. Disconnect the generator set engine starting battery, negative (-) lead first.
4. Loosen the cover retaining knob and remove the cover.
5. Remove the element cover nut, element cover, and the paper element.

   Note:
   Do not wash the paper element or clean it with pressurized air, as this will damage the element.
6. Replace the element if it is dirty, bent, or damaged.
7. Check the air cleaner base. Make sure it is secure and not bent or damaged. Also check the element cover for damage and fit. Replace all damaged air cleaner components. Remove any loose dirt or debris from the air cleaner base. Wipe the base carefully so that no dirt drops into the intake throat. Check the condition of the rubber seal on the air cleaner stud and replace the seal if necessary.
8. Reinstall the paper element, element cover, element cover nut, and the air cleaner cover. Secure the cover with the cover retaining knob.
9. Reconnect the utility power to the generator set.
10. Reconnect the generator set engine starting battery, negative (-) lead last.

2.2.2 Air Cleaner, 20/26RCA(L) Models

The engine is equipped with a replaceable, high density paper air cleaner element. See Figure 7.

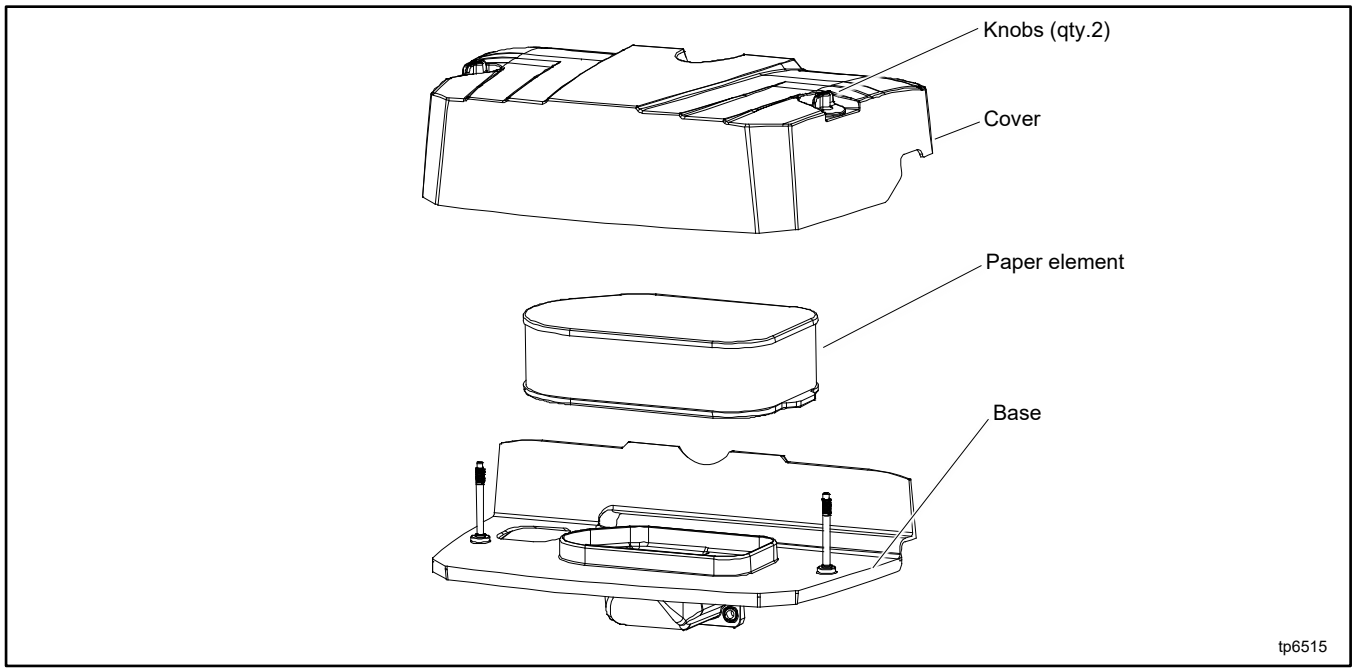

Figure 7 Air Cleaner Components

Check the air cleaner daily or before starting the engine. Check for a buildup of dirt and debris around the air cleaner system. Keep this area clean. Also check for loose or damaged components. Replace all bent or damaged air cleaner components.

Note:
Operating the engine with loose or damaged air cleaner components could allow unfiltered air into the engine causing premature wear and failure.

Air Cleaner Service

Replace the paper element at the intervals indicated in the service schedule. See the Service Schedule, 20/26RCA(L) Models section for the service schedule. See Figure 7 for the air cleaner components.

1. Press the OFF button on the generator set controller.
2. Disconnect the utility power to the generator set.
3. Disconnect the generator set engine starting battery, negative (-) lead first.
4. Loosen the two cover retaining knobs and remove the cover.
5. Remove the paper element.
6. Do not wash the paper element or use pressurized air, as this will damage the element. Replace a dirty, bent, or damaged element. Handle new elements carefully; do not use if the sealing surfaces are bent or damaged.
7. When servicing the air cleaner, check the air cleaner base. Make sure it is secured and not bent or damaged. Also, check the element cover for damage or improper fit. Replace all damaged air cleaner components.

   Note:
   If any loose dirt or debris fell on the air cleaner base when the element was removed, carefully remove it and wipe the base clean. Be careful that none of it drops into the intake throat.
8. Reinstall the paper element onto the air cleaner base. Make sure the element is flat and properly seated.
9. Install the air cleaner cover and secure with the two retaining knobs.
10. When element replacement is necessary, order genuine Kohler parts.
11. The generator set will not start if the air filter is removed.

2.3 Battery

⚠ WARNING	**Sulfuric acid in batteries.** **Can cause severe injury or death.** Wear protective goggles and clothing. Battery acid may cause blindness and burn skin.
	

Battery electrolyte is a diluted sulfuric acid. Battery acid can cause severe injury or death. Battery acid can cause blindness and burn skin. Always wear splashproof safety goggles, rubber gloves, and boots when servicing the battery. Do not open a sealed battery or mutilate the battery case. If battery acid splashes in the eyes or on the skin, immediately flush the affected area for 15 minutes with large quantities of clean water. Seek immediate medical aid in the case of eye contact. Never add acid to a battery after placing the battery in service, as this may result in hazardous spattering of battery acid.

Battery acid cleanup. Battery acid can cause severe injury or death. Battery acid is electrically conductive and corrosive. Add 500 g (1 lb.) of bicarbonate of soda (baking soda) to a container with 4 L (1 gal.) of water and mix the neutralizing solution. Pour the neutralizing solution on the spilled battery acid and continue to add the neutralizing solution to the spilled battery acid until all evidence of a chemical reaction (foaming) has ceased. Flush the resulting liquid with water and dry the area.

Battery gases. Explosion can cause severe injury or death. Battery gases can cause an explosion. Do not smoke or permit flames or sparks to occur near a battery at any time, particularly when it is charging. Do not dispose of a battery in a fire. To prevent burns and sparks that could cause an explosion, avoid touching the battery terminals with tools or other metal objects. Remove all jewelry before servicing the equipment. Discharge static electricity from your body before touching batteries by first touching a grounded metal surface away from the battery. To avoid sparks, do not disturb the battery charger connections while the battery is charging. Always turn the battery charger off before disconnecting the battery connections. Ventilate the compartments containing batteries to prevent accumulation of explosive gases.

Battery short circuits. Explosion can cause severe injury or death. Short circuits can cause bodily injury and/or equipment damage. Disconnect the battery before generator set installation or maintenance. Remove all jewelry before servicing the equipment. Use tools with insulated handles. Remove the negative (–) lead first when disconnecting the battery. Reconnect the negative (–) lead last when reconnecting the battery. Never connect the negative (–) battery cable to the positive (+) connection terminal of the starter solenoid. Do not test the battery condition by shorting the terminals together.

Refer to this section for general battery information and maintenance. Also consult the battery manufacturer's instructions for battery maintenance.

All generator set models use a negative ground with a 12-volt engine electrical system. Consult the generator set nameplate for the engine electrical system voltage. See Figure 8 for battery size and capacity recommendations for replacement purposes. See Figure 9 for typical battery connections. Follow the polarity (+ and -) markings.

Model	BCI Group Size	Cold Cranking Amps at -18°C (0°F), Minimum
14RCA(L)	51	500
20RCA(L)	51	500
26RCA(L)	51	500

Figure 8 Battery Size

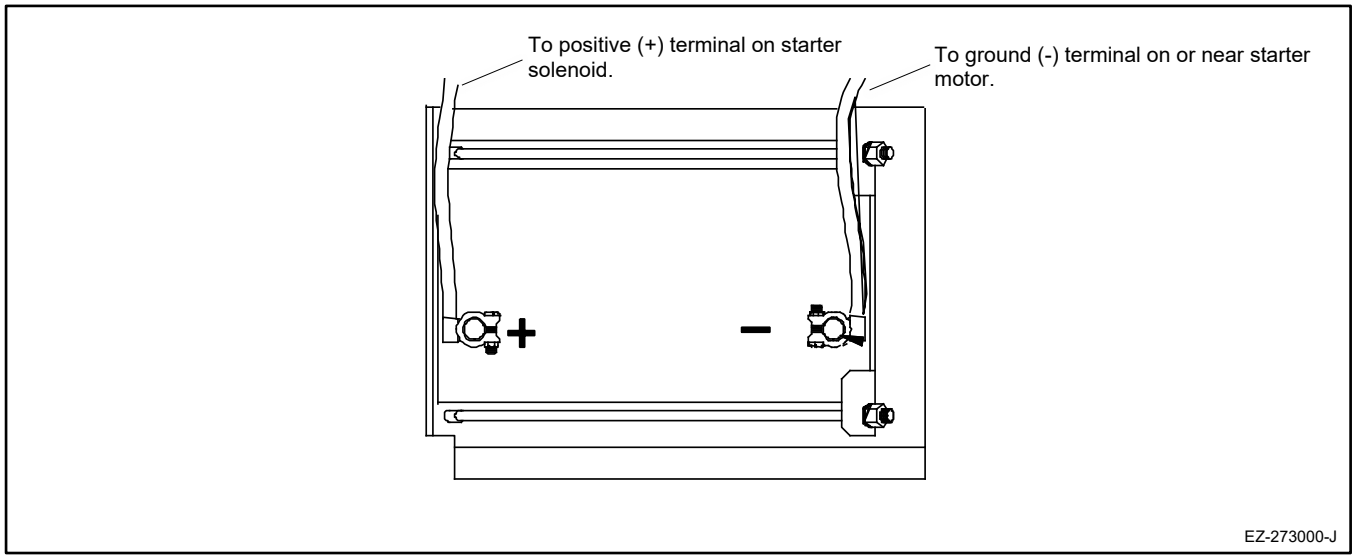

Figure 9 12-Volt Engine Electrical System Single Starter Motor, Typical Battery Connection

2.3.1 Cleaning the Battery

Clean the battery and cables and tighten battery terminals using the service schedule recommendations. To prevent corrosion, maintain tight, dry electrical connections at the battery terminals. To remove corrosion from battery terminals, disconnect the cables from the battery and scrub the terminals with a wire brush. Clean the battery and cables with a solution of baking soda and water. After cleaning, flush the battery and cables with clean water and wipe them with a dry, lint-free cloth.

After reconnecting the battery cables, coat the battery terminals with petroleum jelly, silicone grease, or other nonconductive grease.

2.3.2 Testing the Battery

To test the battery, follow battery manufacturer's instructions.

2.4 Cooling System

The engine fan draws cooling air through the openings in the sides and end near the battery. The alternator fan draws cooling air through openings on the side walls of the enclosure. The cooling air mixes with the engine exhaust and is discharged at the exhaust outlet. See Figure 10 and the service view in the Service Views section for air intake and exhaust locations. To prevent generator set damage caused by overheating, keep the housing cooling inlets and outlets clean and unobstructed at all times.

Note:
Do not block the generator set cooling air inlets or mount other equipment above them. Overheating and severe generator damage may occur.

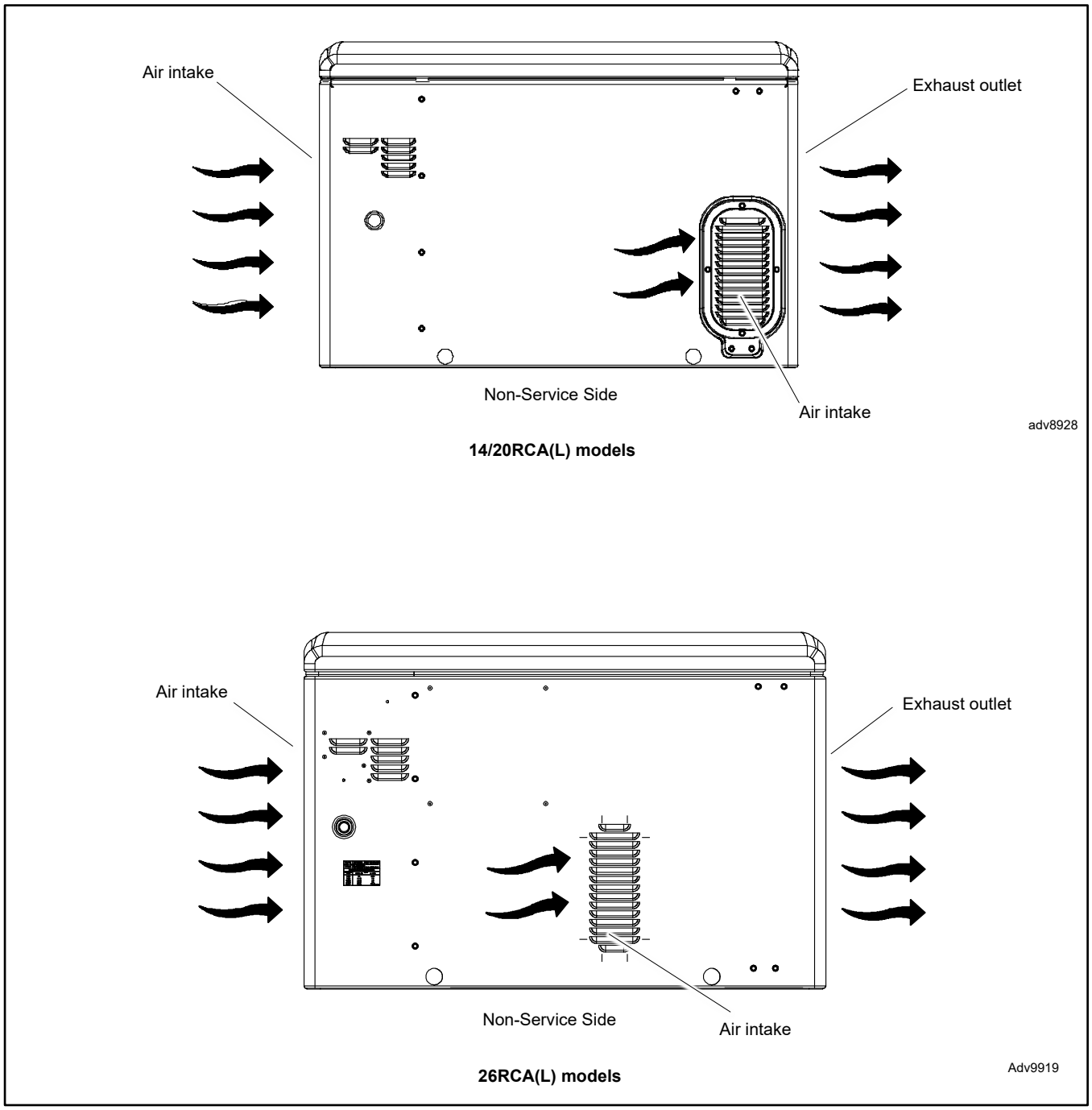

Figure 10 Cooling Air Intake and Exhaust

2.5 Exhaust System

⚠ WARNING	
	**Carbon monoxide.** **Can cause severe nausea, fainting, or death.** The exhaust system must be leakproof and routinely inspected.

Remove all combustible materials from the exhaust location. Combustible materials include building materials as well as natural surroundings. Keep dry field grass, foliage, and combustible landscaping material a minimum of 1.2 m (4 ft.) from the exhaust outlet.

Periodically inspect the exhaust system components for cracks, leaks, and corrosion.

- Check for corroded or broken metal parts and replace them as needed.
- Check that the exhaust outlet is clear.
- Check that all covers, doors, and panels are undamaged, in place, and locked.

2.6 Fuel System Maintenance

⚠ WARNING	
	**Explosive fuel vapors.** **Can cause severe injury or death.** Use extreme care when handling, storing, and using fuels.

The fuel system. Explosive fuel vapors can cause severe injury or death. Vaporized fuels are highly explosive. Use extreme care when handling and storing fuels. Store fuels in a well-ventilated area away from spark-producing equipment and out of the reach of children. Never add fuel to the tank while the engine is running because spilled fuel may ignite on contact with hot parts or from sparks. Do not smoke or permit flames or sparks to occur near sources of spilled fuel or fuel vapors. Keep the fuel lines and connections tight and in good condition. Do not replace flexible fuel lines with rigid lines. Use flexible sections to avoid fuel line breakage caused by vibration. Do not operate the generator set in the presence of fuel leaks, fuel accumulation, or sparks. Repair fuel systems before resuming generator set operation.

Gas fuel leaks. Explosive fuel vapors can cause severe injury or death. Fuel leakage can cause an explosion. Check the LPG vapor or natural gas fuel system for leakage by using a soap and water solution with the fuel system test pressurized to 6–8 ounces per square inch (10–14 inches water column). Do not use a soap solution containing either ammonia or chlorine because both prevent bubble formation. A successful test depends on the ability of the solution to bubble.

Routine service items include draining water/sediment from piping at petcock or pipe end cap, checking for fuel leakage at pipe connections, checking flexible sections for cracking or chafing, and keeping components clean including fuel regulator vent holes.

A grease or wax residue tends to accumulate in the piping and fuel regulators over time. If fuel system problems persist, disassemble the fuel system components and check for residue buildup. Remove any residue with a brush and mild detergent.

2.7 Lubrication System

See the service schedules in the Scheduled Maintenance section for oil change and oil filter replacement intervals. See the service views in the Service Views section for the oil drain, oil check, oil fill, and oil filter locations.

⚠ WARNING	**Accidental starting.** **Can cause severe injury or death.** Disconnect the battery cables before working on the generator set. Remove the negative (–) lead first when disconnecting the battery. Reconnect the negative (–) lead last when reconnecting the battery.
	

Disabling the generator set. Accidental starting can cause severe injury or death. Before working on the generator set or equipment connected to the set, disable the generator set as follows: (1) Press the generator set off/reset button to shut down the generator set. (2) Disconnect the power to the battery charger, if equipped. (3) Remove the battery cables, negative (–) lead first. Reconnect the negative (–) lead last when reconnecting the battery. Follow these precautions to prevent the starting of the generator set by the remote start/stop switch.

⚠ WARNING	**Hot engine and exhaust system.** **Can cause severe injury or death.** Do not work on the generator set until it cools.
	

2.7.1 Low Oil Pressure Shutdown

The low oil pressure (LOP) shutdown feature protects the engine against internal damage if the oil pressure drops below a minimum pressure because of oil pump failure or other malfunction.

Note:
The LOP shutdown feature does not protect against damage caused by operating when the oil level is low; it is not a low oil level shutdown. Check the oil level regularly, and add oil as needed.

2.7.2 Low Oil Level Shutdown (26RCA(L) Models)

The low oil level (LOL) shutdown feature protects the engine against internal damage if the oil level drops below a minimum level. The system utilizes a float switch installed in the oil pan. When the oil level reaches a threshold, the float grounds and sends the controller a fault signal while also shutting down the engine.

Note:
Check the oil level regularly, and add oil as needed.

2.7.3 Oil Check

The generator set is shipped with oil. Before operating the generator set, check the engine oil in the crankcase.

To check the oil level, shut down the generator set and wait several minutes. Remove the dipstick and wipe the end clean, reinsert, and remove. See Figure 11. Maintain the oil level between the Add and Full marks on the dipstick. Add 5W-30 or 10W-30 synthetic oil when the oil level is low.

Check the oil level before each use. For extended operation, check the oil level every 8 hours.

For 26RCA(L) models, check the oil level every 24 hours. Do not check the oil level when the generator set is running. Shut down the generator set and wait several minutes before checking the oil.

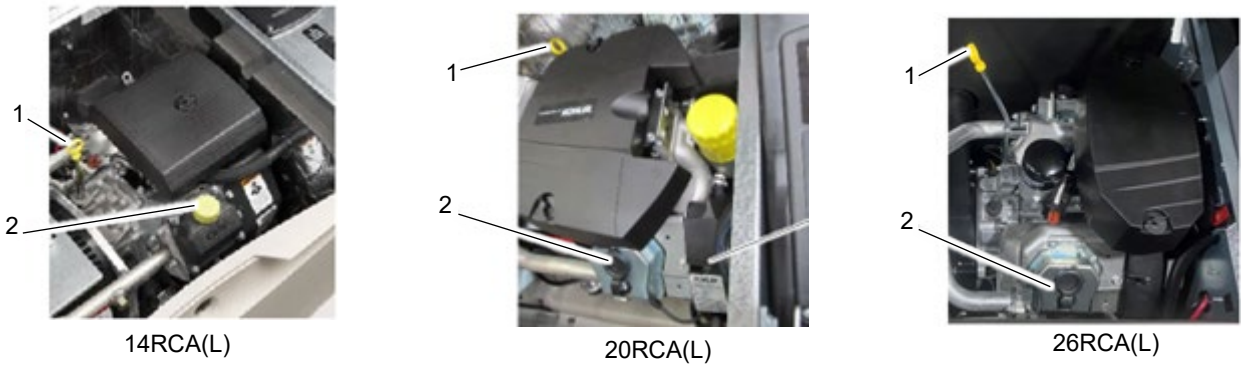

14RCA(L) 20RCA(L) 26RCA(L)

1. Dipstick
2. Oil Fill

Figure 11 Dipstick and Oil Fill Locations

2.7.4 Engine Oil Recommendation

Use service class SJ or higher. Synthetic oil oxidizes and thickens less than other oils and leaves the engine intake valves and pistons cleaner. Refer to Oil Matrix chart for oil recommendation based on air temperature at time of operation.

All season Kohler PRO 10W-50 Oil is the ideal oil for KOHLER engines. It is specifically formulated to extend the oil and filter change to 300 Hours (2 years) when paired with a KOHLER PRO extended life oil filter. The Kohler PRO kit comes with both oil and filter and can be purchased from your dealer.

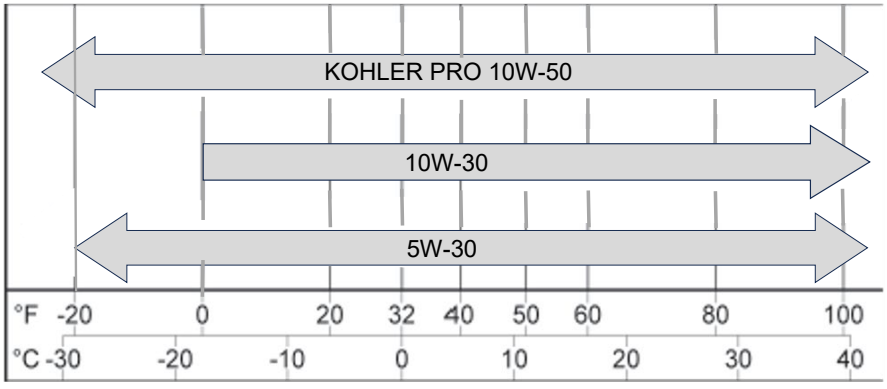

2.7.5 Oil Change Procedure

Note:
Dispose of all waste materials (engine oil, fuel, filter, etc.) in an environmentally safe manner.

Drain the oil while it is still warm.

1. **Drain the oil.**
   a. Press the OFF button on the generator set controller.
   b. Disconnect the utility power to the generator set.
   c. Disconnect the generator set engine starting battery, negative (-) lead first.
   d. Remove the end panels from the enclosure by lifting the panels up and out. Then lift off the service-side panel to access the oil drain valve and hose.
   e. Clean the area around the dipstick and oil fill cap.
   f. Remove the oil drain hose from its retaining clip. Remove the cap from the oil drain hose and lower the hose into an oil collection container.
   g. Open the oil drain valve on the engine.
   h. Remove the dipstick and oil fill cap. Allow time for the engine oil to drain completely.
   i. Close the oil drain valve. Replace the cap on the oil drain hose. Replace the oil drain hose in its retaining clip.
   j. Replace the dipstick.
2. **Replace the oil filter.**
   a. Clean the area around the oil filter.
   b. Loosen the oil filter by rotating it counterclockwise with an oil filter wrench. On 20/26RCA(L) models, allow the filter to rest on the oil filter housing cup to drain. Then remove the oil filter.
   c. Clean the gasket sealing surface of the oil filter adapter.
   d. Apply a light coat of clean oil to the rubber seal of the new oil filter.
   e. Install the new oil filter following the instructions provided with the filter. Tighten the filter 3/4 to 1 turn after gasket contact.
3. **Fill with oil.**

Note:
When the oil is drained, some oil remains in the engine. The amount of oil needed to refill the engine may be less than the capacity shown in Figure 12. Use the dipstick shown in the Oil Check (typical) figure to check the oil level during the fill. Do not fill past the full mark on the dipstick.

Note:
See the Engine Oil Recommendation section for the recommended oil type.

Generator Set Model	Oil Capacity, L (qt.)
14RCA(L)	1.8 (1.9)
20/26RCA(L)	1.9 (2.0)

Figure 12 Engine Oil Capacity

   a. Add oil through the oil fill port; see Figure 13.
   b. Use the dipstick to check the oil level before starting to add the final quart of oil. Fill the engine to the F mark on the dipstick.
   c. Reinstall the dipstick and the oil fill cap.



Note:
20RCA(L) model shown; 14/26RCA(L) models are similar.

img1062

Figure 13 Oil Fill Components

d. Reconnect the generator set engine starting battery, negative (-) lead last.

e. Reconnect the utility power to the generator set.

f. Press the RUN button on the generator set controller. The generator set will start.

g. Run the generator set for a minute to allow the oil pressure to reach operating range.

h. Stop the generator set, wait 1 minute, and then recheck the oil level. Add oil to bring the level up to the F mark on the dipstick.

4. **Check for leaks.**

   a. Check for oil leaks.

   b. Fix leaks and recheck the oil level.

   c. Reinstall the housing side panel.

5. **Reset the maintenance timer on the controller.**

2.7.6 Resetting the Maintenance Timer

1. From the Overview menu, step down to the Genset Run Time menu.
2. Press the Select button and then step down to the Next Maintenance screen.
3. Press the Select button.
4. Press the Up arrow button so that “Reset Maint Timer? Yes” is displayed.
5. Press the Select button. **After about two minutes,** the new maintenance interval and date are displayed.

2.7.7 Oil Cooler

Inspect and clean the oil cooler at the intervals indicated in the service schedule. The oil cooler must be kept free of debris.

Oil Cooler, 14RCA(L)

Remove the front enclosure panel to access the oil cooler. See the Disassembly section for instructions to remove the front panel.

See Figure 14 for the oil cooler location. Clean the outside of the oil cooler with a brush or compressed air. If it is necessary to clean the back of the oil cooler, remove the two screws holding the oil cooler unit to the blower housing. Tilt the cooler and clean with a brush or compressed air as shown in Figure 15. After cleaning, reinstall the oil cooler and secure with the mounting screws.

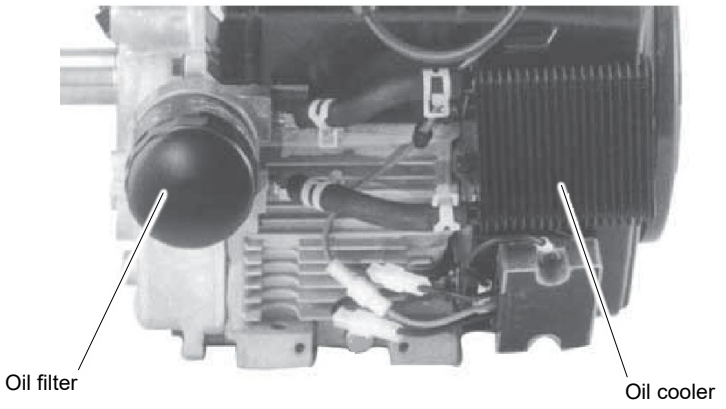

Figure 14 Oil Cooler Location, 14RCA(L)



Figure 15 Cleaning the Oil Cooler

Oil Cooler, 20/26RCA(L)

See the Oil Fill Components figure and Figure 16 for the oil cooler location. The oil cooler is located on the service side of the engine, under the No. 2 cylinder shroud. Remove the top mounting screw and loosen the two side screws, then lift off the cylinder shroud.

Clean the outside of the oil cooler fins with a brush or with compressed air.

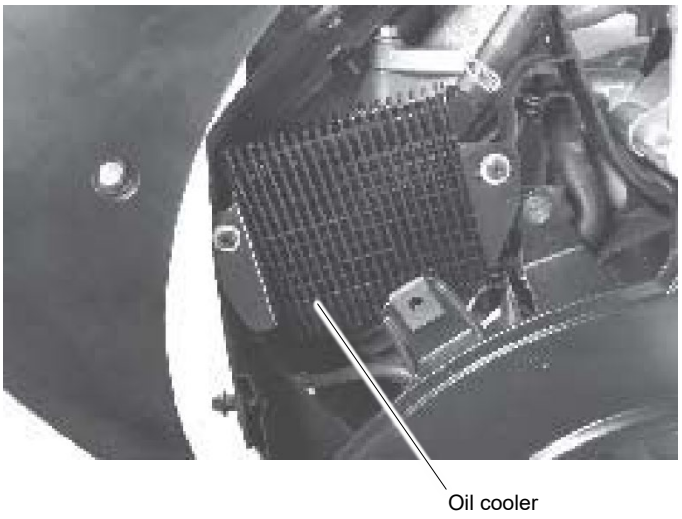

Figure 16 Oil Cooler, 20/26RCA(L)

2.8 Spark Plugs

WARNING	
	**Accidental starting.** **Can cause severe injury or death.** Disconnect the battery cables before working on the generator set. Remove the negative (–) lead first when disconnecting the battery. Reconnect the negative (–) lead last when reconnecting the battery.

Disabling the generator set. Accidental starting can cause severe injury or death. Before working on the generator set or equipment connected to the set, disable the generator set as follows: (1) Press the generator set off/reset button to shut down the generator set. (2) Disconnect the power to the battery charger, if equipped. (3) Remove the battery cables, negative (–) lead first. Reconnect the negative (–) lead last when reconnecting the battery. Follow these precautions to prevent the starting of the generator set by the remote start/stop switch.

WARNING	
	**Hot engine and exhaust system.** **Can cause severe injury or death.** Do not work on the generator set until it cools.

Reset the spark plug gap or replace the plugs with new plugs as necessary.

1. Clean the area around the base of the spark plug to keep dirt and debris out of the engine.
2. Remove the spark plug and check its condition. Replace the spark plug if it is worn or if its reuse is questionable.
3. Check the spark plug gap using a wire feeler gauge. See Figure 17 for the recommended spark plug gap. Adjust the gap by carefully bending the ground electrode. See Figure 18 and Figure 19.
4. Reinstall the spark plug into the cylinder head. Torque the spark plug to the values in Figure 17.

Generator Set Model	Spark Plug Gap	Tightening Torque
14/20/26RCA(L) models	0.76 mm (0.030 in.)	24.4-29.8 Nm (18-22 ft.lb.)

Figure 17 Spark Plug Gap and Tightening Torque

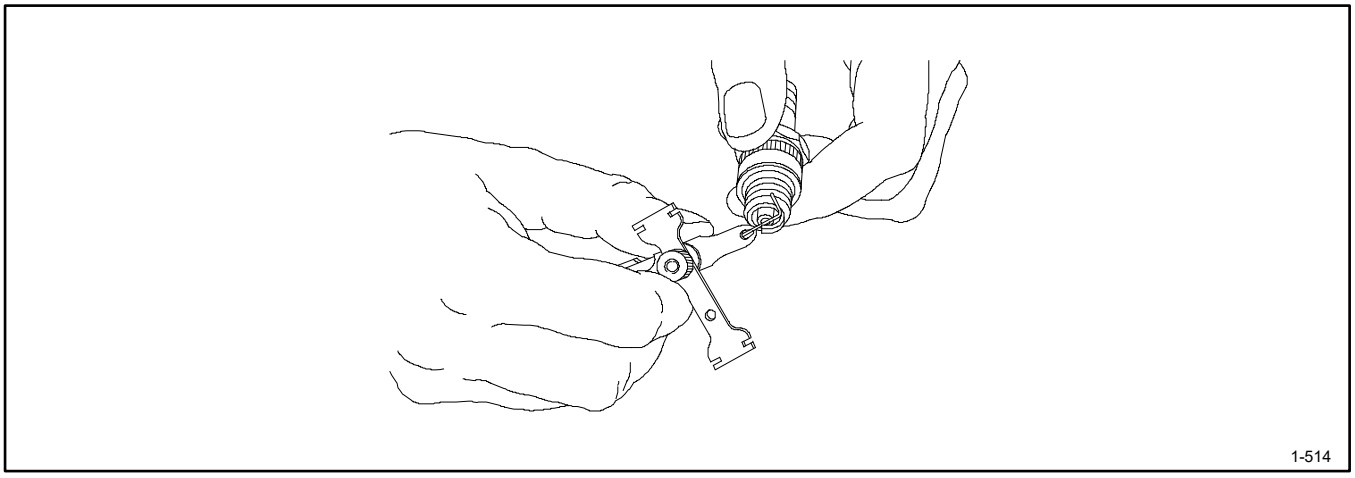

Figure 18 Checking the Spark Plug Gap

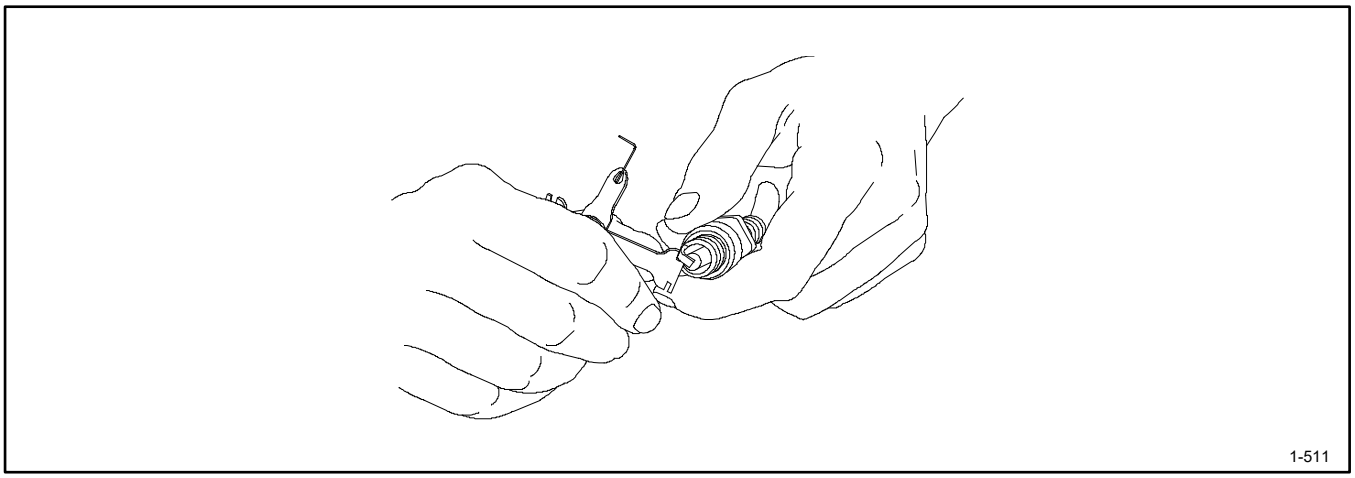

Figure 19 Adjusting the Spark Plug Gap

2.9 Stepper Motor Coupling

Replace the stepper motor coupling and bushings at the intervals shown in the service schedule. See the Parts Catalog for replacement part numbers.

Figure 20 shows the location of the coupling assembly under the air cleaner. Loosen the set screw to remove the coupling from the motor shaft. Apply Loctite® to the set screw threads when installing the stepper motor coupling.

Note:
A loose stepper motor coupling can cause the engine to hunt.

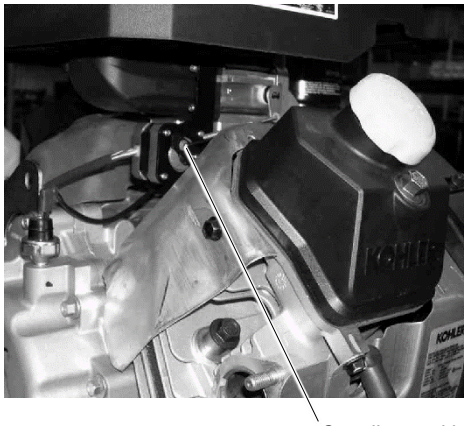

Figure 20 Stepper Motor Coupling 14/20RCA(L)

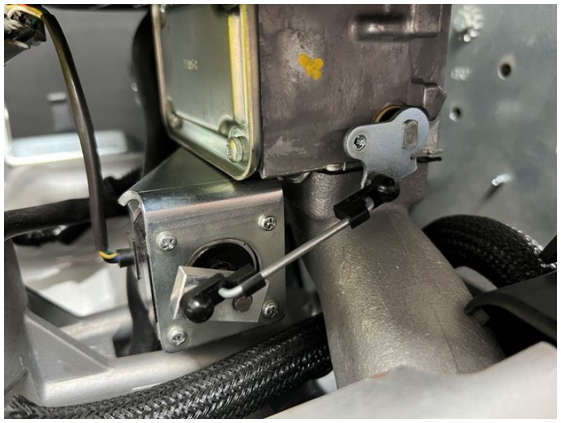

26RCA-0



26RCA-A

Figure 21 Stepper Motor Coupling 26RCA(L)

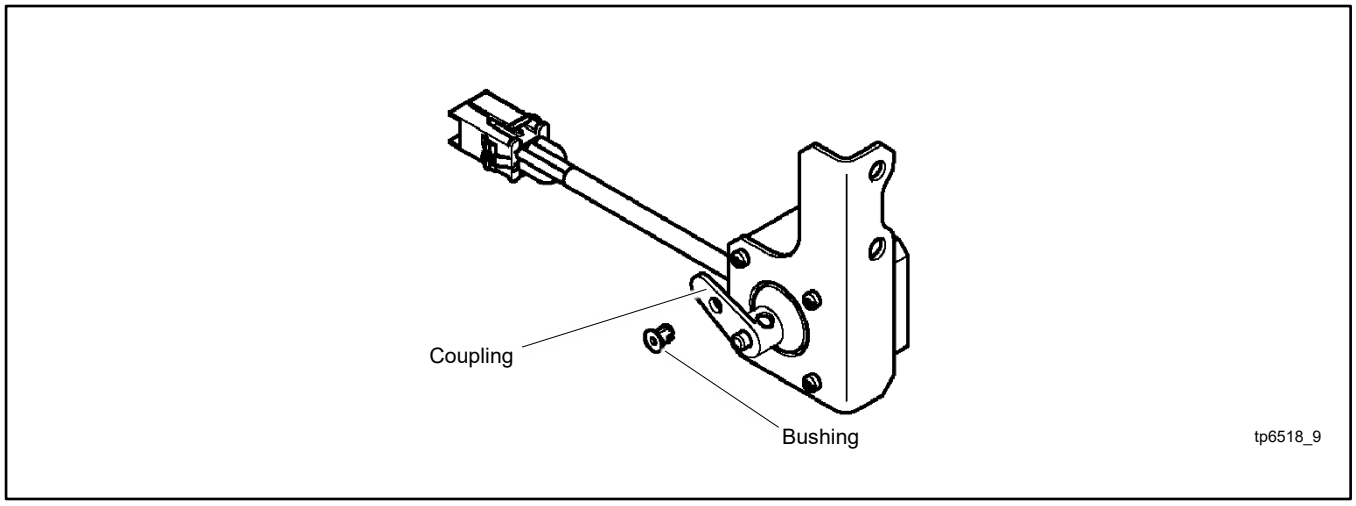

Figure 22 Stepper Motor Coupling and Bushing

2.10 Storage Procedure

Perform the following storage procedure before removing the generator set from service for three months or longer. Consult the engine service manual for additional storage recommendations.

Note:
Run the generator set monthly whenever possible.

2.10.1 Lubricating System

1. Operate the generator set until it reaches operating temperature, or about 15 minutes.
2. Stop the generator set.
3. While the engine is still warm, drain the engine lubrication oil from the engine crankcase.
4. Refill engine crankcase with oil. See the Engine Oil Recommendation section for oil recommendations.
5. Run the generator set for a few minutes to distribute the clean oil.
6. Stop the generator set.

2.10.2 Fuel System

1. Start the generator set.
2. With the generator set running, shut off the gas supply.
3. Run the generator set until the engine stops.
4. Press the OFF button on the generator set controller.

2.10.3 Cylinder Lubrication

1. Remove the spark plugs.
2. Pour one tablespoon of engine oil into each spark plug hole. Install the spark plugs and ground the spark plug leads. *Do not connect the leads to the plugs.*
3. Crank the engine two or three revolutions to lubricate the cylinders.

2.10.4 Exterior Preparation

1. Clean the exterior surface of the generator set.
2. Seal all openings in the engine with nonabsorbent adhesive tape.
3. Mask all areas to be used for electrical contact.
4. Spread a light film of oil over unpainted metallic surfaces to prevent rust and corrosion.

2.10.5 Battery

Perform battery storage last.

1. Press the OFF button on the generator set controller.
2. Disconnect the battery, negative (-) lead first.
3. Clean the battery.
4. Place the battery in a warm, dry location.
5. Connect the battery to a float/equalize battery charger, or charge the battery monthly using a trickle charger. Follow the battery charger manufacturer’s recommendations.

Notes

3.1 Voltage Reconnection

The reconnection procedure explains reconnections to change the voltage configuration only. Do not attempt to change the frequency (e.g. from 60 Hz to 50 Hz) in the field.

The following instructions explain the reconnection of 12-lead generators; 4-lead generators are not reconnectable. In all cases, follow the National Electrical Code (NEC) guidelines.

Reconnect the stator leads of the generator set if a different output phase or voltage is desired. Refer to the following procedure and the connection schematics. Follow all safety precautions at the front of this manual and in the text while performing this procedure.

Replace the circuit breaker when changing the voltage configuration. Refer to the generator set parts catalog to find the circuit breaker part number for the new voltage rating.

Note:
Order voltage reconnection decal 246242 and affix decal to generator set after reconnecting to a voltage different than the nameplate.

NOTICE

This generator set has been rewired from its nameplate voltage to:

246242

WARNING



Accidental starting.
Can cause severe injury or death.
Disconnect the battery cables before working on the generator set. Remove the negative (–) lead first when disconnecting the battery. Reconnect the negative (–) lead last when reconnecting the battery.

Disabling the generator set. Accidental starting can cause severe injury or death. Before working on the generator set or equipment connected to the set, disable the generator set as follows: (1) Move the generator set master switch to the OFF position. (2) Disconnect the power to the battery charger. (3) Remove the battery cables, negative (–) lead first. Reconnect the negative (–) lead last when reconnecting the battery. Follow these precautions to prevent starting of the generator set by an automatic transfer switch, remote start/stop switch, or engine start command from a remote computer.

DANGER



Hazardous voltage. Moving parts.
Will cause severe injury or death.
Operate the generator set only when all guards and electrical enclosures are in place.

Grounding electrical equipment. Hazardous voltage will cause severe injury or death. Electrocution is possible whenever electricity is present. Ensure you comply with all applicable codes and standards. Electrically ground the generator set, transfer switch, and related equipment and electrical circuits. Turn off the main circuit breakers of all power sources before servicing the equipment. Never contact electrical leads or appliances when standing in water or on wet ground because these conditions increase the risk of electrocution.

Short circuits. Hazardous voltage/current will cause severe injury or death. Short circuits can cause bodily injury and/or equipment damage. Do not contact electrical connections with tools or jewelry while making adjustments or repairs. Remove all jewelry before servicing the equipment.

3.2 12-Lead (Three-Phase) Generator Sets

Three-phase, 12-lead generator sets are reconnectable to the voltages shown on the generator set specification sheet.

See Figure 24 for alternator connections. In addition to changing the alternator lead connections and routing through the current transformers (CTs), you must change the system voltage by changing the voltage setting on the controller. Use SiteTech™ software or the controller menus to change the voltage setting. See the Controller Setup section for instructions.

Note:
Equipment damage. Verify that the voltage ratings of the transfer switch, line circuit breakers, and other accessories match the selected line voltage.

Replace the line circuit breaker on the generator set. Refer to the generator set parts catalog to find the circuit breaker part number for the new voltage rating.

If alternator reconnection is required, use the following procedure.

Reconnection Procedure

1. Press the OFF button on the RDC2 controller.
2. Disconnect engine starting battery, negative (-) lead first.
3. Disconnect utility power to the generator set.
4. To gain access to the alternator leads and CTs, remove the circuit breaker cover and the controller panel. Be careful of the controller connections when removing the controller. See Figure 23.
5. Replace the circuit breaker with the correct part for the new voltage rating. Refer to the generator set parts catalog for circuit breaker part numbers.
6. Select desired voltage connection. See Figure 24. Connect the leads according to the diagram for desired phase and voltage.
7. Reconnect generator set engine starting battery, negative (-) lead last.
8. Follow the instructions in the Controller Setup section to check the system voltage, frequency, and phase settings, and change them if necessary.
9. Connect a digital multimeter (DVM) to the generator set output.
10. Press RUN to start the generator set.
11. Use a voltmeter to check for the correct voltage output from the generator set. Follow the instructions in the Voltage Calibration section to calibrate the voltage on the RDC2 controller, if necessary.
12. Press OFF to stop the generator set.
13. Reconnect utility power to the generator set.
14. Press AUTO to place the generator set in automatic mode.

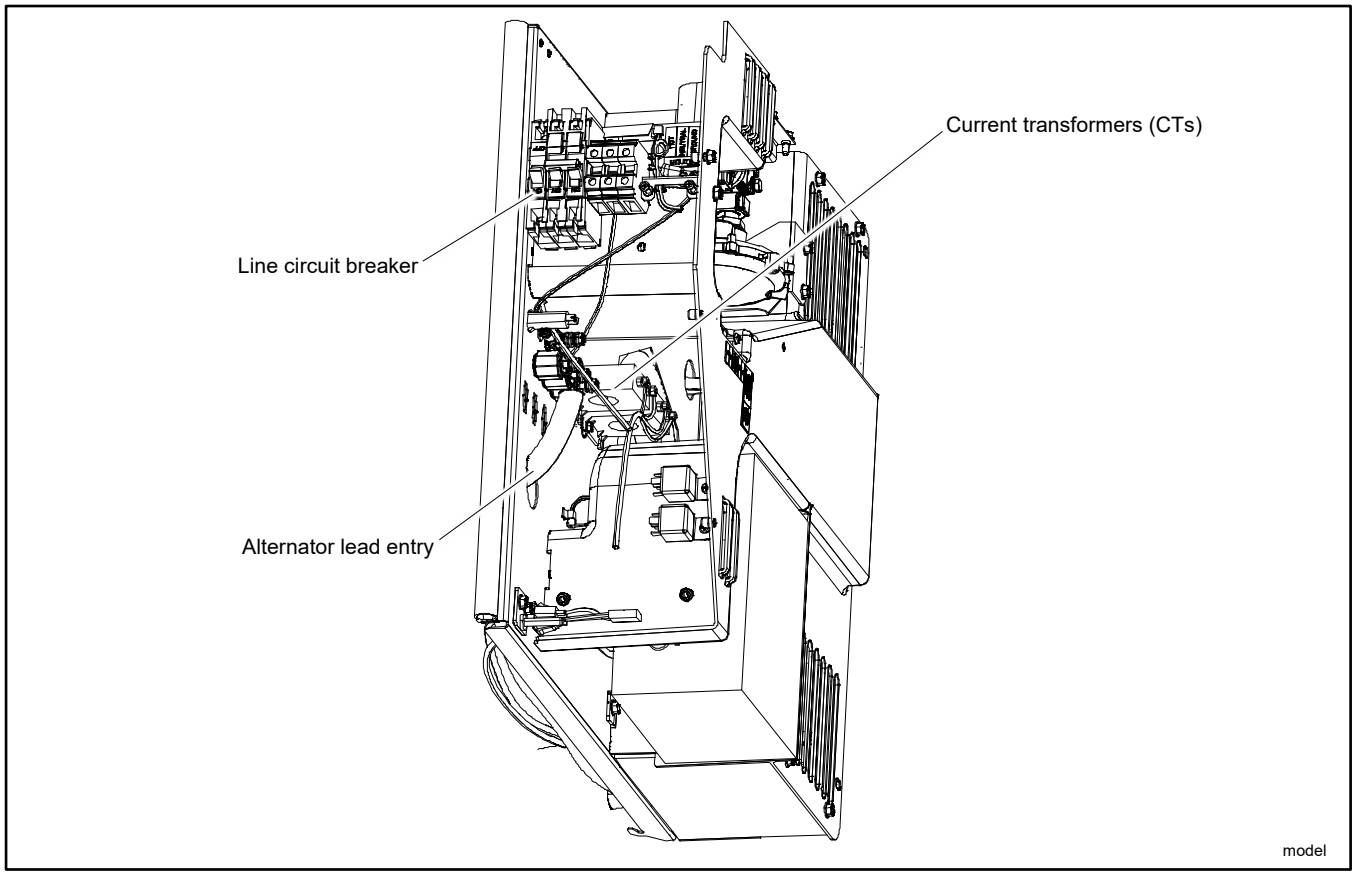

Figure 23 Component Locations (cover panels removed for access)

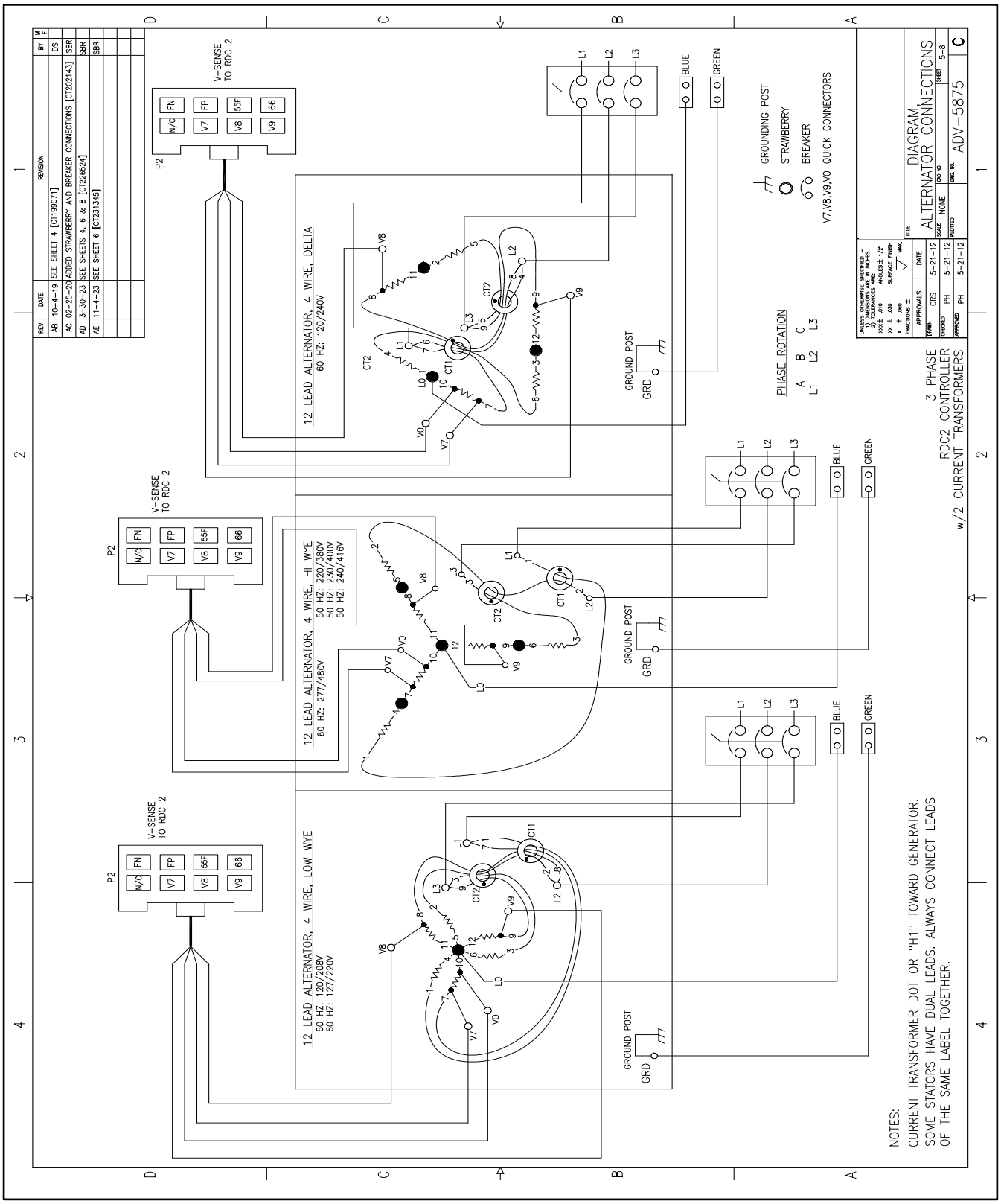

Figure 24 12-Lead Generator Reconnection

4.1 Introduction

Model RCA generator sets use the RDC2.X controller shown in Figure 25. Note that the distinction between the RDC2 and the RDC2.X is important when downloading new controller firmware. RDC2 and RDC2.X firmware are not interchangeable.

The RDC2.X controller can be identified as follows:

- The circuit board, visible on the back of the controller, is blue.
- On controllers manufactured between October, 2016, and February, 2020, the USB port cover is gray.
- On controllers manufactured in February, 2020, or later, the USB cover is black.

The controller manages the operation of the generator set, a Model RXT transfer switch (if equipped), the optional Programmable Interface Module (PIM), and optional load management device. See the generator set Operation Manual for controller operation instructions.

This section covers adjustment and replacement of the RDC2.X controller. See the Controller Troubleshooting section for troubleshooting information.

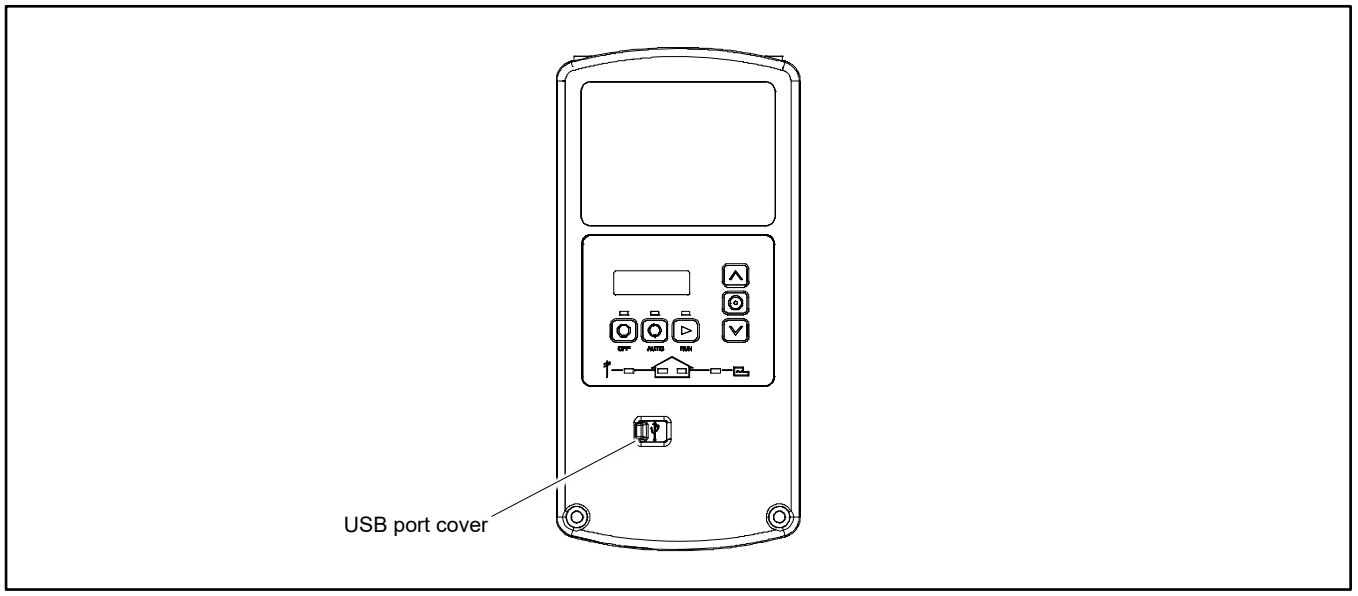

Figure 25 RDC2.X Controller

4.2 SiteTech Software

Many procedures in this manual require the use of a personal computer (or laptop) with SiteTech™ software to change controller settings or update firmware. SiteTech software is available to authorized dealers. See the SiteTech Operation Manual, TP-6701, for general software operation instructions.

Use a USB cable to connect the personal computer directly to the device. See Figure 27. The USB cable must have a male USB A connector on one end and a male mini-B connector on the other and must be less than 5 m (16.4 ft.) long. See Figure 26.



Detail, mini-B connector

Figure 26 USB Cable

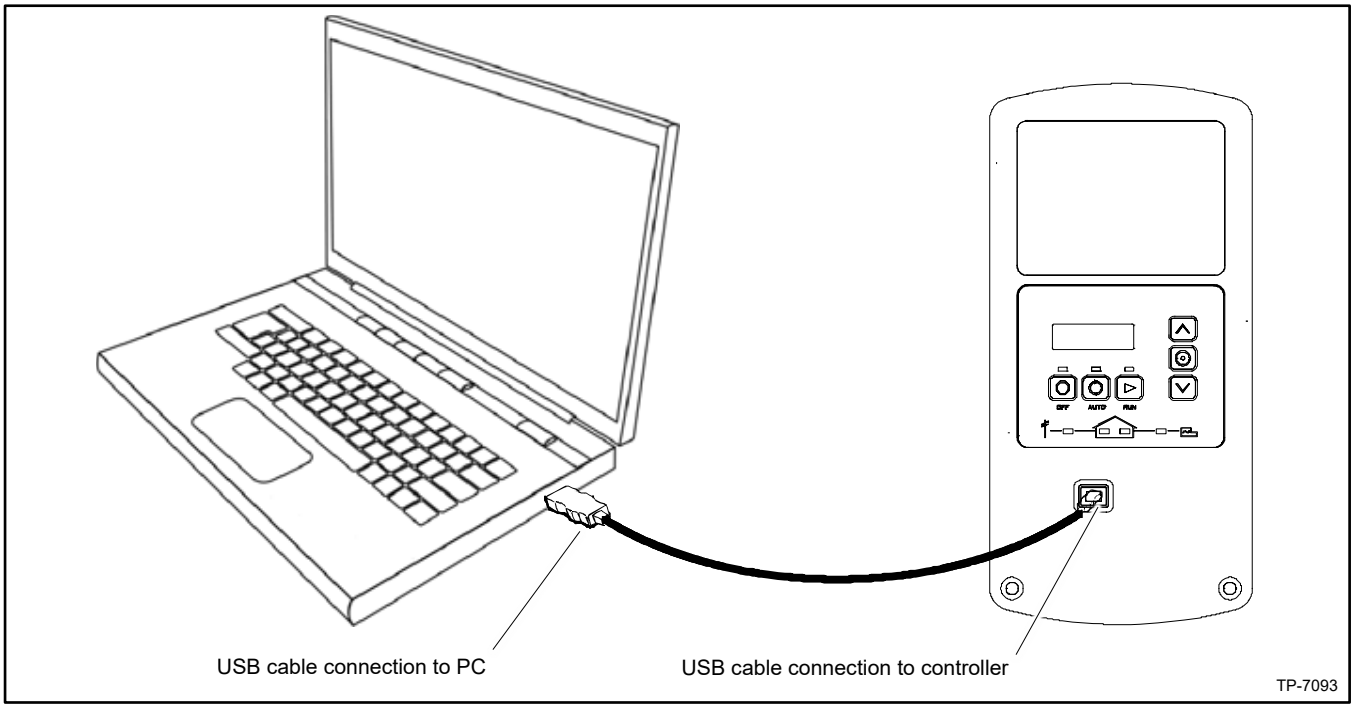

Figure 27 USB Connection

4.3 Controller Parameters

Adjustable parameter settings can be changed using a personal computer (or laptop) with SiteTech™ software. See the SiteTech Software section for USB connection information. See the SiteTech Operation Manual, TP-6701, for general software operation instructions.

Some parameter settings can also be changed at the RDC2 controller. See the generator set operation manual for instructions to navigate through the controller menus and change settings.

4.3.1 Controller Parameters Table

The table on the following pages lists controller parameters that are visible in SiteTech. Parameters marked Read Only are not user-adjustable.

Some parameters that are visible in SiteTech do not apply to the generator set models covered in this manual. Those parameters are marked N/A in the last column, and the line in the table is shaded gray.

Parameters that apply to an optional Model RXT transfer switch, programmable interface module (PIM), or load management device (LCM, load shed kit, or RXT combined interface/load management board) are noted in the last column.

The table indicates the following:

- The group in SiteTech that contains the parameter
- Factory default settings
- Units for the setting (e.g. RPM)
- Adjustment range for user-adjustable settings

4.3.2 Notes on Selected Parameters

Temperature Settings

In SiteTech, all temperature settings are shown in degrees F but stored as degrees C. When you highlight a parameter value (click it), the °F value changes to the equivalent °C value. Enter temperature settings in °F. The new setting is calculated from a conversion equation, so the final value may include some rounding that makes the setting higher or lower by 1 degree.

Engine Speed Governor Settings

Engine Speed Adjustment. The default setting for the engine speed adjustment is 50. This gives engine speeds of 3600 RPM for 60 Hz models, and 3000 RPM for 50 Hz models. See the Engine Speed Adjustment for Governor section for instructions to adjust the engine speed, if necessary.

Note:
The system frequency must be set correctly before adjusting the engine speed setting.

Engine Speed Gain Adjustment. The recommended setting for the engine speed gain adjustment is 50, which is the default setting. See the Engine Speed Gain Adjustment for the Governor section for instructions to adjust the Engine Speed Gain, if necessary.

Genset Info

Model numbers and serial numbers are factory-set for each unit. If the controller is replaced, the genset model number and serial number will need to be entered by the installer. For the genset model number, select the appropriate model from the dropdown list. Find the generator set serial number on the nameplate and enter it using SiteTech. See the Controller Replacement section for information about other setup required on a replacement controller.

Changing the genset model number will update the engine model number automatically. Select the genset model number and then click Apply Changes in SiteTech to see the updated engine model number.

Genset Fuel Type

The Genset Fuel Type setting is located in the Genset System Configuration group in SiteTech. Generator set power and current ratings are different for different fuel types (natural gas or LP). The fuel type setting is available in SiteTech with controller firmware versions 4.5 and higher.

Changing the Genset Fuel Type setting automatically updates the Genset Power Rating and Genset Rated Current settings. The power rating is used to determine setpoints for the optional load management device. If load management device is connected and the generator set is converted to a different fuel, use SiteTech to change the Genset Fuel Type setting.

Digital Inputs and Outputs

Digital inputs and outputs are available only if the optional Programmable Interface Module (PIM) is connected to the RDC2 controller. One PIM provides two digital inputs and 6 digital outputs.

Dropdown menus allow selection of the digital input and output events. Be sure to select Digital Inputs B1-B2 and Digital Outputs B1-B6 in SiteTech. Digital Inputs A1-A2 and Digital Outputs A1-A2 do not apply to the PIM. Digital outputs B7-B12 are reserved for load management and cannot be changed by the user. These outputs will display the load management relay status.

Refer to Installation Instruction Sheet TT-1584, provided with the PIM, for information about the input and output events.

RBUS Devices

Up to four RBUS modules can be connected to the generator set. RBUS modules can include one Model RXT transfer switch, one programmable interface module (PIM), one automatic paralleling module (APM), and one load management device (load control module (LCM), load shed kit, or the RXT combined interface/load management board). If two generators are paralleled using the APM, the second generator is also considered an RBUS device but does not reduce the number of RBUS modules that can be used.

Note:
An RXT transfer switch with the combined interface/load management board counts as two RBUS devices (unless load management is disabled on the combined board).

Load Management Devices

A load management device can be a load control module (LCM), a load shed kit installed in an RDT or RXT transfer switch, or a combined interface/load management board installed in an RXT transfer switch. Only one load management device can be connected. The load management device counts as one RBUS device.

A relay module (GM92001-KP1-QS) is a power relay designed for use with the load shed kit or the combined interface/load management board. The relay module does not act as an RBUS device. See TT-1646.

SiteTech Group	Parameter	Units	Adjustment Range *	Default Setting	Notes †
Identity	Vendor		Read Only	Company	
	Product		Read Only	RDC 2	
	Firmware Version		Read Only	N/A	
Engine Metering	Engine Speed	R/min	Read Only	N/A	
	Engine Target Speed	R/min	Read Only	N/A	
	Engine Oil Pressure	kPa	Read Only	N/A	
	Engine Coolant Temperature	°C	Read Only	N/A	N/A
	Battery Voltage	V	Read Only	N/A	
	Lube Oil Temperature	°C	Read Only	N/A	
	Genset Controller Temperature	°C	Read Only	N/A	
	Engine Low Oil Pressure Switch		Read Only	N/A	
	Engine Compartment Temperature	°C	Read Only	N/A	N/A
Engine Speed Governor	Engine Speed Adjustment		0-99 See the Notes on Selected Parameter section.	50	
	Engine Speed Gain Adjustment		35-65	50	
Generator Metering	Generator Rotation Actual		Read Only	N/A	3-phase
	Generator Current Lead/Lag L1		Read Only	N/A	N/A
	Generator Current Lead/Lag L2		Read Only	N/A	N/A
	Generator Current Lead/Lag L3		Read Only	N/A	3-phase
	Generator Current Total Lead/Lag		Read Only	N/A	N/A
	Generator Power Factor L1		Read Only	N/A	N/A
	Generator Power Factor L2		Read Only	N/A	N/A
	Generator Power Factor L3		Read Only	N/A	3-phase
	Generator Total Power Factor		Read Only	N/A	N/A
	Generator Apparent Power L1	VA	Read Only	N/A	N/A
	Generator Apparent Power L2	VA	Read Only	N/A	N/A
	Generator Apparent Power L3	VA	Read Only	N/A	N/A
	Generator Total Apparent Power	VA	Read Only	N/A	N/A
	Generator Reactive Power L1	VAR	Read Only	N/A	N/A
	Generator Reactive Power L2	VAR	Read Only	N/A	N/A
	Generator Reactive Power L3	VAR	Read Only	N/A	N/A
	Generator Total Reactive Power	VAR	Read Only	N/A	N/A
	Generator True Power L1	W	Read Only	N/A	N/A
	Generator True Power L2	W	Read Only	N/A	N/A
	Generator True Power L3	W	Read Only	N/A	3-phase
	Generator True Total Power	W	Read Only	N/A	N/A
	Generator True Percent Of Rated Power	%	Read Only	N/A	N/A
	Generator Voltage L1-L2	V	Read Only	N/A	
	Generator Voltage L2-L3	V	Read Only	N/A	3-phase APM
	Generator Voltage L3-L1	V	Read Only	N/A	3-phase
	Generator Voltage Average Line To Line	V	Read Only	N/A	

* Read Only = Not adjustable
† Notes indicate applicability to genset model and accessories. N/A = Not applicable to these generator sets.
‡ See TT-1584 for more information about digital inputs and outputs.
§ Load management device (LCM, load shed kit, or RXT with combined interface/load management board)

SiteTech Group	Parameter	Units	Adjustment Range *	Default Setting	Notes †
Generator Metering	Generator Current L1	A	Read Only	N/A	N/A
	Generator Current L2	A	Read Only	N/A	N/A
	Generator Current L3	A	Read Only	N/A	3-phase
	Generator Current Average	A	Read Only	N/A	
	Generator Frequency	Hz	Read Only	N/A	
Genset Info	Genset Model Number Select		Dropdown list: 14kW 20kW 26RCA-0 and 26RCA-A	Factory set per unit. See the Notes on Selected Parameters section	
	Genset Serial Number		0-20 characters		
	Alternator Part Number		0-20 characters		N/A
	Genset Controller Serial Number		1-10 characters		
	Engine Part Number		0-20 characters		N/A
	Engine Model Number		CH-740 (14) or CH-1000 (20) CH-1006 (26) (Selected automatically with genset model)		
	Engine Serial Number		0-10 characters		N/A
	Genset State	N/A	Read Only	N/A	
Genset Run Time	Genset Controller Clock Time		Read Only	N/A	
	Genset Controller Total Operation Time	h	Read Only	N/A	
	Engine Total Run Time	h	Read Only	N/A	
	Engine Total Run Time Loaded	h	Read Only	N/A	N/A
	Engine Total Number Of Starts		Read Only	N/A	
	Genset Date Time Of Last Maintenance		Read Only (See the Resetting the Maintenance Timer section.)	1/1/01 12:00:00 AM	
	Engine Run Time Until Maintenance	h	Read Only	100.0	
	Genset Controller Date Format		MM/DD/YYYY or DD/MM/YYYY	MM/DD/YYYY	
	Genset Controller Time Format		12 or 24 hr	12 Hr	
	Genset Date Time of Next Maintenance		Read Only	N/A	
	Maintenance Period In Days	days	Read Only	365	
	Maintenance Period Remaining	s	Read Only	31536000	
	Genset Controller Clock Time Zone Offset		Read Only	1/1/01 12:00:00 AM	
Genset Personality Profile	ECM Model		**DO NOT CHANGE**	No ECM	N/A
	Maximum Alternator Current	A	Read Only	920	
	Engine Number Of Flywheel Teeth		Locked	1	
	Engine Warmed Up Temperature	°C/F	77-140 °C	90°C	N/A.
	Engine Cooled Down Temperature	°C/F	Locked	79°C	
	Engine Crank Disconnect Speed	RPM	300-1000	750	
	Engine Idle Speed	RPM	DO NOT CHANGE	2700	
	Engine Run Speed	RPM	1000-3900	3600	
	Engine Coolant Temperature Protectives Enabled		No effect.		N/A
	Engine Coolant Temperature Sensor		No effect.		N/A
	Engine High Coolant Temperature Inhibit Delay	s	No effect.		N/A
	Engine Low Coolant Temperature Warning Delay	s	No effect.		N/A

* Read Only = Not adjustable

† Notes indicate applicability to genset model and accessories. N/A = Not applicable to these generator sets.

‡ See TT-1584 for more information about digital inputs and outputs.

§ Load management device (LCM, load shed kit, or RXT with combined interface/load management board)

SiteTech Group	Parameter	Units	Adjustment Range *	Default Setting	Notes †
Genset Personality Profile	Engine High Coolant Temperature Warning Delay	s	No effect.		N/A
	Engine Low Coolant Temperature Shutdown Delay	s	No effect.		N/A
	Engine High Coolant Temperature Shutdown Delay	s	No effect.		N/A
	Engine Low Coolant Temperature Warning Limit	°C/F	No effect.		N/A
	Engine High Coolant Temperature Warning Limit	°C/F	No effect.		N/A
	Engine High Coolant Temperature Shutdown Limit	°C/F	No effect.		N/A
	Engine Coolant Temperature Deadband	°C/F	No effect.		N/A
	Personality Alternator Manufacturer		No effect.		N/A
	Personality Alternator Toc Time Constant	s	No effect.		N/A
	Personality Alternator Number Of Poles		No effect.		N/A
	Personality Alternator Type		No effect.		N/A
	Personality Fixed Voltage 50 Hz	V	No effect.		N/A
	Personality Power Rating Single Phase 50 Hz 10 PF	kW	No effect.		N/A
	Personality Power Rating Single Phase 50 Hz 8 PF	kW	No effect.		N/A
	Personality Power Rating Fixed Volt 50 Hz	kW	No effect.		N/A
	Personality Power Rating 50 Hz 220 440	kW	No effect.		N/A
	Personality Power Rating 50 Hz 208 415	kW	No effect.		N/A
	Personality Power Rating 50 Hz 200 400	kW	No effect.		N/A
	Personality Power Rating 50 Hz 190 380	kW	No effect.		N/A
	Personality Power Rating 50 Hz 173 346	kW	No effect.		N/A
	Personality Power Rating 50 Hz Delta	kW	No effect.		N/A
	Personality Fixed Voltage 60 Hz	V	No effect.		N/A
	Personality Power Rating Single Phase 60 Hz 10 PF	kW	No effect.		N/A
	Personality Power Rating Single Phase 60 Hz 8 PF	kW	No effect.		N/A
	Personality Power Rating Fixed Volt 60 Hz	kW	No effect.		N/A
	Personality Power Rating 60 Hz 240 480	kW	No effect.		N/A
	Personality Power Rating 60 Hz 230 460	kW	No effect.		N/A
	Personality Power Rating 60 Hz 220 440	kW	No effect.		N/A
	Personality Power Rating 60 Hz 208 416	kW	No effect.		N/A
	Personality Power Rating 60 Hz 190 380	kW	No effect.		N/A
	Personality Power Rating 60 Hz Delta	kW	No effect.		N/A
	Personality Installed Options		No effect		N/A
Genset System Configuration	Genset System Voltage	V	110-600	240.0	
	Genset System Frequency	Hz	50/60	60.0	
	Genset Voltage Phase Connection		Dropdown menu	Single Phase	
	Genset Power Rating	kW	DO NOT CHANGE	Auto select based on genset model and fuel type	
	Genset Rated Current	A	Read Only		Load Mgmt§
	Genset System Battery Voltage	V	12/24	12	
	Prime Power Application		Standby or prime	Standby	N/A

* Read Only = Not adjustable

† Notes indicate applicability to genset model and accessories. N/A = Not applicable to these generator sets.

‡ See TT-1584 for more information about digital inputs and outputs.

§ Load management device (LCM, load shed kit, or RXT with combined interface/load management board)

SiteTech Group	Parameter	Units	Adjustment Range *	Default Setting	Notes †
Genset System Configuration	Current Transformer Ratio		Locked	400	Load Mgmt§
	Local Start Mode		Read Only	Off	
	Measurement System		English or metric	English	
	ECM Power		True or False	False	N/A
	Display Contrast		0-100	50	
	Genset System Language		No effect.	English	N/A
	Genset Maximum Percent Capacity	%	0-120	70.0	Load Mgmt§
	Generator Overloaded Percent	%	0-120	85.0	
	Under Frequency Shed Level	Hz	0-5	0.5	
	Base Load Add Time	s	10-2400	60	
	Base Over Load Shed Time	s	2-30	30	
	Base Under Frequency Shed Time	s	1-20	5	
	Genset Fuel Type (firmware versions 4.5 or higher)		Natural Gas or LP (pulldown)	Natural Gas	
	Automatic Start Minimum Voltage	V	15-60	51	
	Automatic Stop Minimum Percent Load	%	0-100	20	
	Automatic Start Minimum Voltage Delay	s	1-3600	180	
	Automatic Stop Minimum Load Delay	s	1-3600	180	
	ECM Powered Mode		On or Off	Off	
Genset Calibration	Genset Calibration Factor Voltage L1-L2		0.9-1.1	1.0063	
	Genset Calibration Factor Voltage L2-L3		0.9-1.1	0.9909	3-phase
	Genset Calibration Factor Voltage L3-L1		0.9-1.1	0.9427	3-phase
	Genset Calibration Factor Current L1		0.9-1.1	1.000000	Load Mgmt§
	Genset Calibration Factor Current L2		0.9-1.1	1.000000	N/A
Voltage Regulator	Voltage Regulator Average Voltage Adjustment	V	108-660 (Auto select with system voltage)	240.0 (System voltage)	
	Voltage Regulator Volts Per Hertz Slope	%	1-10	5	
	Voltage Regulator Volts Per Hertz Cut In Frequency	Hz	42-62	59	
	Voltage Regulator Gain		1-255	16	
	Voltage Regulator Firmware Version		Read Only	N/A	N/A
Engine Timing	Engine Start Delay	s	0-300	0	
	Engine Cool Down Delay	s	300-600	300	
	Engine Crank On Delay	s	10-30	15	
	Engine Crank Pause Delay	s	1-60	15	
	Engine Number Of Crank Cycles		1-6	3	
Genset Protection	Genset Low Battery Voltage Warning Delay	s	Read Only	90	
	Genset High Battery Voltage Warning Delay	s	Read Only	10	
	Genset Low Battery Voltage Warning Limit	%	80-100	100	
	Genset High Battery Voltage Warning Limit	%	110-135	125	

* Read Only = Not adjustable

† Notes indicate applicability to genset model and accessories. N/A = Not applicable to these generator sets.

‡ See TT-1584 for more information about digital inputs and outputs.

§ Load management device (LCM, load shed kit, or RXT with combined interface/load management board)

SiteTech Group	Parameter	Units	Adjustment Range *	Default Setting	Notes †
Genset Protection	Genset Battery Low Cranking Voltage Warning Delay	s	Read Only	6	
	Genset Battery Low Cranking Voltage Warning Limit	%	Read Only	60	
Engine Protection	Engine Low Oil Pressure Shutdown Delay	s	5	5	
	Engine Locked Rotor Shutdown Delay	s	3	3	
	Genset Low Engine Speed Shutdown Limit	%	75-95	85	
	Genset High Engine Speed Shutdown Limit	%	105-120	115	
	Engine Low Oil Pressure Warning Limit	kPa	No effect.		N/A
	Engine High Oil Pressure Shutdown Limit	kPa	No effect.		N/A
Generator Protection	Loss Of AC Sensing Shutdown Delay	s	Read Only	3	
	Genset Low Voltage Shutdown Delay	s	Read Only	10	
	Genset High Voltage Shutdown Delay	s	Read Only	2	
	Genset Low Voltage Shutdown Limit	%	Read Only	80	
	Genset High Voltage Shutdown Limit	%	Read Only	120	
	Genset Short Term Low Frequency Shutdown Delay	s	Read Only	10	
	Genset Long Term Low Frequency Shutdown Delay	s	Read Only	60	
	Genset High Frequency Shutdown Delay	s	Read Only	10	
	Genset Low Frequency Shutdown Limit	%	Read Only	90	
	Genset High Frequency Shutdown Limit	%	Read Only	110	
Digital Input A1	Digital Input A1 Value		Read Only	False	N/A
	Digital Input A1 Enabled		True or False	True	N/A
	Digital Input A1 Event		See dropdown list in SiteTech. ‡	Fuel Pressure Low Warning	N/A
Digital Input A2	Digital Input A2 Value		Read Only	False	N/A
	Digital Input A2 Enabled		True or False	True	N/A
	Digital Input A2 Event		See dropdown list in SiteTech. ‡	Auxiliary Input Warning	N/A
Digital Input B1	Digital Input B1 Value		Read Only	False	PIM
	Digital Input B1 Enabled		True or False	False	
	Digital Input B1 Event		See dropdown list in SiteTech. ‡	None (0)	
Digital Input B2	Digital Input B2 Value		Read Only	False	PIM
	Digital Input B2 Enabled		True or False	False	
	Digital Input B2 Event		See dropdown list in SiteTech. ‡	None (0)	
Digital Output A1	Digital Output A1 Value		Read Only	False	N/A
	Digital Output A1 Event		See dropdown list in SiteTech. ‡	NFPA 110 Alarm Active	N/A
Digital Output A2	Digital Output A2 Value		Read Only	N/A	N/A
	Digital Output A2 Event		See dropdown list in SiteTech. ‡	N/A	N/A
Digital Output B1	Digital Output B1 Value		Read Only	False	PIM
	Digital Output B1 Event		See dropdown list in SiteTech. ‡	Generator Running	
Digital Output B2	Digital Output B2 Value		Read Only	False	PIM
	Digital Output B2 Event		See dropdown list in SiteTech. ‡	Common Fault	

* Read Only = Not adjustable
† Notes indicate applicability to genset model and accessories. N/A = Not applicable to these generator sets.
‡ See TT-1584 for more information about digital inputs and outputs.
§ Load management device (LCM, load shed kit, or RXT with combined interface/load management board)

SiteTech Group	Parameter	Units	Adjustment Range *	Default Setting	Notes †
Digital Output B3	Digital Output B3 Value		Read Only	False	PIM
	Digital Output B3 Event		See dropdown list in SiteTech. ‡	Low Battery Voltage Warning	
Digital Output B4	Digital Output B4 Value		Read Only	False	PIM
	Digital Output B4 Event		See dropdown list in SiteTech. ‡	Not In Auto Warning	
Digital Output B5	Digital Output B5 Value		Read Only	False	PIM
	Digital Output B5 Event		See dropdown list in SiteTech. ‡	Engine Cool Down Active	
Digital Output B6	Digital Output B6 Value		Read Only	False	PIM
	Digital Output B6 Event		See dropdown list in SiteTech. ‡	Normal Source Failure	
Digital Output B7	Digital Output B7 Value		Read Only	False	Load Mgmt§
	Digital Output B7 Event		Read Only	65004	
Digital Output B8	Digital Output B8 Value		Read Only	False	
	Digital Output B8 Event		Read Only	65007	
Digital Output B9	Digital Output B9 Value		Read Only	False	
	Digital Output B9 Event		Read Only	65003	
Digital Output B10	Digital Output B10 Value		Read Only	False	
	Digital Output B10 Event		Read Only	65005	
Digital Output B11	Digital Output B11 Value		Read Only	False	
	Digital Output B11 Event		Read Only	65006	
Digital Output B12	Digital Output B12 Value		Read Only	False	
	Digital Output B12 Event		Read Only	65008	
ATS Metering Summary	ATS Contactor Position		Read Only	N/A	RXT
	ATS Sources Available		Read Only	N/A	
Source 1 Metering	Source 1 Rotation Actual		Read Only	N/A	RXT
	Source 1 Voltage L1-L2	V	Read Only	N/A	
	Source 1 Voltage L2-L3	V	Read Only	N/A	
	Source 1 Voltage L3-L1	V	Read Only	N/A	
	Source 1 Voltage Average Line To Line	V	Read Only	N/A	
	Source 1 Frequency	Hz	Read Only	N/A	
Source 2 Metering	Source 2 Rotation Actual		Read Only	N/A	RXT
	Source 2 Voltage L1-L2	V	Read Only	N/A	
	Source 2 Voltage L2-L3	V	Read Only	N/A	
	Source 2 Voltage L3-L1	V	Read Only	N/A	
	Source 2 Voltage Average Line To Line	V	Read Only	N/A	
	Source 2 Frequency	Hz	Read Only	N/A	
ATS Connection Configuration	ATS Source		Read Only	N/A	RXT
Source 1 System Configuration	Source 1 System Voltage	V	110.0-600.0 (Auto select with system voltage)	Genset System Voltage	RXT
	Source 1 System Frequency	Hz	48.0-62.0 (Auto select with system frequency)	Genset System Frequency	
	Source 1 Voltage Debounce Delay	s	1-99	0.5	
	Source 1 Low Voltage Pickup	%	85-100	90	
	Source 1 Low Voltage Dropout	%	75-98	90	

* Read Only = Not adjustable

† Notes indicate applicability to genset model and accessories. N/A = Not applicable to these generator sets.

‡ See TT-1584 for more information about digital inputs and outputs.

§ Load management device (LCM, load shed kit, or RXT with combined interface/load management board)

SiteTech Group	Parameter	Units	Adjustment Range *	Default Setting	Notes †
Source 1 Calibration	Source 1 Calibration Factor Voltage L1-L2		Read Only	1	RXT
	Source 1 Calibration Factor Voltage L2-L3		Read Only	1	RXT
	Source 1 Calibration Factor Voltage L3-L1		Read Only	1	RXT
Source 2 System Configuration	Source 2 System Voltage	V	110.0-600.0 (Auto select with system voltage)	Genset System Voltage	RXT
	Source 2 System Frequency	Hz	48.0-62.0 (Auto select with system frequency)	Genset System Frequency	
	Source 2 Voltage Debounce Delay	s	0.1-9.9	0.5	
	Source 2 Low Voltage Pickup	%	85-100	90	
	Source 2 Low Voltage Dropout	%	75-98	90	
Source 2 Calibration	Source 2 Calibration Factor Voltage L1-L2		Read Only	1	RXT
	Source 2 Calibration Factor Voltage L2-L3		Read Only	1	
	Source 2 Calibration Factor Voltage L3-L1		Read Only	1	
ATS Exercise	Exercise Interval for 14/20RCA(L)		Weekly or Every Other Week or Monthly	Weekly	RXT
	Exercise Interval for 26RCA(L)		Weekly or Every Other Week or Monthly	Monthly	
	Exercise Run Duration 14/20RCA(L)	min	10-30	20	
	Exercise Run Duration 26RCA(L)	s	1-100	90	
	Exercise Mode for 14/20RCA(L)		Pulldown See List	Unloaded Cycle (2)	
	Exercise Mode for 26RCA(L)		Pulldown See List	Eco Exercise	
	Exercise Warning Enabled		True or False	True	
ATS Delays	ATS Transfer From Preferred Delay	s	1-10	3	RXT
	ATS Transfer From Standby Delay	s	1-600	120	
	ATS Source 2 Engine Start Delay	s	1-10	3	
Modbus	Is Modbus Master		True or False	False	
Network Configuration	DHCP Enabled		True or False	True	KOHLER Energy Management
	Static IP Address		0.0.0.0 - 255.255.255.255	0.0.0.0	
	Static Subnet Mask		0.0.0.0 - 255.255.255.255	0.0.0.0	
	Static Default Gateway		0.0.0.0 - 255.255.255.255	0.0.0.0	
	Static DNS Server 1		0.0.0.0 - 255.255.255.255	0.0.0.0	
	Static DNS Server 2		0.0.0.0 - 255.255.255.255	0.0.0.0	
	Server Host Name		devices.kohler.com	devices.kohler.com	
Network Status	IP Address		Read Only	0.0.0.0	KOHLER Energy Management
	Subnet Mask		Read Only	0.0.0.0	
	Default Gateway		Read Only	0.0.0.0	
	DNS Server 1		Read Only	0.0.0.0	
	DNS Server 2		Read Only	0.0.0.0	
	MAC Address		Read Only	N/A	
	Connected Server IP Address		Read Only	0.0.0.0	
	Network Connection Established		Read Only	False	
	Media Connected		Read Only	False	

* Read Only = Not adjustable

† Notes indicate applicability to genset model and accessories. N/A = Not applicable to these generator sets.

‡ See TT-1584 for more information about digital inputs and outputs.

§ Load management device (LCM, load shed kit, or RXT with combined interface/load management board)

SiteTech Group	Parameter	Units	Adjustment Range *	Default Setting	Notes †
Rbus Network	Rbus Active		Read Only	False	
	Rbus Connection Count		Read Only	0	
	Rbus Net Cycle Time	ms	Read Only	100	
	Rbus Timeouts		Read Only	0	
	Rbus Errors		Read Only	0	
Rbus Devices B1	Rbus Devices B1 Serial Number		Read Only	N/A	RXT, PIM, or Load Mgmt§
	Rbus Devices B1 Type		Read Only	N/A	
	Rbus Devices B1 Communication Errors		Read Only	N/A	
	Rbus Devices B1 Communication Timeouts		Read Only	N/A	
	Rbus Devices B1 Modbus Id		Read Only	N/A	
	Rbus Devices B1 Last Connection Date		Read Only	N/A	
	Rbus Devices B1 Firmware Version		Read Only	N/A	
	Rbus Devices B1 Connected		Read Only	N/A	
Rbus Devices B2	Rbus Devices B2 Serial Number		Read Only	N/A	RXT, PIM, or Load Mgmt§
	Rbus Devices B2 Type		Read Only	N/A	
	Rbus Devices B2 Communication Errors		Read Only	N/A	
	Rbus Devices B2 Communication Timeouts		Read Only	N/A	
	Rbus Devices B2 Modbus Id		Read Only	N/A	
	Rbus Devices B2 Last Connection Date		Read Only	N/A	
	Rbus Devices B2 Firmware Version		Read Only	N/A	
	Rbus Devices B2 Connected		Read Only	N/A	
Rbus Devices B3	Rbus Devices B3 Serial Number		Read Only	N/A	RXT, PIM, or Load Mgmt§
	Rbus Devices B3 Type		Read Only	N/A	
	Rbus Devices B3 Communication Errors		Read Only	N/A	
	Rbus Devices B3 Communication Timeouts		Read Only	N/A	
	Rbus Devices B3 Modbus Id		Read Only	N/A	
	Rbus Devices B3 Last Connection Date		Read Only	N/A	
	Rbus Devices B3 Firmware Version		Read Only	N/A	
	Rbus Devices B3 Connected		Read Only	N/A	
Rbus Devices B4	Rbus Devices B4 Serial Number		Read Only	N/A	N/A
	Rbus Devices B4 Type		Read Only	N/A	N/A
	Rbus Devices B4 Communication Errors		Read Only	N/A	N/A
	Rbus Devices B4 Communication Timeouts		Read Only	N/A	N/A
	Rbus Devices B4 Modbus Id		Read Only	N/A	N/A
	Rbus Devices B4 Last Connection Date		Read Only	N/A	N/A
	Rbus Devices B4 Firmware Version		Read Only	N/A	N/A
	Rbus Devices B4 Connected		Read Only	N/A	N/A
Rbus Devices B5	Rbus Devices B5 Serial Number		Read Only	N/A	N/A
	Rbus Devices B5 Type		Read Only	N/A	N/A
	Rbus Devices B5 Communication Errors		Read Only	N/A	N/A
	Rbus Devices B5 Communication Timeouts		Read Only	N/A	N/A
	Rbus Devices B5 Modbus Id		Read Only	N/A	N/A
	Rbus Devices B5 Last Connection Date		Read Only	N/A	N/A
	Rbus Devices B5 Firmware Version		Read Only	N/A	N/A
	Rbus Devices B5 Connected		Read Only	N/A	N/A

* Read Only = Not adjustable

† Notes indicate applicability to genset model and accessories. N/A = Not applicable to these generator sets.

‡ See TT-1584 for more information about digital inputs and outputs.

§ Load management device (LCM, load shed kit, or RXT with combined interface/load management board)

SiteTech Group	Parameter	Units				Adjustment Range
		14kW	20kW	26RCA-0	26RCA-A	
Advanced Speed Control	Proportional Gain	1	1	1	0.75	Factory set per unit. **DO NOT CHANGE** unless instructed by the Kohler Generator Service Department.
	Transient Integral Gain	1	1	0.8	0.2	
	Derivative Gain	1	1	0.8	0.2	
	Slow Correction Integral Gain	1	1	0.75	0.2	
	Diagnostic Derivative Gain	1	1	0.5	0.5	
	Diagnostic Transient Integral Gain	1	0.3	0.3	0.3	
	Idle Proportional Gain	2.25	2.25	2.25	2	
	Idle Transient Integral Gain	0	0	0	0.05	
	Idle Derivative Gain	0.1	0.1	0.1	0.1	
	Idle Slow Correction Integral Gain	0.15	0.15	0.15	0.1	

4.4 Controller Firmware

4.4.1 Firmware Version

The manufacturer may release new versions of controller firmware. dealers can download the latest software from the Service Support area of the Kohler Power Resource Center website or from the Downloads section of the Dealer Portal. Controller firmware is also available for download on the dealer portal and at www.KohlerGenerators.com/usb.

26RCA has two different firmware versions that are linked with the physical mixer/stepper hardware installed on the genset. If the generator nameplate contains an “A” it means 26RCA-BASE01A, customers must use RDC2 firmware 3.4.5 or higher version. The model’s name for the base “A” model is also 26RCA-A within the model information drop down in SiteTech. Please refer to SB-823 for more details. If the 26RCA generator does not have an “A” in the base number, then the technician should choose “26RCA-0” from the model information drop down box.

The firmware version number is shown in the RDC2 controller’s Overview menu. See SW Version in Figure 28. The firmware version number is also displayed in SiteTech™ and KOHLER Energy Management app. To check the firmware version number, select the parameters view in SiteTech or KOHLER Energy Management app. The firmware version number is shown in the Identity Group, which is the first group displayed.

Firmware version numbers: Preceding zeroes may be dropped from firmware version numbers. For example, version number 1.03 is the same as version 1.3. The version number displayed in SiteTech may show a third number. For example, SiteTech may display version 1.3.1 for software version 1.3.

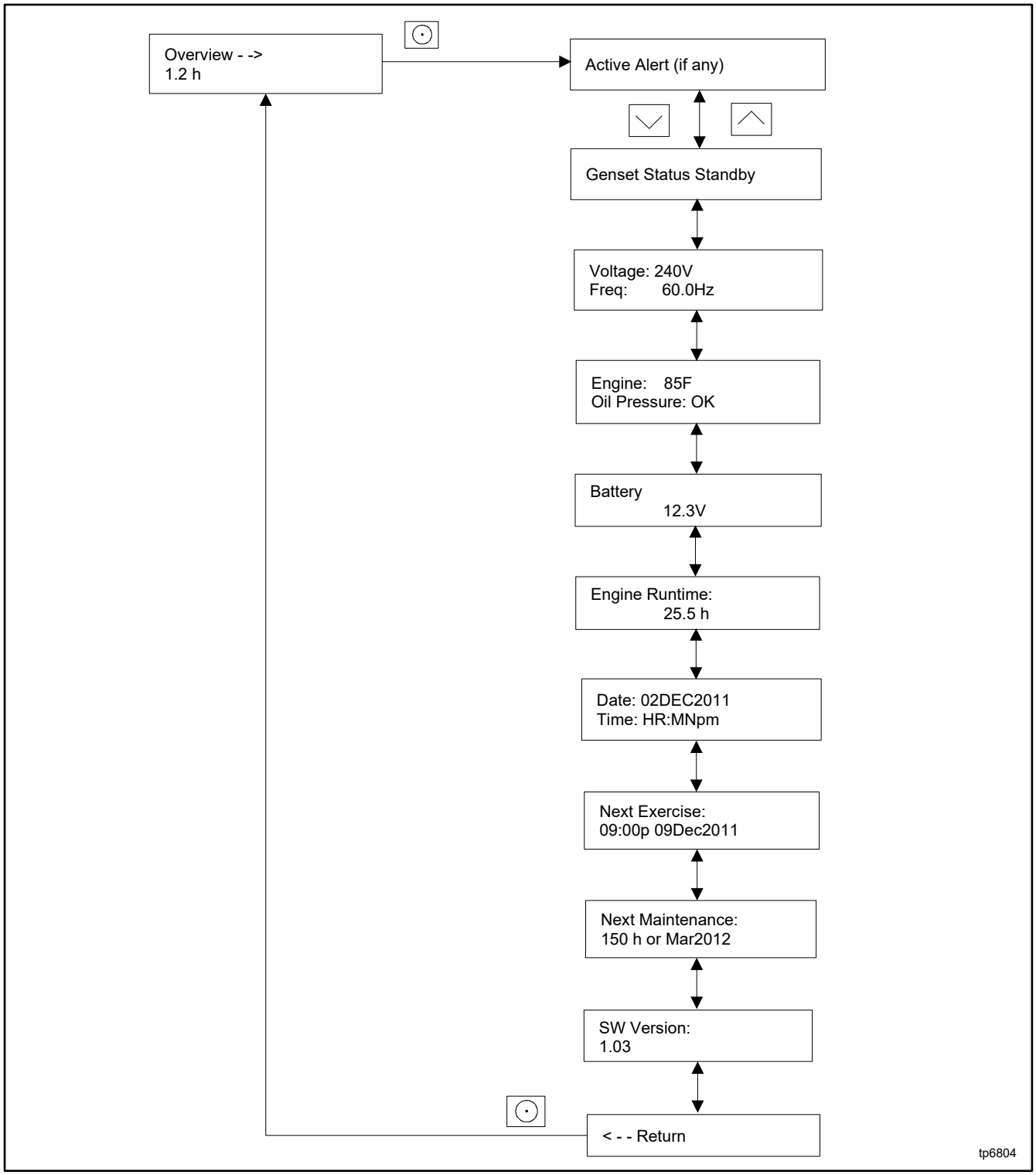

Figure 28 SW Version Number in Overview Menu

4.4.2 Firmware Update

Update the firmware on the replacement controller to the latest version. Firmware files are posted in the Service Support section of the Kohler Power Resource Center (KPRC) and on the following site: kohlergenerators.com/usb.

Firmware file names contain the controller name and the version number. For example, Rdc2v4_1_4_4.bin indicates RDC2.X controller firmware version 1.4.4.

Use a personal computer connected to the controller with a USB cable and SiteTech™ software or the USB Utility to update the controller firmware. See TT-1636 for instructions to use the USB Utility to update firmware.

Procedure to Update Software Using SiteTech

1. Download the latest RDC2 or RDC2.X firmware file from the Kohler Power Resource Center website or the dealer portal. Save the new firmware file on your PC. Be sure to note the file location. Firmware files are typically downloaded as .zip files and will need to be extracted.
2. Use a USB cable to connect the controller to a USB port on your PC. See Figure 29 for the connection.
3. Start SiteTech. The program will recognize the connected device.
4. Click on Update Firmware near the top of the screen. See Figure 30.
5. A window will open asking you to browse for the firmware file. Click the Browse button and navigate to the directory where you stored the firmware file. Firmware files have the extension.bin (for example: Rdc2v4_1_4_4.bin). Select the file and click Open.
6. The Update Device Firmware screen displays the current version number, new version number, and file name of the selected firmware file. If all of the information is correct, click Update Firmware.
7. When the update is complete, the screen will display the version numbers and the message Firmware Updated Successfully. Click Close.

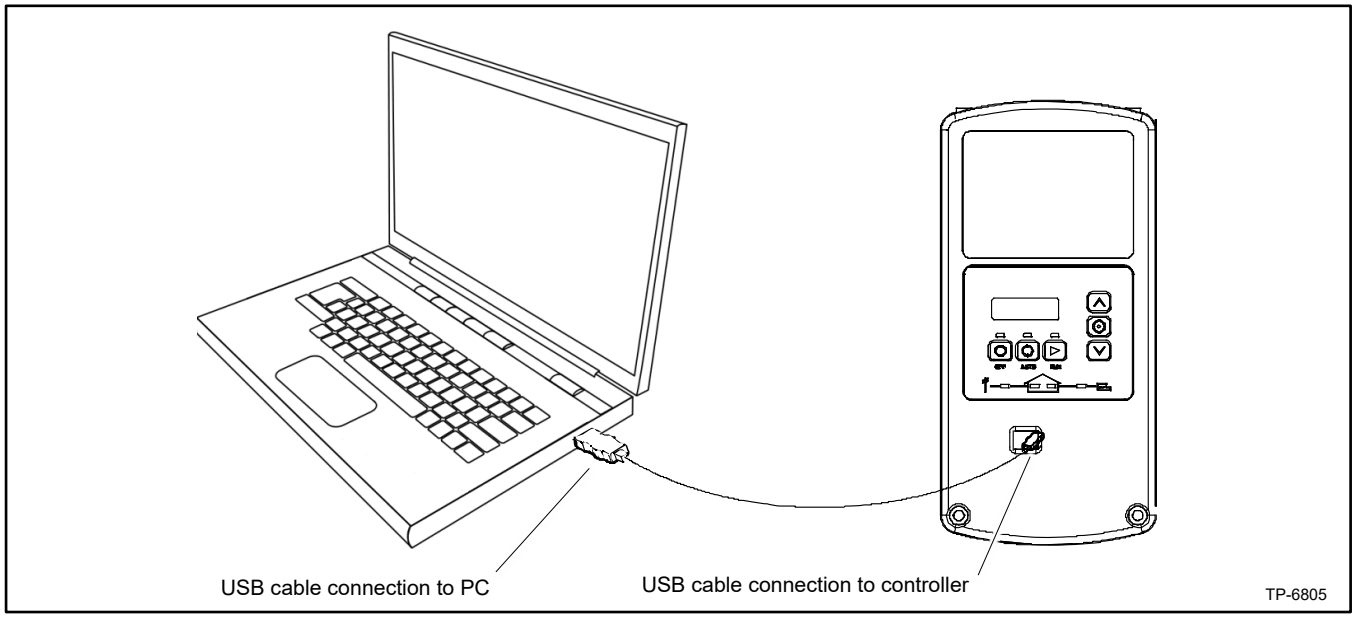

Figure 29 Controller Connection to a Laptop Computer through the USB Port

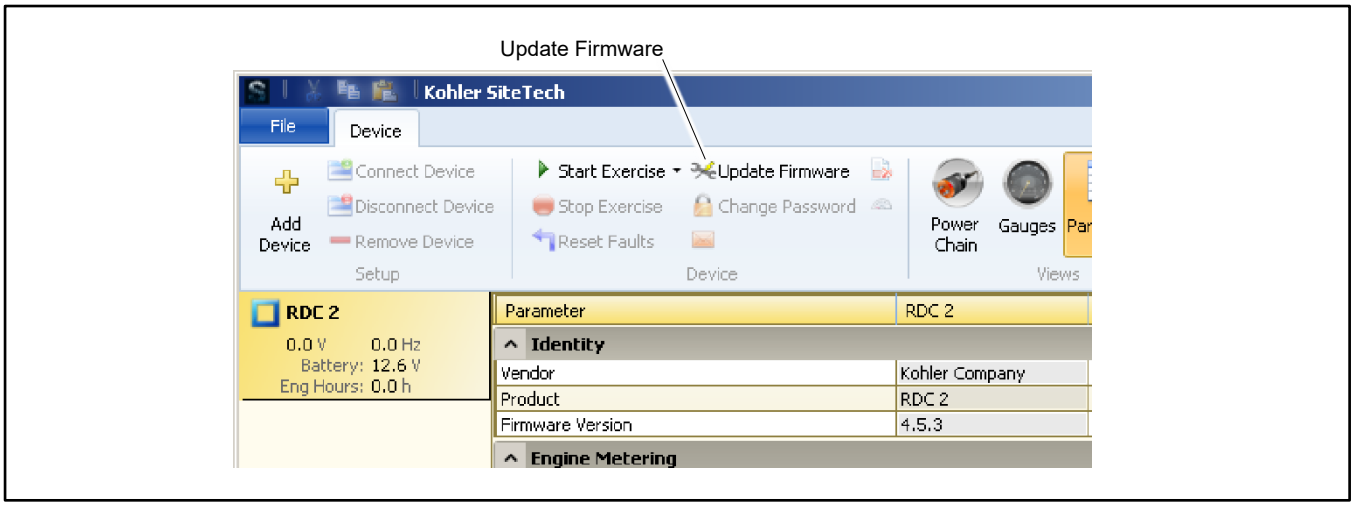

Figure 30 SiteTech Update Firmware Command

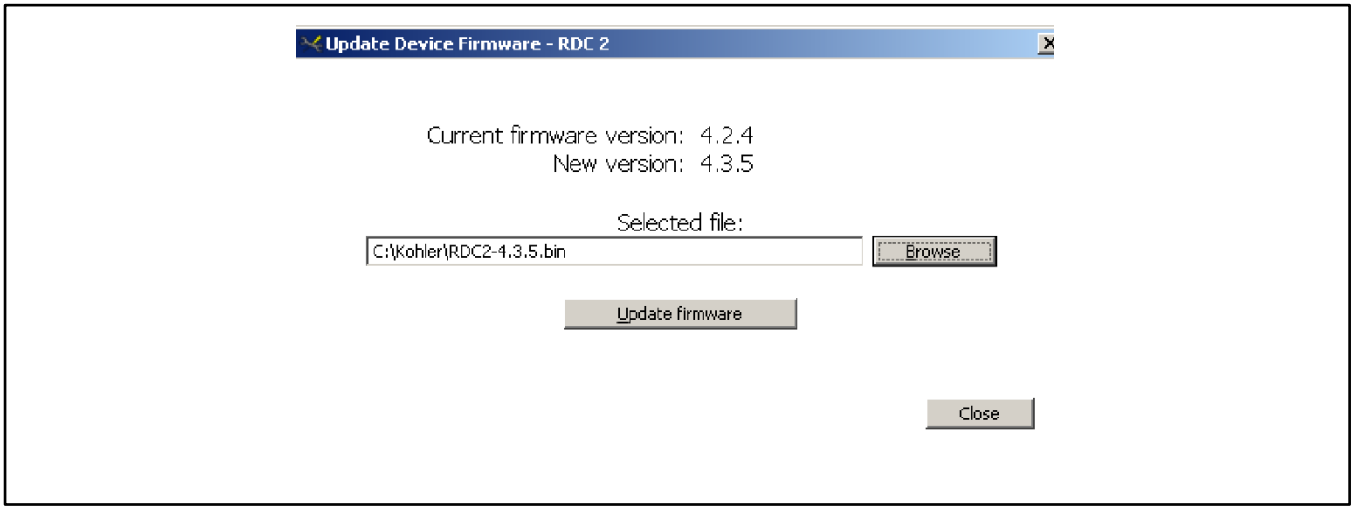

Figure 31 SiteTech Update Device Firmware Screen

4.5 Controller Replacement

⚠ WARNING	
	**Accidental starting.** **Can cause severe injury or death.** Disconnect the battery cables before working on the generator set. Remove the negative (–) lead first when disconnecting the battery. Reconnect the negative (–) lead last when reconnecting the battery.

Disabling the generator set. Accidental starting can cause severe injury or death. Before working on the generator set or equipment connected to the set, disable the generator set as follows: (1) Press the generator set off/reset button to shut down the generator set. (2) Disconnect the power to the battery charger, if equipped. (3) Remove the battery cables, negative (–) lead first. Reconnect the negative (–) lead last when reconnecting the battery. Follow these precautions to prevent the starting of the generator set by the remote start/stop switch.

⚠ DANGER	
	**Hazardous voltage.** **Will cause severe injury or death.** Disconnect all power sources before opening the enclosure.

Testing live electrical circuits. Hazardous voltage or current will cause severe injury or death. Have trained and qualified personnel take diagnostic measurements of live circuits. Use adequately rated test equipment with electrically insulated probes and follow the instructions of the test equipment manufacturer when performing voltage tests. Observe the following precautions when performing voltage tests: (1) Remove all jewelry. (2) Stand on a dry, approved electrically insulated mat. (3) Do not touch the enclosure or components inside the enclosure. (4) Be prepared for the system to operate automatically. *(600 volts and under)*

Short circuits. Hazardous voltage/current will cause severe injury or death. Short circuits can cause bodily injury and/or equipment damage. Do not contact electrical connections with tools or jewelry while making adjustments or repairs. Remove all jewelry before servicing the equipment.

Always check the controller settings, wiring, and connections before replacing the controller. Use the procedure in this section for controller replacement, when necessary.

Some setup is required after the new controller is installed. See the Controller Setup section after replacing the controller. The RDC2 controller can be set up using the buttons on the controller or using a personal (laptop) computer and SiteTech™ software.

Controller Replacement Procedure

1. Using the enclosure locking tool provided with the generator set, open the enclosure roof.
2. Press the OFF button on the controller.

   Note:
   Utility power is connected to the generator's field-connection terminal block. This power must be turned off before the controller is removed.
3. Disconnect utility power to the generator set by opening the circuit breaker in the building's distribution panel. Use a voltmeter to verify that utility power has been disconnected. See Figure 32 for the utility power connection location. See Figure 33 for the utility power connection detail.

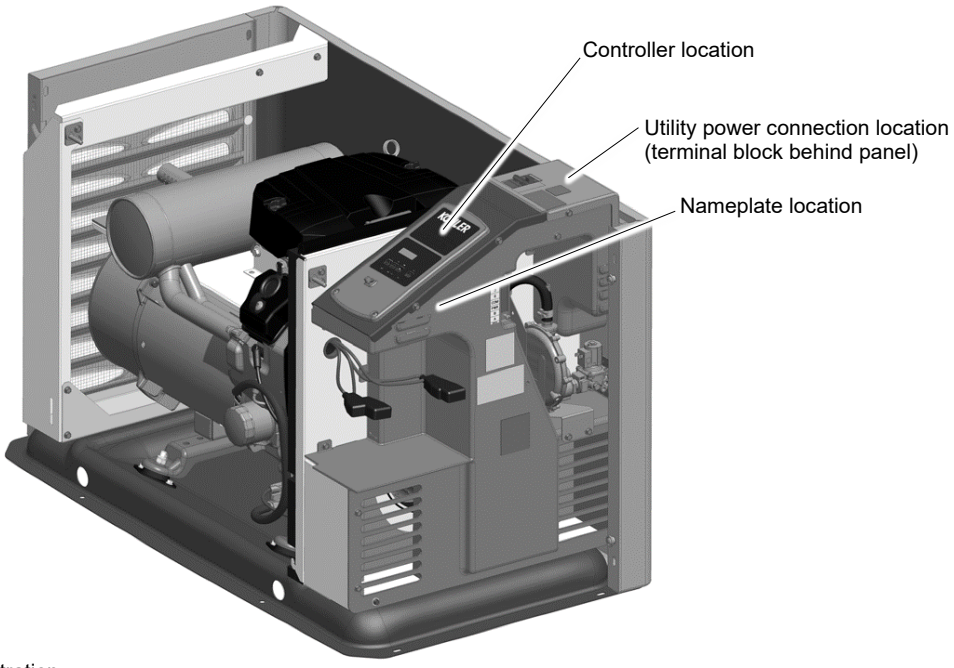

Enclosure panels removed for illustration.

ADV-8928

Figure 32 Controller, Utility Power Connection, and Nameplate Locations

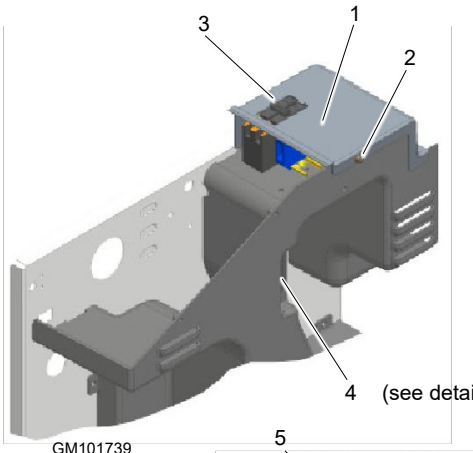

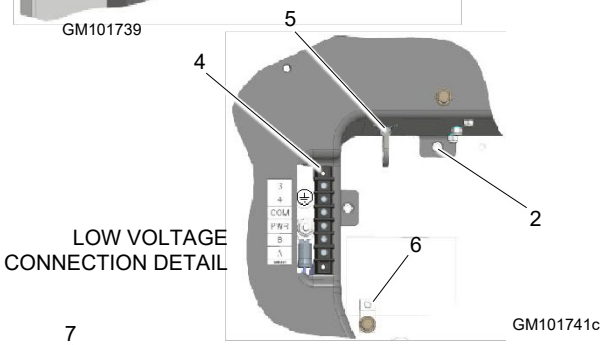

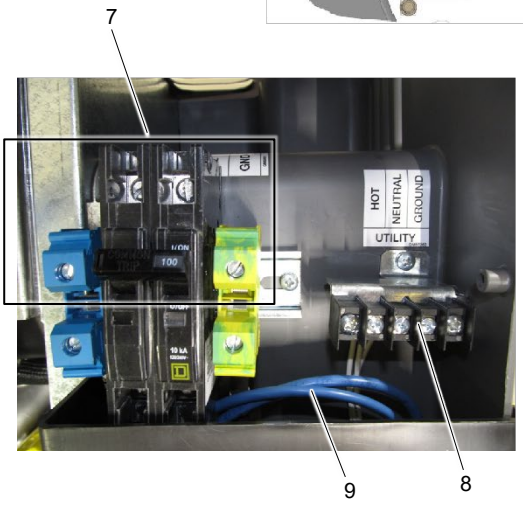

1. Cover panel. Remove for access to utility power and load connections.
2. Cover panel screws, qty. 2
3. Load circuit breaker
4. Transfer switch and accessory low voltage connections
5. Use cable tie to secure low voltage connections
6. Ground connection for communication cable shield
7. Load connections
8. AC power supply connections (for battery charging; connect to load side of transfer switch)
9. Network cable for KOHLER Energy Management

Note:
Circuit breaker will vary for different voltage configurations.

Figure 33 Electrical Connection Detail

4. Disconnect the generator set engine starting battery, negative (-) lead first.
5. Remove the two (2) screws securing the controller to the junction box and *carefully* lift the bottom edge of the controller. See Figure 34.

   Note:
   Be careful of the leads and harness connected to the controller panel.
6. Note the connections on the back of the controller, and then disconnect all harnesses and leads from the controller. See Figure 35 or the wiring diagram.
7. Remove the old controller.

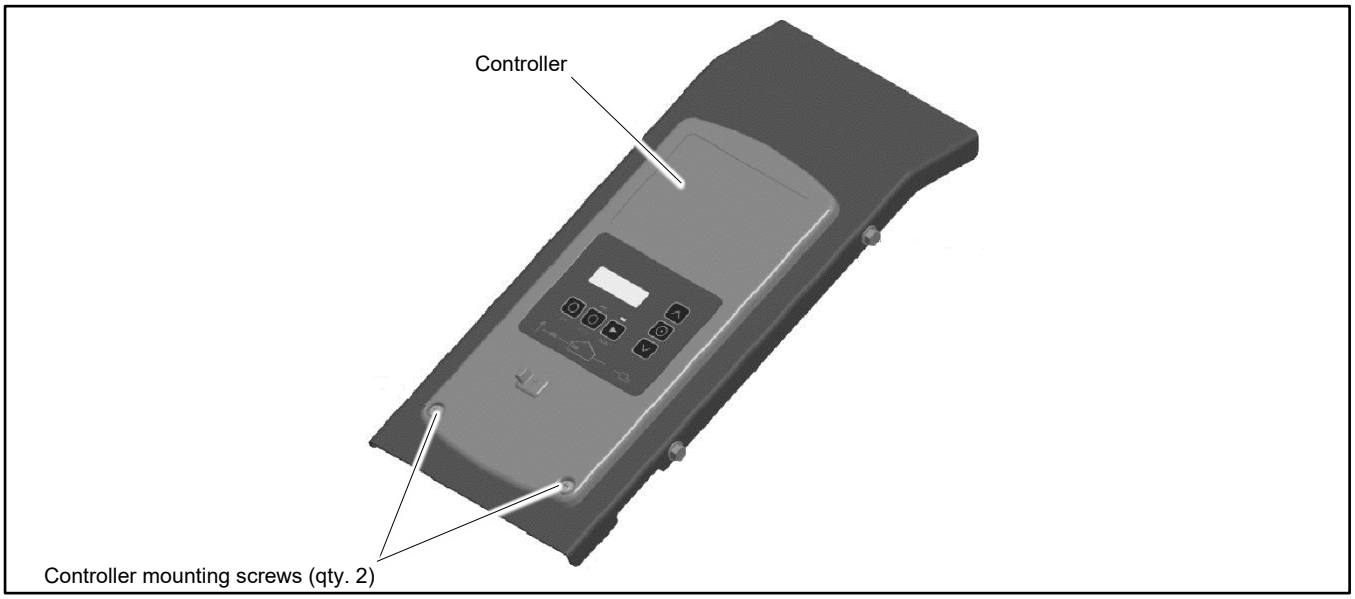

Figure 34 Controller Mounting

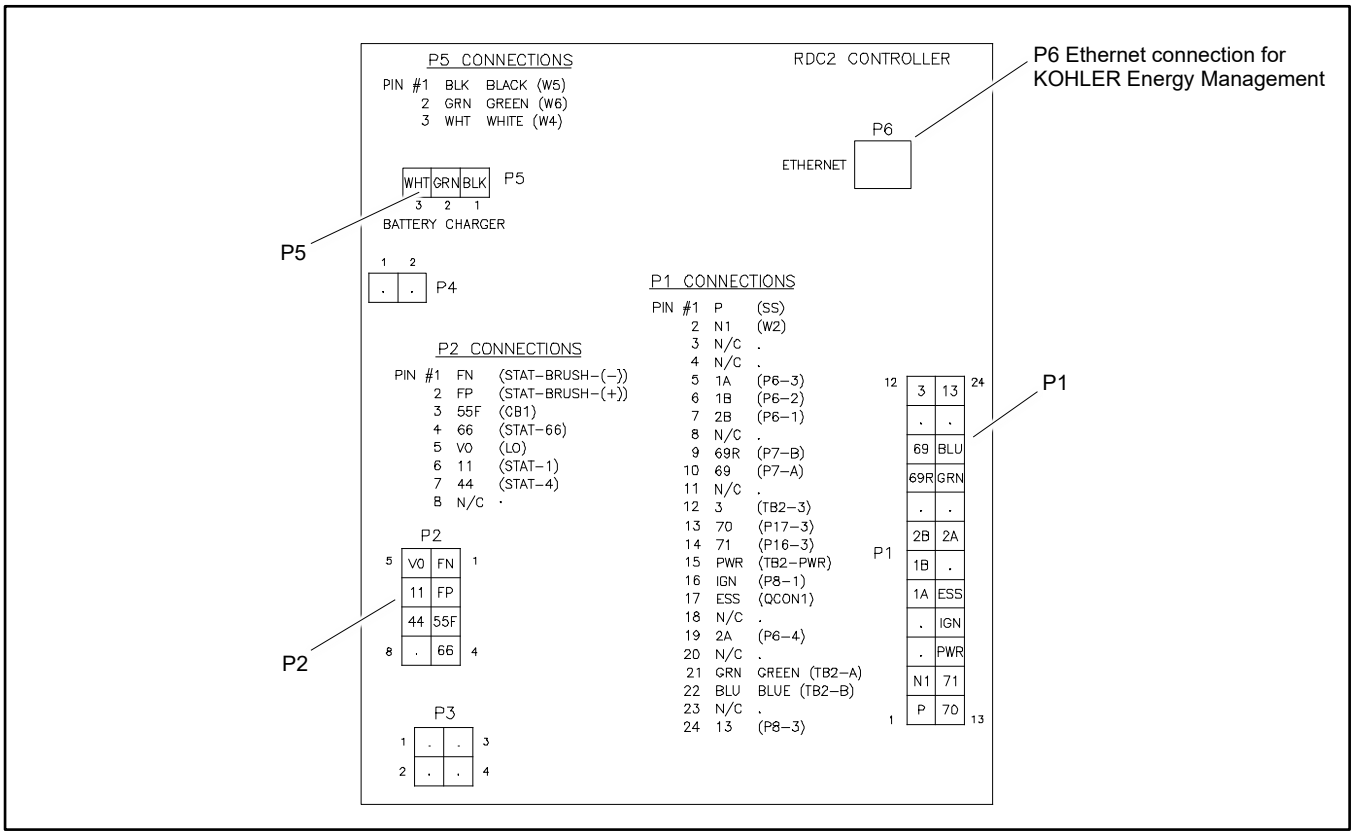

Figure 35 Controller Connections

8. Reconnect all harnesses to the new controller assembly.
9. Install the controller onto the junction box using the two (2) screws removed in step 5.
10. Reconnect the engine starting battery, negative (-) lead last.
11. Reconnect the utility power to the generator set by closing the circuit breaker in the distribution panel.
12. The controller will prompt you to set the date and time, and then to set the exerciser. See the generator set Operation Manual for instructions, if necessary.
13. Check the firmware version on the controller. See the Controller Firmware section. Use SiteTech or the USB utility with a laptop computer connected to the controller's USB port to update the firmware to the latest released version. See the SiteTech Software Operation Manual or the USB Utility instruction sheet for instructions.

    Note:
    When downloading new firmware from the Kohler Power Resource Center, be sure to choose firmware for the RDC2.X controller.
14. Set up the controller as instructed in the Controller Setup section.
15. Calibrate the voltage. See the Voltage Calibration section.
16. If KOHLER Energy Management is used to monitor this generator set, reset the KOHLER Energy Management app password on the controller and note the new password. See the Setting the KOHLER Energy Management Password (pin) section. Then connect with KOHLER Energy Management app and enter the new password (pin).

    Note:
    In the Kohler Energy Management app, "Controller Pin" is the same as the "OnCue password."
17. Verify that KOHLER Energy Management app can communicate with the generator set over the Internet before leaving the job site.

4.6 Controller Setup

Controller setup is required after installation. Follow the instructions in this section to set the necessary parameters.

Controller Setup Notes:

- Some of the required information can be found on the generator set nameplate. See the Controller, Utility Power Connection, and Nameplate Locations figure for the nameplate location.
- SiteTech™ software is required for entering the alphanumeric generator set and controller serial numbers.
- The Fuel Type parameter setting affects the generator set power rating, which is used to determine setpoints for the optional load management device. Setting the Fuel Type is recommended if the generator set is connected to a load management device.
- See Figure 37 for additional information.

Controller Setup Procedure

1. Set the parameters shown in Figure 37.
   a. Use SiteTech™ software and a personal (laptop) computer to enter the alphanumeric generator set and controller serial numbers. The computer connects directly to the controller through the USB port. Refer to TP-6701, SiteTech Software Operation Manual, for instructions if necessary.
   b. Use SiteTech or the RDC2.X controller keypad to enter the other setting listed in Figure 37. Use the buttons on the RDC2.X controller to navigate through the controller menus and change the settings. See the required controller menus in Figure 38. See the generator set operation manual for additional instructions, if necessary.
2. Check the voltage calibration and adjust, if necessary. See the Voltage Calibration section.

Exporting Settings from a File

If a personal computer (laptop) and SiteTech™ software were used to create a controller settings file at the time of generator set installation (when the controller was known to be operating correctly), then SiteTech software can be used to load the saved settings onto the new controller. In some cases, the Kohler Generator Service Department may provide a settings file to load onto the controller for testing or troubleshooting. See TP-6701, SiteTech Software Operation Manual, for instructions to export and import controller settings.

Note:
Load the old controller settings onto the new controller only if you are certain that the settings are correct. Many generator set operation problems can be caused by incorrect settings.

System Voltage	Frequency, Hz	Phases	Phase Connection
120/240	60	1	Single
120/208	60	3	Wye
120/240	60	3	Delta
277/480	60	3	Wye

Figure 36 Voltage Configurations

Parameter	Controller Menu	SiteTech Group	Settings		
			14RCA(L)	20RCA(L)	26RCA(L)
Genset Model Number	Genset Information	Genset Info	14kW	20kW	26kW
Genset Serial Number			From nameplate		
Fuel Type	Genset System	Genset System Configuration	Natural Gas or Liquid Propane (LP)		
Phase Connection			See the nameplate and Figure 36		
Genset System Voltage			From nameplate		
Genset System Frequency			60 Hz		50 or 60 Hz

Figure 37 Controller Setup

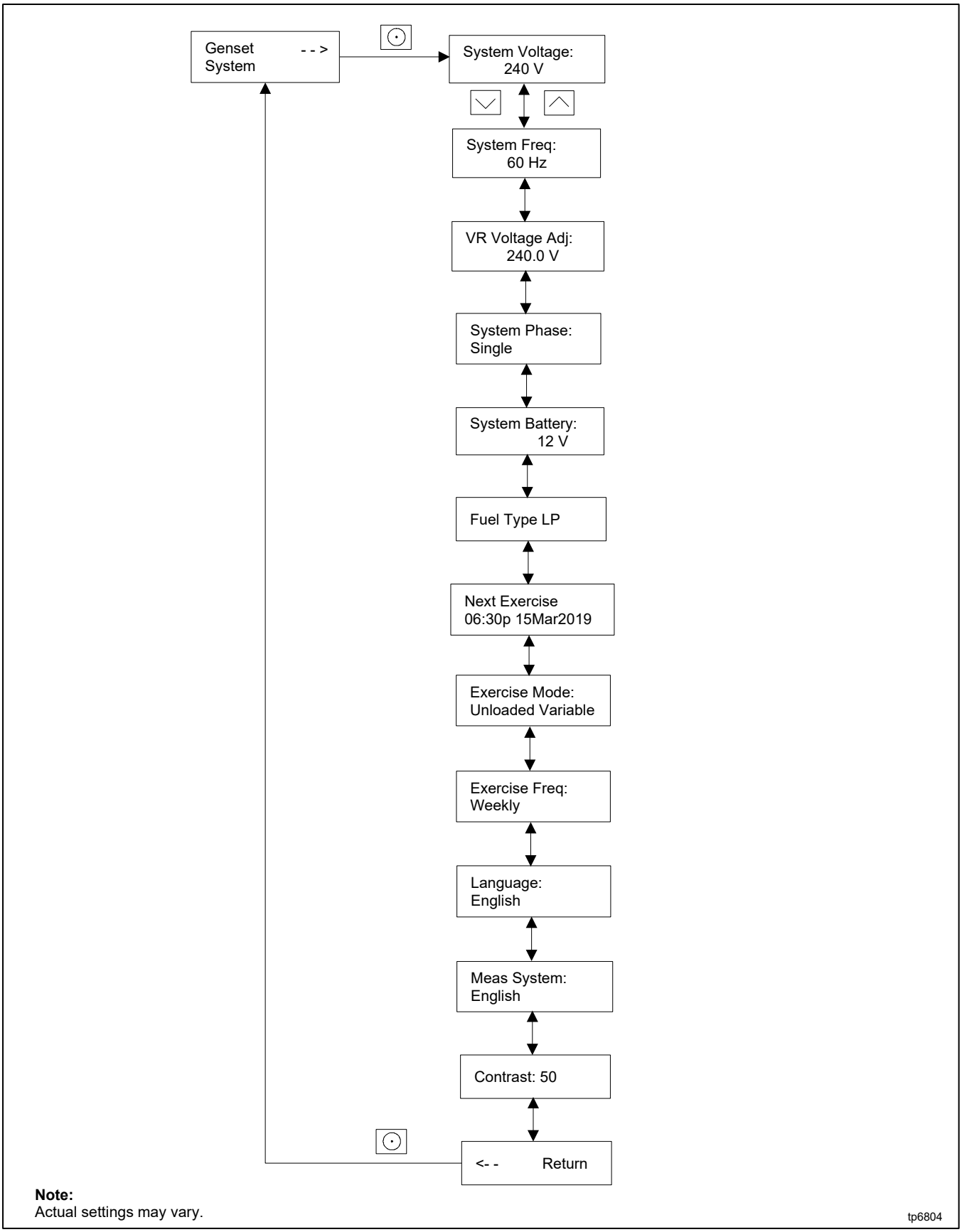

Figure 38 Genset System Menu, RDC2

4.7 Voltage Calibration

DANGER	
	**Hazardous voltage. Moving parts.** **Will cause severe injury or death.** Operate the generator set only when all guards and electrical enclosures are in place.

Testing live electrical circuits. Hazardous voltage or current will cause severe injury or death. Have trained and qualified personnel take diagnostic measurements of live circuits. Use adequately rated test equipment with electrically insulated probes and follow the instructions of the test equipment manufacturer when performing voltage tests. Observe the following precautions when performing voltage tests: (1) Remove all jewelry. (2) Stand on a dry, approved electrically insulated mat. (3) Do not touch the enclosure or components inside the enclosure. (4) Be prepared for the system to operate automatically. *(600 volts and under)*

Short circuits. Hazardous voltage/current will cause severe injury or death. Short circuits can cause bodily injury and/or equipment damage. Do not contact electrical connections with tools or jewelry while making adjustments or repairs. Remove all jewelry before servicing the equipment.

Correct voltage calibration is necessary for proper generator set operation. Check the voltage calibration after controller replacement or generator set reconnection, and adjust if necessary.

The RDC2 controller can be calibrated using the controller keypad and menus, or using a personal computer with SiteTech™ software.

4.7.1 Calibration Using the RDC2 Controller Keypad and Menus

The controller's voltage calibration can be adjusted using the controller keypad. See Figure 39 and follow the procedure below.

Note:
A digital voltmeter is required for these adjustments.

1. With the generator set off, connect a digital multimeter to measure output voltage across L1 and L2. Set the meter to measure AC volts.
2. Start the generator set by pressing the RUN button on the RDC2 controller.
3. On the RDC2 controller, press the Select button and then use the arrow buttons to navigate to the Generator Metering menu on the RDC2 controller.
4. Press the Select button to display Volts L1-L2. Compare the number displayed with the voltmeter reading.
5. If the correct voltage is not displayed, follow these steps to adjust it:
   a. Press the Select button. The voltage will flash.
   b. Press the up or down arrow button to adjust the voltage to match the voltmeter reading.
   c. Press Select to save the voltage setting. The voltage stops flashing.
   d. Wait for the voltmeter reading to stabilize. This may take 30 to 60 seconds.
6. For three-phase models, press the Down arrow button and repeat the calibration procedure for voltage across L2-L3 and L3-L1.
7. Use the arrow buttons to step down to the Return screen. Press Select to exit the Generator Metering menu.
8. Press OFF to stop the generator set.

Reset Calibration

Pressing the select button when "Reset Calibration? Yes" is displayed will discard the changes and reset the calibration to the original settings. See Figure 39.

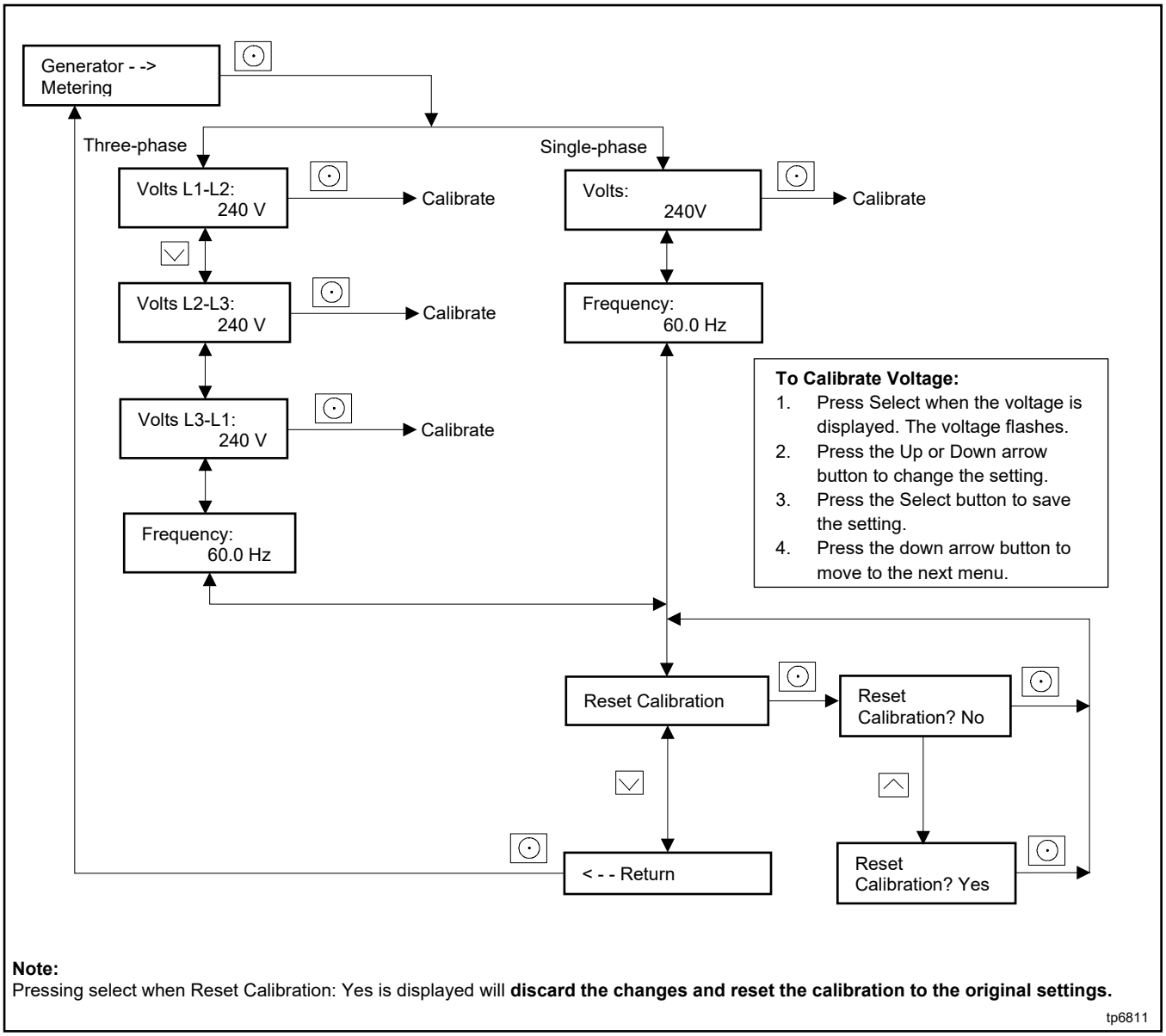

Figure 39 Voltage Calibration

4.7.2 Calibration Using SiteTech

Voltage calibration factors can be adjusted using SiteTech software to calibrate the RDC2 controller. Connect a personal computer (laptop) to the controller using a USB cable and follow this procedure to use SiteTech™ software to calibrate the controller.

The voltage calibration factors are located in the Genset Calibration group in SiteTech™. Find the parameter labelled Genset Calibration Factor Voltage, L1-L2. See Figure 41.

Note:
A digital voltmeter is required for these adjustments.

1. With the generator set off, connect a digital multimeter to measure output voltage across L1 and L2. Set the meter to measure AC volts.
2. Start the generator set by pressing the RUN button on the RDC2 controller.
3. Compare the voltage reading on the digital voltmeter to the voltage displayed by the controller.
4. If the voltage displayed on the controller does not match the measured voltage, use the equation in Figure 40 to calculate a new value for Genset Calibration Factor Voltage, L1-L2.

5. Type the new value for Genset Calibration Factor Voltage, L1-L2 into SiteTech and click on Apply Changes. See Figure 41.
6. Allow a few seconds for the controller to adjust to the new factor and then compare the voltmeter reading with the voltage displayed on the controller.
7. If the voltage readings do not match, check your calculations. Check the calibration factor and both voltage readings again. Repeat the procedure using the new values, if necessary.

   Note:
   To simplify the calculation, set the calibration factor to 1.0000 and then repeat the calibration procedure from step 3.
8. Press OFF to stop the generator set.
9. For three-phase models, repeat the procedure for voltage across L2-L3 and L3-L1.

$$(\mathbf{V}_{meter} \div \mathbf{V}_{control}) \times \mathbf{F}_{old} = \mathbf{F}_{new}$$

$\mathbf{V}_{meter}$ = Voltmeter reading

$\mathbf{V}_{control}$ = Voltage displayed on controller

$\mathbf{F}_{old}$ = Genset Calibration Factor Voltage, L1- L2, from SiteTech before calibration

$\mathbf{F}_{new}$ = New value to enter for Genset Calibration Factor Voltage, L1- L2, in SiteTech

Example:

Voltmeter reading: 241.2

Controller display: 240

Old calibration factor (from SiteTech): 1.0063

New calibration factor:

(241.2 ÷ 240) x 1.0063 = **1.0113**

Figure 40 Voltage Calibration Factor

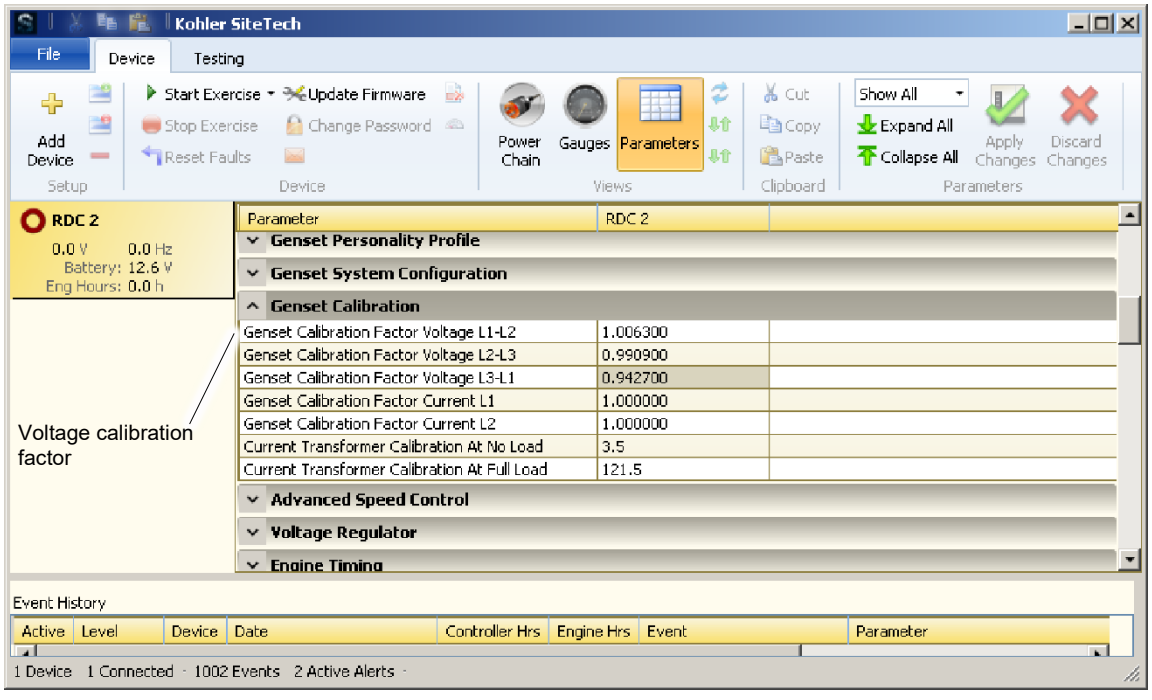

Figure 41 Voltage Calibration Factor in SiteTech™

4.8 Setting KOHLER Energy Management Password (Pin)

If the KOHLER Energy Management System is used to monitor the generator set, reset the KOHLER Energy Management password as described in the following procedure.

Note:
In the KOHLER Energy Management app, “Controller Pin“ is the same as the “OnCue password.”

Refer to Figure 42 during this procedure.

1. Press Select and then press the down arrow button to navigate to the networking Information menu.
2. Press Select. Networking Status is displayed.
3. Press the Down arrow button. Networking Configuration is displayed.
4. Press Select. Reset KOHLER Energy Management Password is displayed.
5. Press and HOLD the Select button until Reset KOHLER Energy Management Password? No appears. The word No will flash.
6. Press the Up arrow button to change the word No to Yes.
7. Press Select to reset the password. The generator set serial number and new password are displayed for 10 seconds. Be sure to write down the new password for entry into KOHLER Energy Management app.

Note:
It is very important to write down the password. The password cannot be viewed again without changing it.

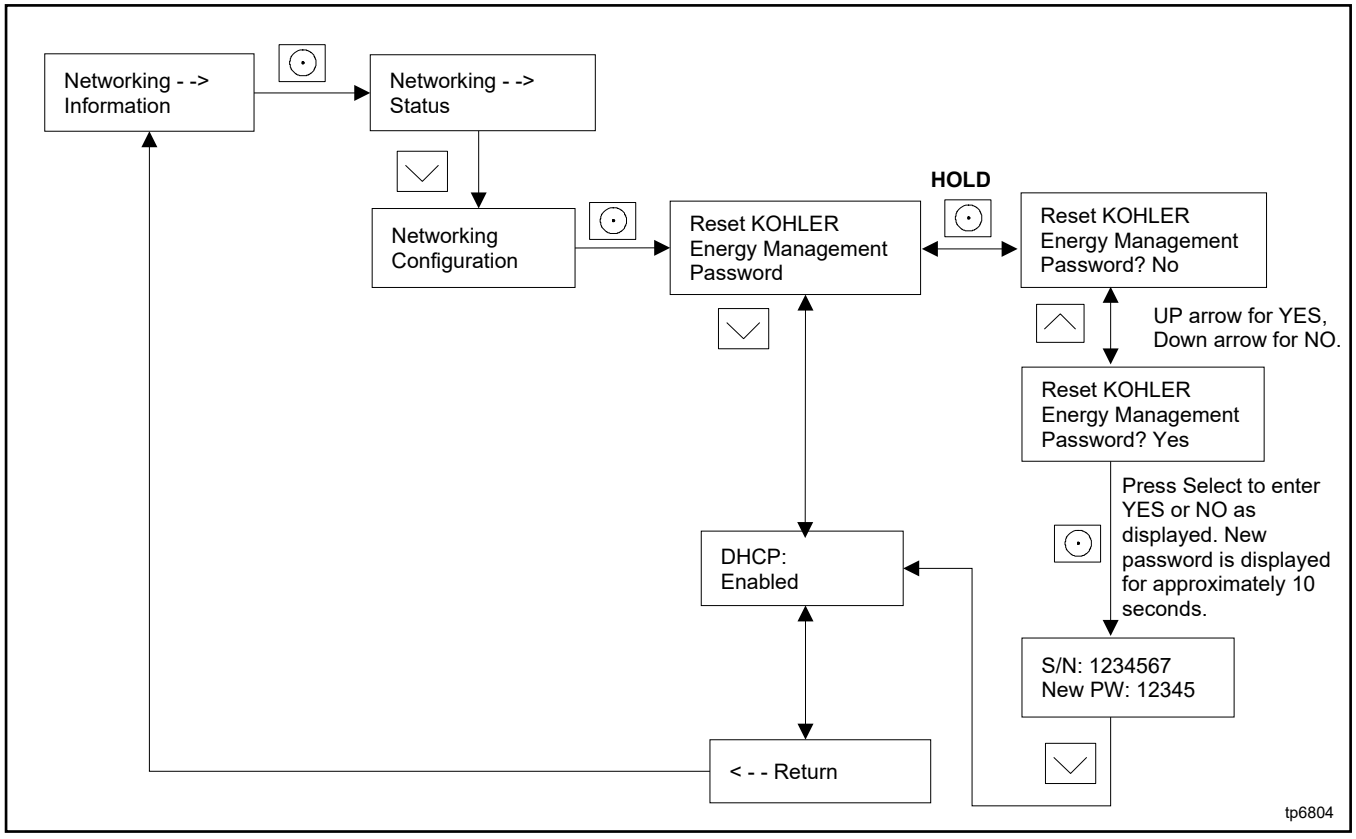

Figure 42 Setting KOHLER Energy Management (pin), RDC2

5.1 Introduction

Corrective action and testing in many cases requires knowledge of electrical systems and electronic circuits. Testing and service must be performed by an authorized dealer or trained service technician.

Refer to the engine service manual for engine service information. See the List of Related Materials for the document part number.

If the troubleshooting procedures in this section identify a failed part, refer to the parts catalog for replacement part numbers. See the List of Related Materials in the Introduction for the parts catalog number.

5.2 Theory of Operation, Electronic Start Sequence

The following steps trace the electronic system as different leads and components are energized during the start sequence. A start signal can come from any of the following:

- Pressing the Run button on the RDC2 controller
- A remote start signal through RBUS (from an RXT transfer switch, for example)
- Closing a contact across engine start connections 3 and 4 (remote start/stop switch or non-RBUS transfer switch engine start signal)
- A start signal over Ethernet from KOHLER Energy Management app

The start signal begins the series of events that adds fuel, ignition, and engine crank to the start sequence. Use the steps below and refer to the wiring schematics in the Wiring Diagrams section to assist with troubleshooting and checking for loose connections or damaged leads.

1. Engine Crank
    a. When the start signal is received, the RDC2 controller energizes FP and lead 71.
    b. FP provides 12VDC to flash the rotor field.
    c. Lead 71 energizes the starter relay.
    d. The starter relay closes the starter relay contact which energizes the start solenoid.
    e. The start solenoid closes and energizes the starter motor, which cranks (turns) the engine.
    f. The engine rotation and field excitation produces alternator voltage.
2. Fuel and Ignition
    a. When the RDC2 controller detects acceptable alternator voltage (leads 11 and 44) or frequency (leads 55 and 66), the RDC2 controller energizes lead 70 and removes the ground to the ignition (plug 1, pin 16).

       If acceptable voltage or frequency is not detected within 3 seconds, the cranking cycle terminates and crank pause begins.
    b. Lead 70 energizes run relay P17 (if equipped), sending 12 VDC to the fuel valve and ignition. Fuel flows to the carburetor and the ignition produces spark.
    c. When the RDC2 controller senses alternator voltage in winding 55 and 66, the RDC2 controller governor circuit sends 12 VDC to the stepper motor through leads 1A, 1B, 2A, and 2B.
    d. The stepper motor actuates the throttle arm on the carburetor, allowing fuel to enter the engine.
    e. When the controller senses that the engine has reached 750 RPM (12.5 Hz), the RDC2 controller will drop power to lead 71, ending the start sequence.
3. If running speed is not reached within 15 seconds, the cranking cycle terminates and a crank pause begins.
4. If the engine does not start successfully after 3 crank cycles, an Overcrank fault occurs.

5.3 Initial Checks

When troubleshooting, always check for simple problems first. Check for the following common problems before replacing parts:

- **Loose connections or damaged wiring.**
- **Dead battery.**
- **Inadequate fuel supply.** Check for damaged primary or secondary fuel regulators, loose connections to the fuel solenoid valve, a damaged or closed fuel shutoff valve, an empty LP fuel tank, or other problems with the fuel supply. Check the fuel supply pressure to the generator set. See the Fuel Systems section.
- **Fault shutdown.** Check for a fault message on the controller display. The Fault Messages section describes the warning and shutdown fault messages. If a fault message is displayed, identify and correct the cause of the fault condition. Then press the OFF button on the controller to clear the fault.
- **Incorrect controller settings.** Always check the controller settings before replacing the controller. See the Controller Parameters Table section for controller settings. Refer to the operation manual for instructions to check and change the controller settings from the controller keypad, or use a personal computer and SiteTech™ software.
- **Emergency Stop Switch or Engine Stop Switch activated.** The generator set may be equipped with an optional emergency stop switch or an engine shutdown switch. Verify that it is safe to start the generator set and apply power to the load before deactivating these switches.

5.4 USB Port and Auxiliary Winding Mini-Breaker

The USB port is located under a small rubber cover on the front of the controller. The alternator winding circuit is located on the left side of the controller compartment as shown in Figure 43.

A personal computer (laptop) with SiteTech™ software can be used to view the event history and adjust controller settings. Use a USB cable with a mini-B connector to connect the controller's USB port to your PC. Some settings can be changed from the controller keypad. All other adjustable settings require a personal computer (laptop) with SiteTech™ software for changes. The Controller Parameters section lists controller settings.

See TP-6701, SiteTech™ Software Operation Manual, for software operation instructions.

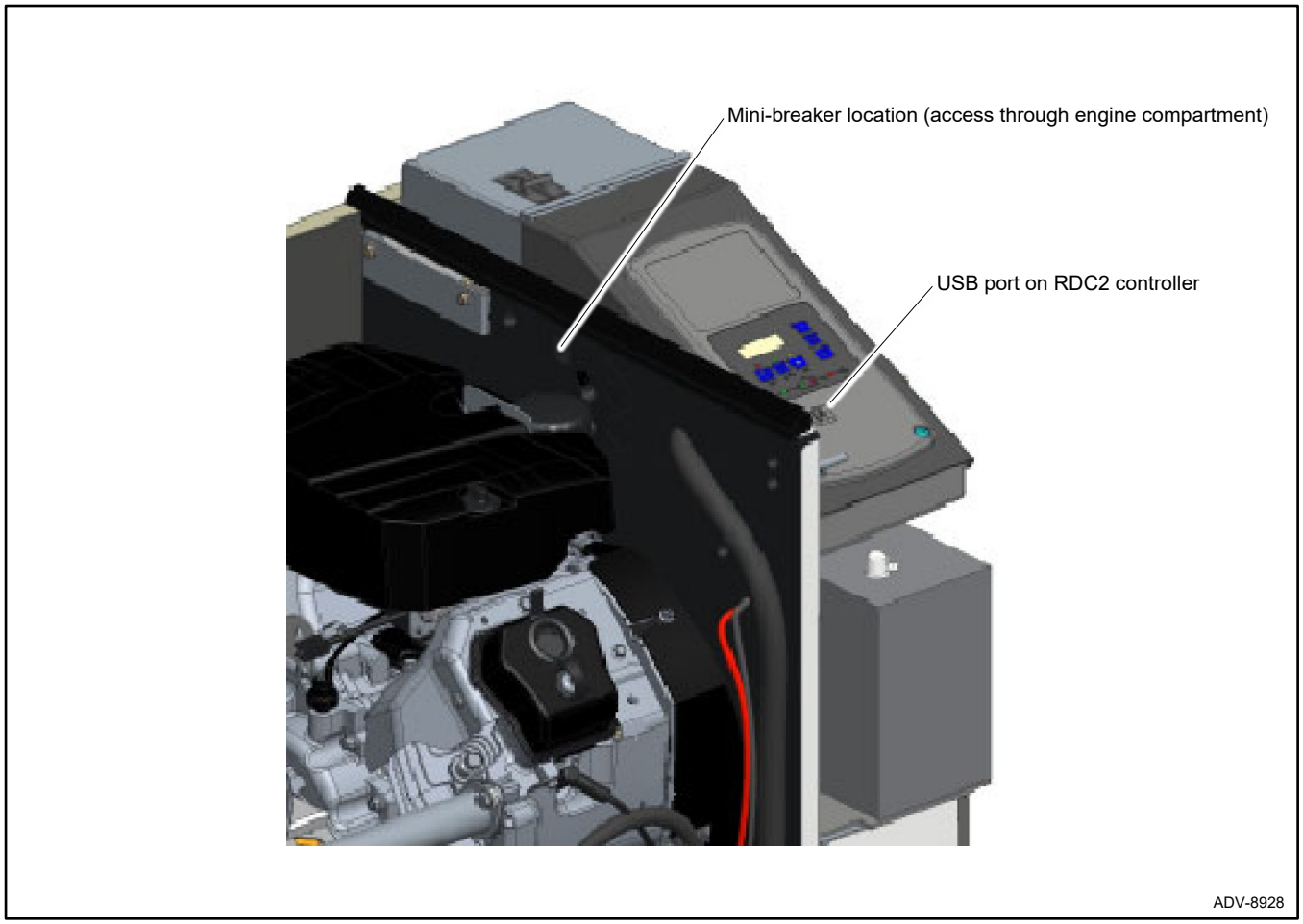

Figure 43 USB Port and Auxiliary Winding Mini-Breaker Locations

5.5 Circuit Protection

Line Circuit Breaker

The line circuit breaker interrupts the generator output in the event of an overload condition or a fault in the wiring between the generator and the load. If the circuit breaker trips, reduce the load and check the wiring.

Auxiliary Winding Circuit Breaker

The mini-breaker in the controller's service area protects the alternators auxiliary winding. See the USB Port and Auxiliary Winding Mini-Breaker Locations figure. If the breaker trips, check connections 55, 66, FP, and FN to the alternator.

Controller Internal Circuit Protection

The controller is equipped with internal circuit protection for accessory and main power overload conditions. Press OFF to reset.

5.6 Emergency Stop Switch

The generator set may be connected to an optional emergency stop switch. See the Emergency Stop Switch (optional) figure. The Emergency Stop Switch may be mounted near the generator set or in a remote location. If the emergency stop button is activated, the controller display will show Emerg Stop Shutdown.

5.6.1 Emergency Stop Switch Operation

Press the red STOP button to shut down the generator set in an emergency.

Using the emergency stop button bypasses the engine cooldown cycle, stopping the engine immediately. The controller emergency stop lamp lights (if equipped) and the unit shuts down. The generator set cannot be restarted until the emergency stop switch(es) is/are reset.

Lockout/Tagout

The emergency stop button can be locked in the STOP position. Insert a lock through two openings in the yellow shroud to prevent the stop button from being pulled out. See Figure 44. Remove the lock for normal operation.

A lock is not required in order to keep the switch activated. The switch button will stay depressed until it is pulled out by the operator.

Resetting the Emergency Stop Switch

To reset the E-stop switch, remove the locking device and pull the button out. Reset the controller by pressing the OFF/RESET button.

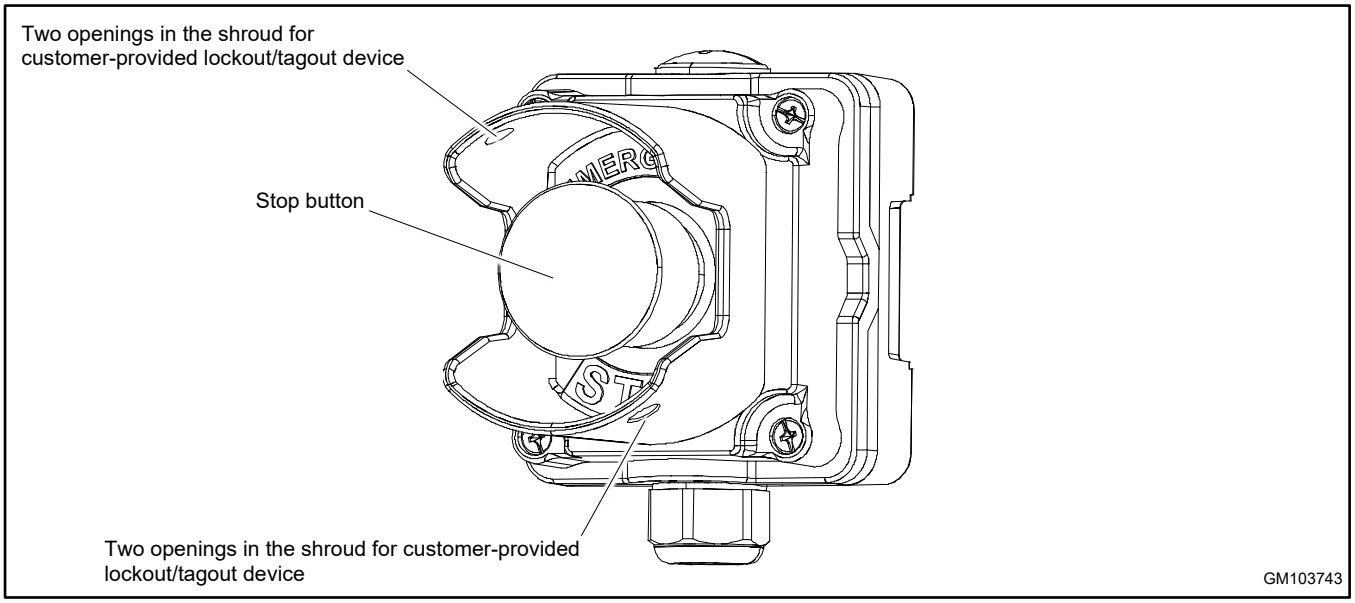

Figure 44 Emergency Stop Switch (optional)

5.6.2 Connections

The emergency stop switch is connected to leads ESS and ESN near connector P1 in the controller harness.

If the controller shows an emergency stop shutdown but the button is not activated, check the ESS and ESN lead connections to the emergency stop button assembly. If there is no emergency stop button, connect ESS and ESN securely together. See Figure 46.

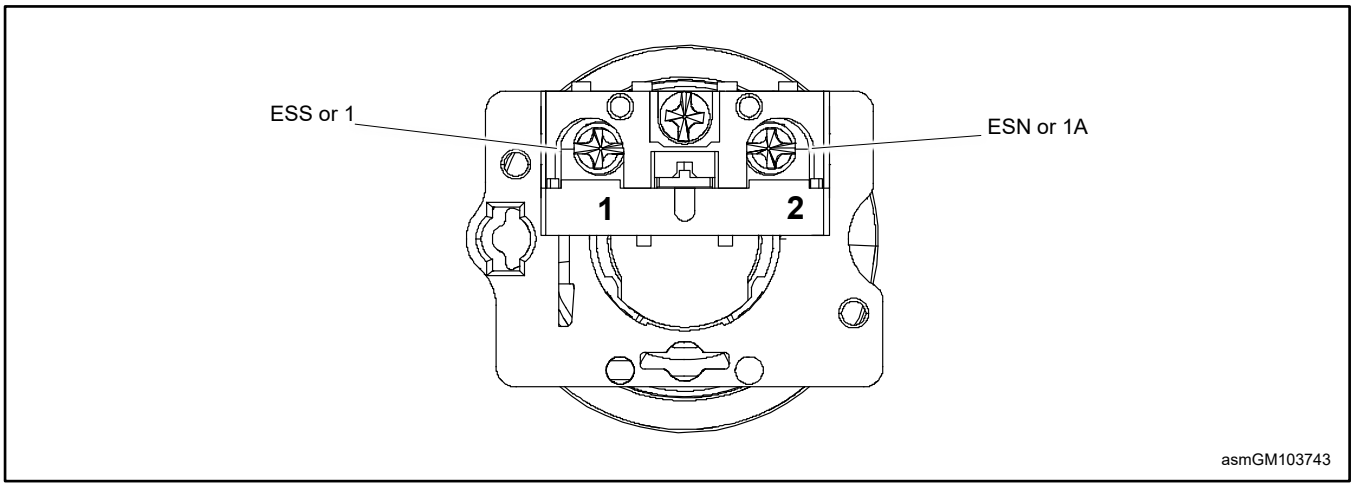

Figure 45 E-Stop Switch Connections 1 and 2

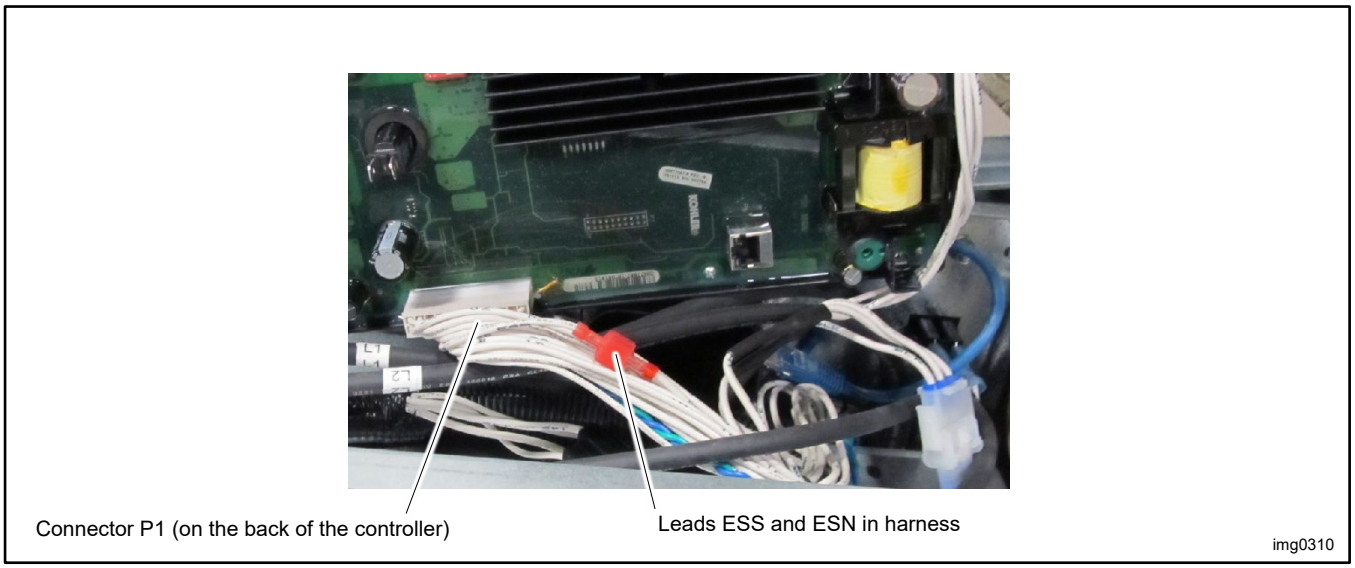

Figure 46 Emergency Stop Leads ESS and ESN

5.7 Shutdown Prime Mover Switch (Engine Stop Switch)

The generator set may be equipped with a Shutdown (Prime Mover) switch. See Figure 47. This switch, also referred to as the Engine Shutdown switch, commands an immediate shutdown and prevents an engine start if the switch is turned to the off (open, O) position. When the shutdown switch is activated, the controller display shows Emerg Stop Shutdown.

The switch is a mechanical, rocker-style switch. Press O to prevent engine start during generator set service. Press I to allow the engine to start and run.

See Figure 48 for switch connections.

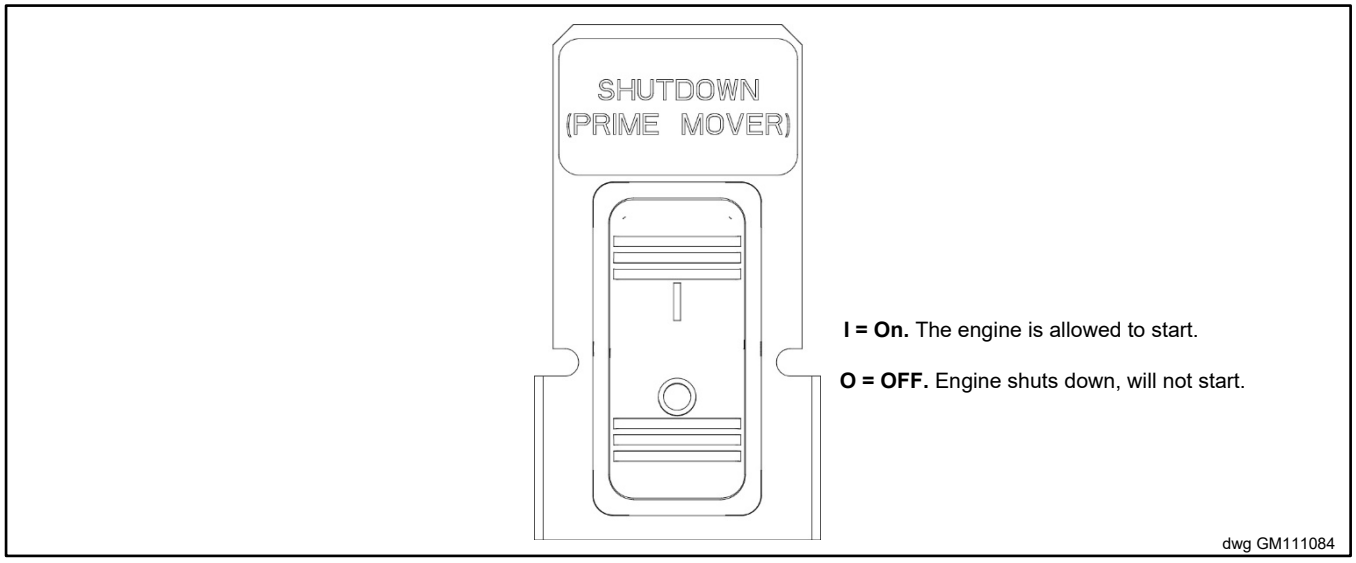

Figure 47 Shutdown Switch

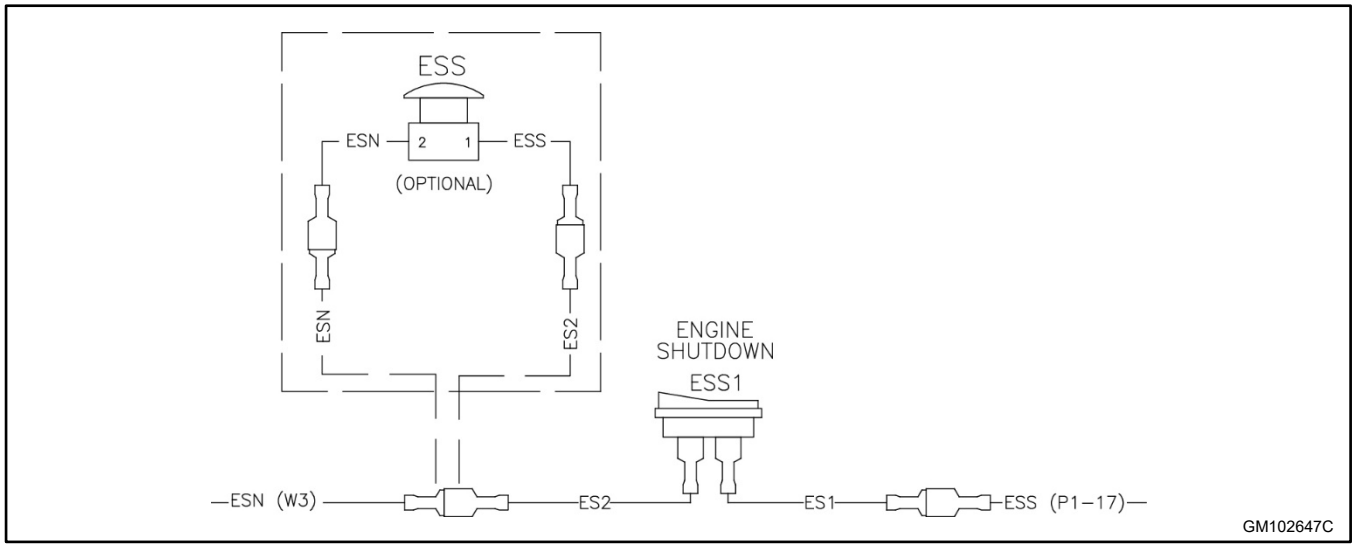

Figure 48 Emergency Stop Switch and Engine Shutdown Switch Connections

5.8 Thermostat

The generator set is equipped with a resettable thermostat located in the air intake area. The thermostat detects excess heat inside the enclosure. If the thermostat trips, the generator will shut down and the controller will display a fault (underspeed, underfrequency, or undervoltage). If the thermostat trips, check for blocked air inlets and exhaust outlets. Then follow the instructions below to reset the thermostat.

Observe the following safety precautions while resetting the thermostat.

DANGER	**Hazardous voltage.** **Will cause severe injury or death.** Disconnect all power sources before opening the enclosure.

WARNING	**Accidental starting.** **Can cause severe injury or death.** Disconnect the battery cables before working on the generator set. Remove the negative (–) lead first when disconnecting the battery. Reconnect the negative (–) lead last when reconnecting the battery.

Disabling the generator set. Accidental starting can cause severe injury or death. Before working on the generator set or equipment connected to the set, disable the generator set as follows: (1) Move the generator set master switch to the OFF position. (2) Disconnect the power to the battery charger. (3) Remove the battery cables, negative (–) lead first. Reconnect the negative (–) lead last when reconnecting the battery. Follow these precautions to prevent starting of the generator set by an automatic transfer switch, remote start/stop switch, or engine start command from a remote computer.

WARNING	**Hot engine and exhaust system.** **Can cause severe injury or death.** Do not work on the generator set until it cools.

Servicing the exhaust system. Hot parts can cause severe injury or death. Do not touch hot engine parts. The engine and exhaust system components become extremely hot during operation.

Procedure to Reset the Thermostat

See Figure 50 for the thermostat location.

1. Disconnect the utility power to the generator accessories by opening (turning OFF) the corresponding circuit breaker at the building's distribution panel.
2. Open the enclosure roof.
3. Remove the air intake panel by pulling it up and off the four enclosure bushings. See Figure 49.
4. See Figure 50 for the thermostat location. Press the button on the thermostat to reset it.
5. Replace the air intake panel.
6. Reconnect utility power to the generator set by closing the circuit breaker in the distribution panel.
7. Press the OFF button on the controller to reset the fault.

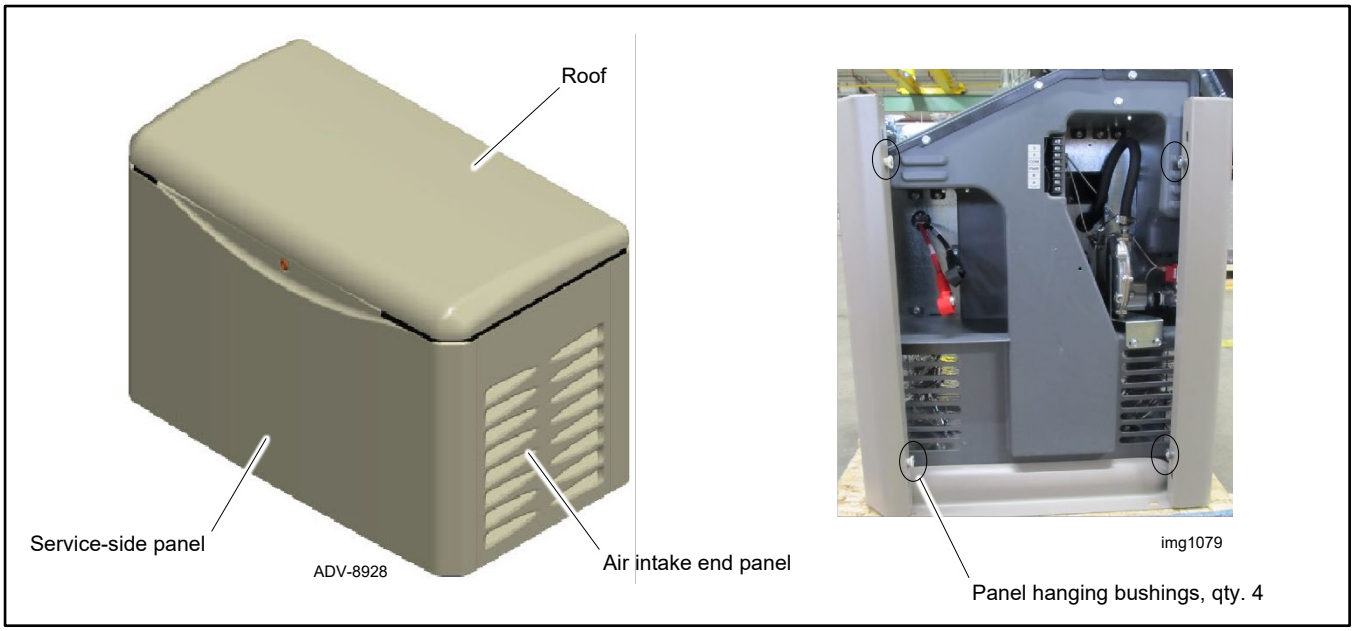

Figure 49 Removing the Air Intake Panel

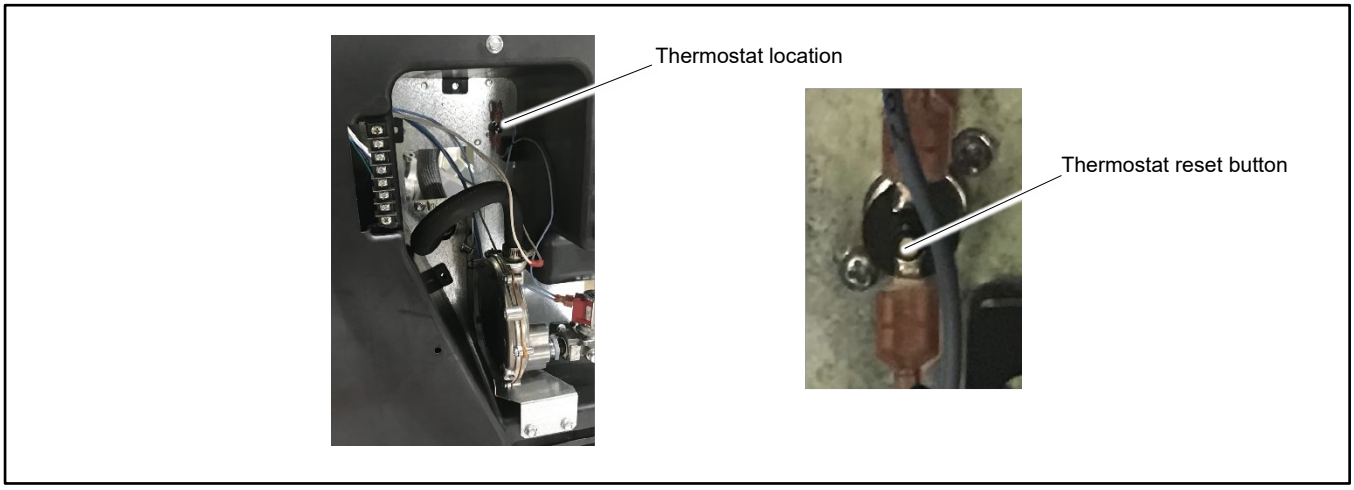

Figure 50 Thermostat Location

5.9 KOHLER Energy Management Troubleshooting

See the KOHLER Energy Management app for troubleshooting instructions for the KOHLER Energy Management System.

5.10 Fuel System Troubleshooting

Most problems with gas fuels involve either fuel pressure or fuel regulator function. Basic troubleshooting consists of verifying fuel pressures and checking each fuel system component.

Check the following items:

- Check primary fuel regulator outlet pressure. This is the line pressure.
- Check the primary regulator vent for obstructions and clean, if necessary.
- Check fuel shutoff inlet pressure.
- Check secondary fuel regulator inlet pressure.
- Perform fuel system maintenance if necessary. See the Fuel System Maintenance section.

5.11 Troubleshooting Engine Hunting, 20RCA(L) Models

DANGER	
	**Hazardous voltage. Moving parts.** **Will cause severe injury or death.** Operate the generator set only when all guards and electrical enclosures are in place.

Engine hunting can be the result of a number of factors. Experience has shown that replacement of the controller or stepper motor is typically **not** effective in solving hunting-related issues.

The following steps outline a troubleshooting sequence to help diagnose and pinpoint the cause of the frequency fluctuation and suggestions for resolving the condition. Perform the steps in the order shown and test the operation after each step. If one step does not solve the hunting, proceed to the next step.

1. To prevent automatic starting, disconnect the ATS by disconnecting PWR and COM (RXT) or engine start leads 3 and 4 (RDT).
2. Confirm the operating conditions that produce generator hunting: no load, loaded, and/or only during exercise.
3. Verify that the RDC2.X controller has the latest version of firmware, and update the controller firmware if necessary. The Kohler Generator Service Department will provide the most current version if it is not yet available on the Kohler Power Resource Center website.

   Note:
   Be sure to use RDC2.X firmware. RDC2 firmware cannot be used on RDC2.X controllers.
4. Use SiteTech to check the Engine Speed Gain Adjustment setting. The default setting is 50 and it normally is not adjusted.
   a. If the setting is not 50, reset to 50 and run the engine again.
   b. If the setting is 50, change the value in downward increments of 5. Note the effect that the change has on the speed of the hunting.
   c. If decreasing the setting is not effective, reset to 50 and increase in increments of 5.
5. Check the air cleaner filter element. Replace the filter element if it is dirty and proceed to the next step.
6. Check the air intake tube that runs from the filter housing to the controller J-box. Is the tube seated properly on the filter housing? Is the grommet completely inserted in the housing?
   a. No? Adjust tubing and grommet as needed.
   b. Yes? Proceed to the next step.
7. Verify that the unit is set up for the proper fuel source. See the generator set Installation Manual for instructions.
   - LPG: Insert orifice and disconnect ignition timing leads.
   - NG: Remove orifice and connect ignition timing leads.
8. Is fuel pressure from the source steady and at acceptable levels during all phases of operation? Verify the minimum and maximum fuel pressures with the spec sheet. Pressure should not vary more than 10% from static pressure when starting and accepting full load.
   a. If the pressure varies more than 10% during operation, check the fuel supply and adjust as needed.
   b. If the pressure is steady, proceed to the next step.
9. Energize the fuel solenoid valve to verify that it is opening and closing properly. You should hear an audible click if the solenoid is operating. Is it operating correctly?
   a. No? Replace the fuel solenoid valve.
   b. Yes? Proceed to next step.
10. Monitor voltage at the fuel solenoid valve to verify that battery voltage is present when running and absent when not running.

11. Are the carburetor or intake bolts loose, allowing movement and excess air to be introduced into the system?
    a. Yes? Reposition the carburetor so that the throttle plate will not touch the carburetor gasket. Apply Loctite® to the bolt threads and tighten as needed.
    b. No? Proceed to the next step.
12. Do the throttle plate, linkage between throttle and stepper motor, and stepper motor itself move freely?
    a. No? Check for restrictions including:
        - Linkage. Go to step 13.
        - Worn bushings. Go to step 14.
    b. Yes? Proceed to step 15.
13. On the linkage, is the bias spring in place, around both bushings and/or connected to the holes the bushings are inserted in?
    a. No? Replace bias spring.
    b. Yes? Try different positions on the throttle linkage plate. If it has no effect, replace bias spring to original position and proceed to the next step.
14. Are the bushings worn, causing excessive movement of the linkage?
    a. Yes? Replace the bushings.
    b. No? Proceed to the next step.
15. While running the unit with no load, unplug the stepper motor harness. Does hunting continue?
    a. Yes? Then it is not a controller or governor issue. We can now narrow it down to these possibilities:
        - Regulator replacement
        - Fuel solenoid replacement
        - Spark plug condition check/replacement
        - Perform a cylinder leak-down test. See the engine service manual for instructions.
        - If none of these procedures remedy the hunting, contact the Kohler Generator Service Department.
    b. No? Controller issue. Update the RDC2.X controller software to the latest version.
16. Reconnect the ATS by connecting PWR and COM (RXT) or engine start leads 3 and 4 (RDT).
17. Verify the generator set operation. See the generator set Operation Manual for instructions.

Note:
If the generator set still hunts after performing these procedures, please contact the Kohler Generator Service Department for assistance.

5.12 Troubleshooting Engine Hunting, 26RCA(L) Models

Kohler has recently received feedback from the field about the general run quality of some 26RCA(L) generator sets at low or no load. Reports of misfiring, stumbling, and instability have been reported on installed units using NG fuel.

The 0.015 in. spark plug gap was implemented at product launch to optimize generator performance at reduced-speed exercise. After more testing, our engineering team saw better stability and performance with the plugs gapped to 0.030 in. There is no impact to emissions or the unit's ability to carry load when gapped to 0.030 in. The new spark plugs with the 0.030 in. gap have been implemented in production, starting with **engine serial number 5323701414**.

The following is the recommended action to help diagnose and pinpoint the cause of the misfiring at low or no load.

18. If you have a 26RCA(L) experiencing misfires at low or no load, check the engine serial number. If the engine serial number is lower than the number shown in the table below, re-gap the current plugs to 0.030 in. Refer to the Scheduled Maintenance section of the generator set Operation Manual for instructions, if necessary.
19. The spark plug gap is shown on the QR code label on the generator set. Replace the label with an updated QR code decal that shows the correct 0.030 in. spark plug gap. Please contact KPS Aftermarket Parts and Service (AMPS) to obtain the updated decal, part number GM118986.
20. For service parts, 62 132 13-S (XC10YC spark plug with 0.015 in. gap) will be superseded to 62 132 04-S (XC10YC spark plug with 0.030 in. gap).

Engine Serial Number (first engine with updated spark plug)	5323701414
Updated Spark Plug Gap	0.030 in.
Updated Spark Plug Service Part Number	62 132 04-S
QR Code Decal Part Number	GM118986

5.13 Fault Messages

The RDC2 controller displays fault messages to aid in troubleshooting. Fault messages, descriptions, and recommended checks are listed in the Fault Messages Displayed on the RDC2 Controller figure, which starts on the next page.

Fault messages will also appear in the Event History in SiteTech. The wording of the message in the Event History may vary slightly from the message shown on the controller display.

Identify and correct the cause of the fault condition. Refer to the troubleshooting charts in the Troubleshooting Chart section for additional recommendations. Then press the OFF button to reset the controller after a fault shutdown.

5.13.1 Main Power Overload Shutdown

The Main Power Overload shutdown can be caused by an overcurrent condition on the DC power supply circuit. Check the crank, run, and flash relay circuits for short circuits. Refer to the wiring diagrams to identify the relay leads. Also see the Start (Crank) and Run Relays section for crank and run relay information.

5.13.2 Battery Low Warnings

The RDC2 controller provides charging voltage to the battery. If Battery Low Warning or Battery CRLow Warning appears, check the battery charging DC output from the controller.

DANGER 	**Hazardous voltage.** **Will cause severe injury or death.** This equipment must be installed and serviced by qualified electrical personnel.

Testing live electrical circuits. Hazardous voltage or current will cause severe injury or death. Have trained and qualified personnel take diagnostic measurements of live circuits. Use adequately rated test equipment with electrically insulated probes and follow the instructions of the test equipment manufacturer when performing voltage tests. Observe the following precautions when performing voltage tests: (1) Remove all jewelry. (2) Stand on a dry, approved electrically insulated mat. (3) Do not touch the enclosure or components inside the enclosure. (4) Be prepared for the system to operate automatically. *(600 volts and under)*

Battery Charging Checks

1. Verify that AC power is connected to the field connection terminal block near the controller. See the Service Views in Section 1 for the terminal block location.
2. Verify that 120VAC is present across P5-1 and P5-3 in the harness.
3. With P5 unplugged from the controller, check DC voltage across P1-1 and P1-2 or at the battery terminals. Then reconnect P5 to the controller and verify that DC power across P1-1 and P1-2 or at the battery terminals starts to increase.
4. Check the battery and replace if necessary.

Fault Message	Action	Description/Comments	Check
AC Sens Loss Shutdown (Loss of AC sensing shutdown)	Shutdown	The controller shut down the generator because there was less than 5% of rated voltage measured on Phase A for 3 seconds, only in AUTO, only after acceptable voltage (> 5% of UV setting) has been detected.	Check for loose wiring and connections. Check all AC leads. Troubleshoot alternator.
AC Sens Loss Warning (Loss of AC sensing warning)	Warning	The controller has measured less than 5% of rated voltage on Phase A for 1 second, 10 seconds after crank disconnect.	Check for loose wiring and connections. Check all AC leads. Troubleshoot alternator.
AccyPwrOver Warning (Accessory Power Overload)	Warning	An overcurrent fault (short circuit) on the accessory controller power output.	Check wiring to RBUS accessories ‡. Troubleshoot the RBUS accessories; refer to the documentation provided with the accessories.
ATS ComError Warning (ATS communication error)	Warning	The controller has lost communication with the RXT ATS that had previously been communicating properly.	Check connection to ATS module.
ATS Fail Xfr Warning (ATS fail to transfer)	Warning	The RXT ATS has reported a fail to transfer, the digital output for ATS Fail To Transfer (PIM) is active (contacts closed).	Consult ATS manual for troubleshooting.
ATS PhaseRot Warning	Warning	The RXT ATS has reported a phase rotation mismatch (3-phase only) and the ATS will not transfer.	Check wiring to the ATS. Consult ATS manual for troubleshooting.
Aux Input Shutdwn* (Auxiliary input shutdown)	Shutdown	The controller shut down the generator because the digital input for a custom shutdown (AuxiliaryInputShutdown-PIM) was activated (low).	Check customer equipment connected to the PIM module.
Aux Input Warning * (Auxiliary input warning)	Warning	The digital input for a custom warning (AuxiliaryInputWarning-PIM) is active (low).	Check customer equipment connected to the PIM module.
Batt Chg Flt Warning * (Battery charger fault warning)	Warning	The digital input for Battery Charger Fault Warning (PIM) is active (low). For an external battery charger only, not applicable to the RDC2 built-in battery charging.	Check customer equipment connected to the PIM module.
Battery High Warning	Warning	The controller has measured battery voltage that is above the high warning setting for 10 seconds or more. Operates during exercise and normal operation.	Check engine starting battery.
Battery CRLow Warning †	Warning	Battery voltage dropped to 11 VDC or less for 30 seconds or more.	Check engine starting battery. Check battery charger DC output voltage from RDC2. See the Battery Low Warnings section.
Battery Low Warning †	Warning	The controller has measured battery voltage that is below the low warning setting for 90 seconds or more. The battery voltage is checked before allowing an exercise to start.	Check engine starting battery. Check battery charger DC output voltage from RDC2. See the Battery Low Warnings section.
Chk DateTime Warning (Check date and time warning)	Warning	DC power to the controller has been interrupted and the date and time may not be correct. Event history may not have accurate time/date stamps.	Verify the time and date settings to ensure proper operation of scheduled operations and for event history logging.
Default Pars Warning (Default Parameters)	Warning	The controller has been loaded with default parameters.	Configure settings as required for desired operation.
Emerg Stop Shutdwn	Shutdown	The optional emergency stop button has been pressed or emergency stop leads ESS and/or ESN are not connected.	Reset the emergency stop button and clear the fault as described in the Emergency Stop Button section. Check lead ESS and ESN connections to the emergency stop button. If there is no E-stop button, connect ESS and ESN together.

* Programmable Interface Module (PIM) required.

† Applies during exercise runs and normal operation.

‡ RBUS devices include the APM, PIM, LCM, load shed kit, RXT transfer switch, and the RXT combined interface board.

Fault Message	Action	Description/Comments	Check
Engine M/N Invalid Shutdwn	Shutdown	Generator model number has not been entered. (Engine model number is selected automatically based on generator set model.)	Enter the generator set model number from the RDC2 keypad, or use SiteTech to select the genset model number.
Engine Speed High Shutdwn	Shutdown	The controller shut down the generator because engine speed, as calculated from AC frequency, was above the high speed setting for 0.3 seconds or more.	Troubleshoot engine operation per the engine service manual.
Engine Speed Low Shutdwn	Shutdown	The controller shut down the generator, after crank disconnect, because engine speed, as calculated from AC frequency, was below the low speed setting for 3 seconds or more. The enclosure thermostat has tripped.	Troubleshoot engine operation per the engine service manual. Check for evidence of high temperatures inside the enclosure. Reset the thermostat. See the Thermostat section.
Exer Not Sch Warning	Warning	There is no exercise scheduled.	Set the exercise schedule.
Frequency High Shutdwn	Shutdown	The controller shut down the generator because the frequency measured on Phase A exceeded the high frequency setting for 10 seconds, 10 seconds or more after crank disconnect.	Troubleshoot engine operation per the engine service manual.
Frequency Low Shutdwn †	Shutdown	The controller shut down the generator because the frequency measured on Phase A was less than the low limit for 10 seconds or the measured frequency was 10 Hz or more less than rated for 60 seconds or more, 10 seconds or more after crank disconnect. The enclosure thermostat has tripped.	Troubleshoot engine operation per the engine service manual. Check for evidence of high temperatures inside the enclosure. Reset the thermostat. See the Thermostat section.
Fuel Leak Shutdwn *	Shutdown	The controller shut down the generator because the digital input for Fuel Tank Leak Shutdown (PIM) was activated (low).	Check customer equipment connected to the PIM module.
Fuel Leak Warning *	Warning	The digital input for Fuel Tank Leak Warning (PIM) is active (low).	Check customer equipment connected to the PIM module.
Fuel Level CrHi Warning *	Warning	The digital input for Critically High Fuel Level Warning (PIM) is active (low).	Check customer equipment connected to the PIM module.
Fuel Level High Warning *	Warning	The digital input for High Engine Fuel Level Warning (PIM) is active (low).	
Fuel Level Low Shutdwn *	Shutdown	The controller shut down the generator because the digital input for Low Fuel Level Shutdown (PIM) was activated (low).	Check customer equipment connected to the PIM module.
Fuel Level Low Warning *	Warning	The digital input for Low Fuel Level Warning (PIM) is active (low).	
GenBrkerOpen Warning (Generator Circuit Breaker Open)	Warning	There is voltage at the generator set but no voltage measured on the emergency side of the ATS (Model RXT transfer switch required).	Check line circuit breaker. Check for and correct short circuits or overloading on the load side before resetting the circuit breaker.
Ground Fault Warning *	Warning	The digital input for Ground Fault Warning (PIM) is active (low).	Check customer equipment connected to the PIM module.
High Lube Oil Temperature	Warning	Oil temperature higher than 300°F (149°C).	See Overheats in the Troubleshooting Charts section.
High Lube Oil Temperature	Shutdown	Oil temperature higher than 325°F (163°C).	
Lo Crank Vlt Warning	Warning	During cranking, the controller measured battery voltage less than 60% (7.2V or 14.4V) for 6 seconds or more during cranking.	Check cranking battery.

* Programmable Interface Module (PIM) required.

† Applies during exercise runs and normal operation.

‡ RBUS devices include the APM, PIM, LCM, load shed kit, RXT transfer switch, and the RXT combined interface board.

Fault Message	Action	Description/Comments	Check
Locked Rotor Shutdwn	Shutdown	The controller shut down the generator because no rotation of the engine or alternator was detected, for 3 seconds or more, during cranking.	Check cranking circuit. Troubleshoot the engine. See Engine Service Manuals. Check alternator connections to controller and auxiliary winding circuit breaker. Troubleshoot the alternator.
MainPwrOverL Shutdwn	Shutdown	The internal current limit circuit has tripped, indicating an overcurrent condition on the DC power supply circuit.	Check crank, run, and flash relay circuits for short circuits. See the Main Power Overload Shutdown section.
Maint Req'd Warning	Warning	Engine run time, or calendar days, has exceeded the maintenance reminder setting.	Change the oil and perform other maintenance according to the service schedule section and in the engine manuals. Reset the maintenance timer after service. See the Resetting the Maintenance Reminder section.
Not In Auto Warning	Warning	The RDC2 controller is not in AUTO. The generator will not start from an ATS or remote device. The digital output for Not In Auto (PIM) is active (contacts closed).	Press the Auto button to ensure automatic system operation.
OB1 CommLoss (RBUS device‡)	Warning	Communication with option board #1 has been lost.	Check RBUS wiring to inoperative option board.
OB2 CommLoss (RBUS device‡)	Warning	Communication with option board #2 has been lost.	Check RBUS wiring to inoperative option board.
OB3 CommLoss (RBUS device‡)	Warning	Communication with option board #3 has been lost.	Check RBUS wiring to inoperative option board.
OB4 CommLoss (RBUS device‡)	Warning	Communication with option board #4 has been lost.	Check RBUS wiring to inoperative option board.
Low Oil Pressure or Level Shutdwn *	Shutdown	The controller shut down the generator because the digital input for Low Oil Level Shutdown (PIM) was activated (low).	Check customer equipment connected to the PIM module.
Low Oil Pressure or Level Warning *	Warning	The digital input for Low Oil Level Warning (PIM) is active (low).	Check customer equipment connected to the PIM module.
Oil Pressure Low Shutdwn	Shutdown	The low oil pressure switch was closed for 5 seconds or more, indicating low oil pressure. Function is inhibited until 30 seconds after crank disconnect.	Check for oil leaks. Check the oil level and add oil if low. Check the oil pressure sensor; see Engine Service Manuals.
Oil Pressure OpenCR Warning	Warning	Oil pressure switch closure has not been detected after shutdown.	Check the oil pressure switch connection. Test the LOP switch as described in the Fault Shutdown Switches section.
Over Crank Shutdwn	Shutdown	If noted on the first engine crank cycle, an alternator issue may be indicated. The engine did not start during the crank cycle. Time delay is 15 seconds.	Check the alternator; see the Component Testing and Adjustment section for alternator test procedures. Check fuel supply. Check cranking circuit. Check cranking battery. Troubleshoot engine; see Engine Service Manuals.
RBUS ComError Warning	Warning	The controller has lost communication with an RBUS device that had previously been communicating properly. ‡	Check connection to the RBUS device. ‡

* Programmable Interface Module (PIM) required.

† Applies during exercise runs and normal operation.

‡ RBUS devices include the APM, PIM, LCM, load shed kit, RXT transfer switch, and the RXT combined interface board.

Fault Message	Action	Description/Comments	Check
Spd Sens Flt Shutdwn (Speed sensor fault)	Shutdown	The controller shut down the generator because the speed signal was lost.	Check leads 55, 66, F+, and F - between the alternator and the controller. This fault also occurs if the engine stalls; check the engine and see the troubleshooting chart section.
Volts L1-L2 (AB) High Shutdwn †	Shutdown	The controller shut down the generator because the voltage measured from Phase A to Phase B exceeded the high limit for a time greater than the delay setting 2 seconds.	Troubleshoot alternator. See the Troubleshooting Charts section, and the Component Testing and Adjustment section.
Volts L1-L2 (AB) Low Shutdwn †	Shutdown	The controller shut down the generator because the voltage measured from Phase A to Phase B was greater 5% of rated, but less than the low voltage setting for a time greater than the delay setting 10 seconds. The enclosure thermostat has tripped.	Troubleshoot alternator. See the Troubleshooting Charts section and the Component Testing and Adjustment section. Check for evidence of high temperatures inside the enclosure. Reset the thermostat. See the Thermostat section.

* Programmable Interface Module (PIM) required.
† Applies during exercise runs and normal operation.
‡ RBUS devices include the APM, PIM, LCM, load shed kit, RXT transfer switch, and the RXT combined interface board.

Figure 51 Fault Messages Displayed on the RDC2 Controller

5.13.3 Faults Related to Paralleling

If the PowerSync® Automatic Paralleling Module (APM) is used with two 14RCA(L) or two 20RCA(L) generator sets, additional faults and events related to the paralleling system may be displayed on the controller and/or in KOHLER Energy Management app. This section lists those faults and events in Figure 52 and Figure 53. See the installation instructions provided with the APM for additional paralleling information.

Fault Text	Description	When Active	Warning Delay, sec.	Display Cleared On
Current A High Warning	Over Current	Paralleled	10	Press AUTO or OFF *
Frequency High Warning	Over Frequency	Paralleled	10	Press AUTO or OFF *
Frequency Low Warning	Under Frequency	Paralleled	10	Press AUTO or OFF *
Reactive Power Low Warning	Loss of Field	Paralleled	10	Press AUTO or OFF *
Real Power High Warning	Over Power	Paralleled	10	Press AUTO or OFF *
Real Power Low Warning	Reverse Power	Paralleled	10	Press AUTO or OFF *
Voltage L1-L2 High Warning	Over Voltage	Paralleled	10	Press AUTO or OFF *
Voltage L1-L2 Low Warning	Under Voltage	Paralleled	10	Press AUTO or OFF *

∗ Pressing OFF will stop the generator set.

Figure 52 Warning Messages (protective relay disconnect)

Fault Text	Description	Possible Causes *
BusDeadLive	The bus is measured to be dead when one of the generators is supposed to be supplying voltage to the bus (closed contactor).	Bus metering V9A and V9B connections to V9 of paralleling protection harness are connected incorrectly.
BusLiveDead	The bus is measured to be live when no generators are connected to it (both contactors open).	Bus metering V9A and V9B connections to V9 of paralleling protection harness connected incorrectly.
CfgModelNum	The two generators that are intended to be paralleled have incompatible model numbers.	Incorrect configuration of one of the generators. Different generator types. The paralleled generator sets must be the same kW model. (i.e. two 14RCA(L) or two 20RCA(L).
CfgSysVolt	The system voltage of the two generators intended to be paralleled is not the same. Because the system does not know which voltage is correct, the generators will not be allowed to start.	One of the two generators is incorrectly configured. Intermittent connections on RBUS network wiring.
ChkngMeter	This generator has paralleled to the other generator and is verifying that the metering is connected and establishing the connection direction.	Status message appears the first time the two generators are paralleled.

Fault Text	Description	Possible Causes *
ConCheckFail	Failure to Auto-Discover APM connections.	Wires 9A and 9B crossed between the generators. Wires 9A or 9B not connected.
ConChecking	Performing APM connection auto-discovery.	This generator has started in RUN, the other generator is in OFF.
ConNotDeterm	APM connection auto-discovery is not complete. This means that the generator does not know which contactor is connected to it.	Generators not yet started in RUN with other generator in OFF. See the APM instruction sheet for instructions to perform the auto-discovery procedure.
ContactorOk	Successful auto-discovery of APM connections.	Auto-discovery was activated by placing other generator in OFF and this generator in RUN.
ErraticSig	The power metering on this controller gives a signal that is not consistent with the system configuration. Reversing the power direction does not resolve the problem.	Bad wiring to the CT. Too much tension on wires from the CT to the controller.
LossOfComAPM	The Automatic Paralleling Module has stopped communicating on RBUS. (An APM was detected on the RBUS network but is no longer communicating).	APM is unplugged. Primary controller is powered down. Check the battery connections. See previous page for more information. Intermittent connections on RBUS network wiring. Check RBUS communication connections.
LossOfComm2	The primary controller has lost communication with the secondary controller. (A secondary controller was detected, then communication was lost.)	RBUS disconnected, secondary controller battery disconnected, updating firmware in secondary controller, or intermittent RBUS connections.
LossOfField	This generator has absorbed more than 25% reactive power (magnetic excitation current) for 20 seconds.	Generator voltage on this generator is not calibrated correctly. Generator voltage on other generator is not calibrated correctly. Bus voltage on this generator is not calibrated correctly. Bus voltage on the other generator is not calibrated correctly.
MeteringOk	The generator has verified that the metering is connected correctly and that the direction is consistent with expected power direction.	Status message indicates that the CT is connected to the generator correctly.
MeterUnknown	This generator does not know if the metering is connected or the orientation of the connection. This means that the generators can't share load accurately until this information is known.	System commissioning and startup not yet complete. See the APM instructions.
NoCurrent	The generator has applied load (using the other generator) and has observed no current on the power sensing inputs.	The CT is not connected to the controller. The output leads from the generator do not go through the CT in the correct direction. See the APM instructions.
SyncFailure	The generator has been attempting to synchronize for over 2 minutes without success.	Generator is hunting. Advanced speed control settings need adjustment. Load is changing frequently to disturb the online generator.
* For paralleling system troubleshooting and service, contact an authorized dealer.		

Figure 53 Events Related to Paralleling

5.14 Status Messages

cThe messages shown in Figure 54 and Figure 55 are displayed to show system status. Notices are displayed in the Event History in SiteTech when active but do not appear on the controller display. Some status messages are displayed when a digital input is activated; the optional Programmable Interface Module (PIM) is required for display of those messages as noted in the table.

Most status messages indicate normal system operation and do not require action unless the generator is not operating correctly.

Status Message	Action	Description/Comments	Check
Always Off *	Notice	KOHLER Energy Management app has been used to control this PIM digital output. The digital output is no longer controlled by the generator set.	Click on the PIM output in KOHLER Energy Management app to turn the output on or off. To reset the PIM digital output to a function controlled by the generator set, use SiteTech software to re-assign the output event.
Always On *	Notice	Applies to digital outputs B3 through B6 on the PIM only.	
Auto Locked * (Chicago Code Active)	Notice	The digital output for Chicago Code Active (PIM) is active (contacts closed), indicating the digital input for Chicago Code Active (PIM) is active (low) and thus master switch is locked in the AUTO position.	Check customer equipment connected to the PIM module.
Common Fault	Notice	The digital output for Common Fault (PIM) is active (contacts closed), indicating the generator is shutdown for any (all) fault.	Check for faults and troubleshoot any/all fault conditions individually.
Common Warng	Notice	The digital output for Common Warning (PIM) is active (contacts closed), indicating that any (all) warning is active.	Check for warnings and troubleshoot any/all warning conditions individually.
Emerg Pwr On (Emergency Power System Supplying Load)	Notice	The digital output for EPS Supplying Load (PIM) is active (contacts closed), indicating there is current output (>5%) from the alternator, only if CTs are installed.	—
Eng Cooldown	Notice	The digital output for Engine Cooldown Active (PIM) is active (contacts closed), indicating the generator is running in cooldown. (Delay 5 min.)	Check remote start circuit if it was expected that the generator should be running. Consult ATS operations manual.
Fuel Spill *	Notice	The digital output for Fuel Spill (PIM) is active (contacts closed), indicating any of the digital inputs for Fuel Tank Leak Warning, Fuel Tank Leak Shutdown, Engine Fuel Level Warning or Engine Fuel Level Critically High (PIM) is active (low).	Check customer equipment that is connected to the Fuel Tank Leak Warning, Fuel Tank Leak Shutdown, Engine Fuel Level Warning or Engine Fuel Level Critically High input on the PIM.
Gen Running	Notice	The digital output for Generator Running (PIM) is active (contacts closed), indicating the generator is running.	Check controller front panel buttons for potential RUN command. If in AUTO, check remote start lines. Consult ATS operation manual for events that may cause the generator to start.
Low Fuel *	Notice	The digital output for Low Fuel (PIM) is active (contacts closed), indicating any of the digital inputs for Low Fuel Pressure Warning, Low Fuel Level Warning or Low Fuel Level Shutdown (PIM) is active (low).	Check customer equipment connected to the PIM module.
Minor Fault	Notice	The digital output for Minor Fault (PIM) is active (contacts closed), indicating either the digital input for Ground Fault Indicator Warning (PIM) is active (low) or the controller detected Low Cranking Voltage.	Check customer equipment connected to the PIM module. Check cranking battery condition.
NormSrcUnavl (RXT required)	Notice	The normal power source (source1) is disconnected, unavailable or unacceptable.	Check for utility source power outage. Check wiring and connections to the ATS.
OB1 CommLoss (option board)	Notice	Communication with option board #1 has been lost.	Check RBUS wiring to inoperative option board. (PIM, RXT, or load mgmnt device) ‡

* Programmable Interface Module (PIM) required.
‡ A load management device is an LCM, load shed kit, or RXT combined interface/ load management board.
† Load management device required.

Status Message	Action	Description/Comments	Check
OB2 CommLoss (option board)	Notice	Communication with option board #2 has been lost.	Check RBUS wiring to inoperative option board. (PIM, RXT, or load mgmnt device) ‡
OB3 CommLoss (option board)	Notice	Communication with option board #3 has been lost.	Check RBUS wiring to inoperative option board. (PIM, RXT, or load mgmnt device) ‡
OB4 CommLoss (option board)	Notice	Communication with option board #4 has been lost.	Check RBUS wiring to inoperative option board. (PIM, RXT, or load mgmnt device) ‡
Rmt StartCmd (Remote Start Command Issued)	Notice	The controller has received a remote start signal while the master switch is in AUTO, and will go to normal running.	Verify remote start signal. Consult ATS operations manual for cause of generator start.
Run Btn Ack (Run Button Acknowledged)	Notice	The RUN button on the controller has been pushed.	—
Start Delay (Engine Start Delay Active)	Notice	The digital output for Engine Start Delay (PIM) is active (contacts closed), indicating the engine is in between active cranking cycles.	—
System Ready	Notice	The digital output for System Ready (PIM) is active (contacts closed), indicating the generator has no active faults or warnings.	—
VSpdStartCmd (Variable Speed Start Command)	Notice	A diagnostic exercise request has been received by the controller.	Check for a remote exercise command from KOHLER Energy Management app.
Load Shed 1 Status Info †	Notice	The digital output for LoadPriority1Shed is active (contacts closed), indicating the 1st priority load shed has been activated.	—
Load Shed 2 Status Info †	Notice	The digital output for LoadPriority2Shed is active (contacts closed), indicating the 2nd priority load shed has been activated.	—
Load Shed 3 Status Info †	Notice	The digital output for LoadPriority3Shed is active (contacts closed), indicating the 3rd priority load shed has been activated.	—
Load Shed 4 Status Info †	Notice	The digital output for LoadPriority4Shed is active (contacts closed), indicating the 4th priority load shed has been activated.	—
Load Shed 5 Status Info †	Notice	The digital output for LoadPriority5Shed is active (contacts closed), indicating the 5th priority load shed has been activated.	—
Load Shed 6 Status Info †	Notice	The digital output for LoadPriority6Shed is active (contacts closed), indicating the 6th priority load shed has been activated.	—

* Programmable Interface Module (PIM) required.
‡ A load management device is an LCM, load shed kit, or RXT combined interface/ load management board.
† Load management device required.

Figure 54 Status Messages Displayed on the RDC2 Controller

Generator Set State	Description
Generator Management Off	This generator has been stopped by generator management because it is not presently needed to supply the load. The generator is available and will start if it is needed again.
ProtectiveRelayTrippedContactor	The contactor has been forced to open to protect one of the generators or the customer's load.
Synchronizing	The generator is actively trying to match frequency, voltage and phase with that of the paralleling bus.
Unloading	The generator is actively trying to transfer load from itself to the other generator.

Figure 55 Generator Set States Related to Paralleling

5.15 Troubleshooting Chart

Use the following table as a reference in troubleshooting individual problems. Generator set faults are listed in groups and include likely causes and remedies. The simplest and most likely causes of the problem are listed first; follow the recommendations in the order shown. The reference column provides additional sources of information in this and related manuals regarding the problem and solution.

Problem	Possible Cause	Test	Corrective Action	Reference
Generator set engine does not crank	Battery connections	Check for reversed or poor battery connections.	Correct and tighten battery connections.	—
	Weak or dead battery	Check the battery voltage. Test battery according to battery manufacturer's recommendations.	Recharge or replace battery.	O/M
		Check battery charger connections and utility power connection to the generator set.	Tighten connections. Connect 120VAC power to the genset terminal block.	I/M
	Open circuit in engine/controller connections	Check for loose connections. Check the wire harness continuity.	Tighten connections. Replace harness or harness leads if damaged.	Continuity Checks section Wiring Diagrams section
	Poor ground (-) connection	Test ground connection.	Clean and retighten.	—
	Starter relay	Check connections to the starter relay.	Tighten connections. Replace wiring if damaged.	Start (Crank) and Run Relays section Wiring Diagrams section
		Check continuity of circuit.		Continuity Checks section Wiring Diagrams section
		Check that the starter relay picks up when 12 VDC is applied at lead 71 connection.	Replace starter relay.	Wiring Diagrams section
	Starter	Check starter connections.	Tighten connections. Replace wiring if damaged.	Wiring Diagrams section
		Troubleshoot the starter. See the engine service manual for instructions.	Rebuild or replace starter.	Engine S/M
	Controller	Check for 12 VDC to the controller.	Check battery and connections.	W/D
		Check the genset model, engine model, and other controller settings.	Adjust controller settings, if necessary.	Controller Parameters section
		Troubleshoot the controller as described in the Controller Troubleshooting section.	See the Controller Troubleshooting section.	Controller Troubleshooting section
	Emergency Stop circuit open	Check for Emerg Stop Shutdown on controller display. Check optional emergency stop button position and connections.	Reset emergency stop button and reset controller fault. Check ESS and ESN connections. If not equipped with E-Stop button, verify that ESS and ESN are connected together.	Emergency Stop Button section
Cranks but does not start	No fuel	Verify that manual fuel valve is open. Check fuel supply tank (LP).	Open (turn on) manual fuel valve. Contact fuel supplier to add fuel to fuel supply tank (LP).	—

W/D = Wiring Diagram(s) section S/S = Generator Set Specification Sheet O/M = Generator Set Operation Manual

I/M = Generator Set Installation Manual Engine S/M = Engine Service Manual

* RDC2 controller settings can be checked and adjusted using the controller user interface or using a personal computer running SiteTech software. DC2 controller settings can only be changed using SiteTech.

Problem	Possible Cause	Test	Corrective Action	Reference
Cranks but does not start, continued	Insufficient fuel pressure	Check fuel pressure to the generator set. Verify adequate fuel pressure and pipe size for the generator set plus all other gas appliances.	Contact fuel supplier to replace fuel supply lines with larger pipe and replace gas meter if fuel pressure is insufficient.	Fuel Regulators section
	Fuel regulator/valve	Check regulator/valve operation.	Check regulator/valve operation.	Fuel Systems section Controller section
	Weak battery	Check the battery voltage. Check battery charger connections and utility power connection to the generator set.	Recharge or replace battery. Tighten loose connections.	O/M Wiring Diagrams section
	Spark plugs or spark plug connections	Check spark plug wires and connections. Check spark plugs.	Tighten connections. Replace spark plug wires if damaged. Replace or clean and regap spark plugs.	O/M
	Loose connection or open circuit	Check for loose or open connection at the fuel valve (lead 70A) and at the engine spark control module (leads IGN and 70B). Check controller/engine wiring continuity.	Tighten connections. Replace wiring if damaged.	Wiring Diagrams section
	Air cleaner clogged	Check for a dirty air cleaner element.	Replace air cleaner element. Check and replace air cleaner element at the intervals shown in the Service Schedule.	O/M
	Incorrect controller settings	Check the genset model setting.	Enter the correct genset model number setting. Engine model is selected automatically based on genset model.	Controller Parameters section
	Ignition system spark control or ignition coil	Test according to instructions in the engine service manual.	Adjust or replace components as indicated in engine service manual.	Engine S/M
	Ignition timing leads incorrectly connected or disconnected (14RCA(L) only)	Check ignition timing leads. (14RCA(L) only) Check for loose connections.	Connect for natural gas. Disconnect for LP. Tighten connections. Replace wiring if damaged.	Ignition Timing Leads (14RCA(L) only) section
	No engine rotation sensed (check for an overcrank or locked rotor fault shutdown)	Check the cranking circuit.	Troubleshoot engine and alternator.	Engine S/M
Starts hard	Low battery voltage	Check battery voltage during cranking. Check battery charger connections and utility power connection to the generator set.	Charge battery. Replace battery if necessary. Tighten loose connections.	O/M Wiring Diagrams section
	Air cleaner clogged	Check for a dirty air cleaner element.	Replace element.	O/M
	Fuel mixture adjustment incorrect	Use oxygen sensor to check fuel mixture.	Adjust fuel mixture.	Fuel Systems section
	Ignition timing leads incorrectly connected or disconnected (14RCA(L) only)	Check ignition timing connection.	Connect for natural gas. Disconnect for LP. (14RCA(L) only)	Ignition Timing Leads (14RCA(L) only) section

W/D = Wiring Diagram(s) section S/S = Generator Set Specification Sheet O/M = Generator Set Operation Manual

I/M = Generator Set Installation Manual Engine S/M = Engine Service Manual

* RDC2 controller settings can be checked and adjusted using the controller user interface or using a personal computer running SiteTech software. DC2 controller settings can only be changed using SiteTech.

Problem	Possible Cause	Test	Corrective Action	Reference
Starts hard, continued	Spark plug(s)	Check spark plug condition and gap.	Replace or regap spark plug(s).	O/M
	Spark plug wire(s)	Check spark plug wires and connections.	Tighten connections. Replace spark plug wires if damaged.	Engine S/M
	Ignition components (spark control or ignition module)	Test ignition components according to instructions in the engine service manual.	Replace ignition components if necessary.	Engine S/M
	Insufficient fuel pressure	Check fuel pressure to the generator set. Verify adequate fuel pressure and pipe size for the generator set plus all other gas appliances.	Contact fuel supplier to replace fuel supply lines with larger pipe and replace gas meter if fuel pressure is insufficient.	Fuel Regulators section
	Engine problem.	Troubleshoot the engine.	See engine service manual.	Engine S/M
Noisy operation	Exhaust system leaks	Check silencer and connections for leaks.	Replace gaskets and exhaust system components as necessary.	—
	Engine not running smoothly	See “Erratic operation,” this table.	See “Erratic operation,” this table.	—
	Broken or damaged vibromount(s)	Inspect vibromounts.	Replace as necessary.	Disassembly/Reassembly section
	Loose or vibrating sheet metal/housing	Check for loose screws and rivets.	Retighten screws, replace rivets.	—
	Exhaust piping or air inlets/outlets not securely installed	Inspect for loose parts.	Secure loose parts as necessary.	—
	Excessive engine/ generator vibration	Check rotor, crankshaft, bearing, etc. (disassembly of engine and/or alternator may be required).	Check, rotor, crankshaft, bearing, etc. (disassembly of engine and/ or alternator may be required).	Disassembly/Reassembly section Engine S/M
Overheats	Inadequate cooling	Inspect engine and enclosure for air intake obstructions.	Clear any air intake obstructions.	O/M
	Air cleaner clogged.	Check for a dirty air cleaner element.	Replace air cleaner element.	O/M
Stops suddenly	Fault shutdown	Check for a fault shutdown message on the controller display. Identify the cause of the fault.	Correct the fault and then press the controller’s OFF button to reset the controller.	Fault Messages section
	No fuel	Check fuel valves and fuel supply.	Open manual fuel valve. Contact fuel supplier to replenish fuel supply.	—
	Fuel line restriction	Inspect fuel lines.	Clear restriction.	—
	Fuel lines too long	Check fuel line length and pipe size.	Contact fuel supplier to replace fuel lines with larger pipe.	Generator set S/S, I/M
	Air cleaner clogged	Check for a dirty air cleaner element.	Replace air cleaner element.	O/M
	Spark plug(s)	Check spark plug(s).	Replace or regap plug(s).	O/M

W/D = Wiring Diagram(s) section S/S = Generator Set Specification Sheet O/M = Generator Set Operation Manual

I/M = Generator Set Installation Manual Engine S/M = Engine Service Manual

* RDC2 controller settings can be checked and adjusted using the controller user interface or using a personal computer running SiteTech software. DC2 controller settings can only be changed using SiteTech.

Problem	Possible Cause	Test	Corrective Action	Reference
Stops suddenly, continued	Engine overheated (hot engine only)	Check air intake and generator set enclosure air inlets and outlet. Use oxygen sensor to check fuel mixture. Check oil level.	Clear air intake and enclosure air inlets and outlets. Adjust fuel mixture. Add oil. Check and replace oil at the intervals shown in the Service Schedule.	O/M Fuel Systems section O/M
	Low oil pressure (LOP) switch	Check oil pressure. Attempt startup. If unit shuts down, remove lead from LOP switch and reset controller. A successful restart attempt indicates a faulty LOP shutdown switch. **Note:** Check engine oil pressure before performing test and/or replacing LOP shutdown switch.	See engine S/M. Replace faulty LOP shutdown switch. **Note:** Check engine oil pressure before performing test and/or replacing LOP shutdown switch.	Engine S/M Fault Shutdown Switches section
	Fuel valve/fuel regulator	Check fuel valve connections. Check regulator/valve operation. Check fuel pressure.	Tighten fuel valve connections. Replace damaged wires. Replace regulator or valve.	Fuel Systems section
	Engine overloaded	Reduce electrical load and check operation.	Unplug some lights or appliances connected to the generator set.	—
	Engine speed sensing connections	Check for loose connections: FP, FN, 55, 66, and connections to the line circuit breaker.	Tighten connections. Replace damaged wiring.	Wiring Diagrams section
	Ignition module	Test the ignition system according to the instructions in the engine service manual.	Service the ignition system according to the instructions in the engine service manual.	Engine S/M
	Loss of generator output voltage to controller	Check connections at P2 plug. Check continuity of AC sensing leads 11 and 44. See the Component Testing and Adjustment section for alternator test procedures.	Tighten connections at P2 plug. Replace wiring if damaged. Repair or replace components if necessary, as indicated by tests in the Component Testing and Adjustment section.	Wiring Diagrams section Stator section Component Testing and Adjustment section
	Tripped thermostat	Check for evidence of high temperature inside enclosure.	Reset thermostat by pressing button. Reset fault at controller.	Thermostat section
Erratic operation	Air cleaner clogged	Check air filter element.	Replace element.	O/M
	Spark plug(s)	Check spark plug condition and gap.	Replace or regap plugs.	O/M
	Spark plug wire(s)	Check spark plug connections and wires.	Tighten connections. Replace damaged spark plug wires.	Engine S/M
	DSAM leads incorrectly connected or disconnected (14RCA(L) only)	Check DSAM/ignition timing lead connection.	Connect for natural gas. Disconnect for LP. (14RCA(L) only)	Ignition Timing Leads (14RCA(L) only) section
	Fuel line restriction	Check fuel lines. Check fuel pipe size.	Clear restricted fuel lines. Contact fuel supplier to install larger diameter pipe.	Fuel Regulators section

W/D = Wiring Diagram(s) section S/S = Generator Set Specification Sheet O/M = Generator Set Operation Manual

I/M = Generator Set Installation Manual Engine S/M = Engine Service Manual

* RDC2 controller settings can be checked and adjusted using the controller user interface or using a personal computer running SiteTech software. DC2 controller settings can only be changed using SiteTech.

Problem	Possible Cause	Test	Corrective Action	Reference
Erratic operation, continued	Fuel mixture adjustment incorrect	Use oxygen sensor to check fuel mixture.	Adjust fuel mixture.	Fuel Systems section
	Governor adjustment incorrect	Check governor operation. Check controller engine speed setting. *	Adjust governor. Adjust engine speed setting on controller. *	Governor System section Controller Parameters section
	Ignition system	Test ignition system according to instructions in engine service manual.	Service ignition system according to instructions in engine service manual.	Engine S/M
	Inadequate cooling (hot engine only)	Check air inlet and outlet.	Clear air inlet and outlet.	—
	Other engine service required	See engine service manual.	Service according to instructions in engine service manual.	Engine S/M
High output voltage	Incorrect controller settings	Check genset model, engine model, system voltage, and other controller settings. *	Adjust the controller settings. *	Controller Parameters section
	Incorrect voltage calibration	Check the voltage calibration.*	Adjust the voltage calibration. *	Voltage Calibration section
	Loose voltage sensing connections	Check connections: stator leads 11 and 44 and P2 controller connection.	Tighten connections.	Wiring Diagrams section
Lacks power	Air intake restriction, inadequate cooling	Inspect air intakes and exhaust for obstructions. Check air cleaner.	Clear air intakes and exhaust area. Maintain clearances shown on the genset dimension drawing. Replace air cleaner element.	I/M O/M
	Generator overloaded	Reduce electrical load and check operation.	Unplug some lights or appliances connected to the generator set.	—
	Spark plug(s)	Check spark plugs.	Regap or replace plug(s).	O/M
	Spark plug connections	Check tightness and condition of spark plug wires.	Tighten or replace spark plug wires.	Engine S/M
	Ignition timing leads incorrectly connected or disconnected (14RCA(L) only)	Check ignition timing leads. Connect for natural gas. Disconnect for LP.	Connect for natural gas. Disconnect for LP. (14RCA(L) only)	Ignition Timing Leads (14RCA(L) only) section
	Low fuel pressure	Check fuel pressure at carburetor outlet. Check for adequate fuel pipe size and meter capacity for generator set and all gas-fired appliances.	Contact fuel supplier to replace pipe and/or meter as required to provide sufficient fuel supply pressure for the generator set and all gas-fired appliances.	Fuel Systems section
	Fuel line restriction	Check fuel pipe size.	Contact fuel supplier to provide larger pipe.	Fuel Systems section
	Fuel regulator	Check function of fuel regulator.	Repair or replace fuel regulator.	Fuel Systems section
	Engine not running at rated rpm	Check controller setting for engine model. * Check engine speed.	Select the correct engine model. * Adjust engine speed.	Controller Parameters section

W/D = Wiring Diagram(s) section S/S = Generator Set Specification Sheet O/M = Generator Set Operation Manual

I/M = Generator Set Installation Manual Engine S/M = Engine Service Manual

* RDC2 controller settings can be checked and adjusted using the controller user interface or using a personal computer running SiteTech software. DC2 controller settings can only be changed using SiteTech.

Problem	Possible Cause	Test	Corrective Action	Reference
Lacks power, continued	Engine power loss	Refer to the engine service manual for troubleshooting and repair instructions.	Refer to the engine service manual for troubleshooting and repair instructions.	Engine S/M
	Governor malfunction or misadjustment	Test governor.	Adjust governor.	Governor System section
	Ignition system	See the engine service manual for service procedures.	See the engine service manual for service procedures.	Engine S/M
Low output or excessive drop in voltage	Generator overloaded	Reduce electrical load and check operation.	Unplug some lights or appliances connected to the generator set.	—
	Incorrect controller settings	Check the controller settings. *	Adjust the controller settings. *	Controller Parameters section
	Incorrect controller voltage settings	Check the controller voltage settings. *	Adjust the controller voltage settings. *	Controller Parameters section
	Alternator or control system	Perform separate excitation procedure to isolate problem to the alternator or the control system.	Troubleshoot the alternator or control system as indicated by test results.	Alternator Excitation section
	Controller	Check the controller settings.	Adjust controller settings.	Controller Parameters section
		Test the controller as described in the Controller Troubleshooting section	See the Controller Troubleshooting section.	Controller Troubleshooting section
	Rotor	Test rotor for open, grounded, or shorted windings.	Replace rotor if faulty windings are found.	Main Field (Rotor) section
	Stator	Test stator for open, grounded, or shorted windings.	Replace stator if faulty windings are found.	Stator section
	Brush connection	Check for loose brush connections. Check for loose brush mounting. Check the resistance through the brushes. Resistance through the brushes should be low, 0.1-0.2 ohms without meter lead resistance.	Tighten loose brush connections. Tighten mounting screws. Replace brushes if they show uneven wear or are worn to one-half their original length.	Brushes section
	Low engine speed causing voltage roll-off	Check system voltage, system frequency, and engine model settings. Check engine speed setting. Engine problem.	Change the controller settings if not correct. * Adjust engine speed setting. Troubleshoot the engine.	Controller Parameters section Controller Parameters section Engine S/M
No output voltage	AC output circuit breaker open	Check for AC voltage on the generator side of circuit breaker. If there is AC voltage on the generator side of the breaker, then a problem in the load circuits is causing the line circuit breaker to trip.	Check for and correct short circuits or overloading on the load side before resetting the circuit breaker.	—

W/D = Wiring Diagram(s) section S/S = Generator Set Specification Sheet O/M = Generator Set Operation Manual

I/M = Generator Set Installation Manual Engine S/M = Engine Service Manual

* RDC2 controller settings can be checked and adjusted using the controller user interface or using a personal computer running SiteTech software. DC2 controller settings can only be changed using SiteTech.

Problem	Possible Cause	Test	Corrective Action	Reference
No output voltage continued	Alternator or control system	Perform separate excitation procedure to isolate the problem to the alternator or the control system.	Troubleshoot the alternator or control system components as described below and elsewhere in this table.	Alternator Excitation section
	Controller	Check the controller settings.	Adjust controller settings.	Controller Parameters section
		Troubleshoot the controller as described in the Controller Troubleshooting section.	See the Controller Troubleshooting section.	Controller Troubleshooting section
	Open wiring, terminal, or pin in buildup circuit	Check wiring.	Replace wiring as necessary.	Wiring Diagrams section
	Brushes	Inspect brushes.	Replace brushes if worn.	Brushes section
		Check for brushes sticking in brush holder or broken brush spring.	Replace brush spring or brush assembly.	Brushes section
		Check that brush holder is securely mounted.	Tighten brush holder screws.	Brushes section
	Rotor slip rings dirty or corroded	Check slip ring condition.	Clean slip rings as described in the Slip Rings section. Machine slip rings if necessary.	Slip Rings section
	Rotor (open, grounded, or shorted windings)	Check voltage and continuity as described in the Main Field (Rotor) section.	Repair or replace rotor if indicated by the tests.	Main Field (Rotor) section
	Stator (open, grounded, or shorted windings)	Check voltage and continuity as described in the Stator Section.	Repair or replace the stator if indicated by the test results.	Stator section
	Aux. winding circuit breaker tripped	Check the breaker in the service access area of the controller. If breaker trips again, check stator.	Reset breaker. If breaker trips again, check stator.	USB Port and Auxiliary Winding Mini-Breaker and Circuit Protection section. Stator section
Low oil level (26RCA(L))	Verify oil level	Check the oil level.	Add to correct level on dipstick. Restart the unit and monitor.	Lubrication section
	Low oil level sensor	Verify no continuity to ground on signal wire bac to RDC2.	Trace wiring back to the controller to find short to ground.	Low Oil Level Shutdown section
		Verify level sensor has no continuity to ground.	Replace sensor.	Low Oil Level Shutdown section
		Check if the generator does fault out with low oil level sensor.	Unplug the low oil level sensor and troubleshoot the low oil level sensor.	Controller Fault Shutdown Functions section
Pressure fault (26RCA(L))	Low pressure sensor	Verify the oil pressure.	Verify actual pressure with a mechanical gauge.	Low Oil pressure Shutdown section

W/D = Wiring Diagram(s) section S/S = Generator Set Specification Sheet O/M = Generator Set Operation Manual

I/M = Generator Set Installation Manual Engine S/M = Engine Service Manual

* RDC2 controller settings can be checked and adjusted using the controller user interface or using a personal computer running SiteTech software. DC2 controller settings can only be changed using SiteTech.

5.16 Controller Troubleshooting

Refer to the controller troubleshooting table in Figure 56 when troubleshooting procedures in the Troubleshooting Chart section indicate a possible controller problem. Also check the controller display for fault messages and refer to the Fault Messages section.

Always check the controller settings before replacing the controller. Controller settings can be checked and adjusted through the controller's user interface or using a personal computer and SiteTech™ software. The generator set operation manual contains the instructions for checking and changing the controller settings. See TP-6701, SiteTech Software Operation Manual for instructions to use the software. SiteTech™ software is available to authorized dealers.

Problem	Possible Cause	Corrective Action	Reference
Controller LCD display is off.	Display contrast set too low. Low or no battery voltage	Use controller keypad or SiteTech to adjust contrast. Check controller connections. Check DC power to the RDC2 controller. Check generator set battery connections and condition. Check utility power connection to the generator set terminal block (power for battery charging).	The Genset System Menu, RDC2 figure or generator set Operation Manual. Wiring Diagrams section.
Controller display backlight is off.	Backlight turns off after about 1 minute with no activity	Backlight will turn on when a button is pressed or the generator set starts.	—
Loss of communication to accessory modules.	Bad connections	Check wiring and connections. Verify that cable size and length of run comply with the instructions in the Installation manual.	Generator set Installation Manual or accessory module documentation.
	Low or no battery voltage	Check generator set battery connections and condition. See "Low or no battery voltage" above.	—
Load management relays do not operate (if equipped).	Bad connections	Check wiring and connections. Verify that cable size and length of run comply with specifications.	Documentation for the load management device or power relay modules.
	Low or no battery voltage	Check generator set battery connections and condition. See "Low or no battery voltage" above.	—
Date is flashing.	Controller power was disconnected and then reconnected	Check battery connections. Check controller connections. Check utility power connection to the generator set terminal block. Reset the time, date, and exercise schedule.	Wiring Diagrams section. Generator set O/M

Figure 56 RDC2 Controller Troubleshooting

5.17 Troubleshooting Load Management Problems

The load control module (LCM), load shed kit, and the combined interface/load management board on the RXT transfer switch are all load management devices that are controlled by the RDC2 controller. If the load management device does not operate as expected, follow the procedures in this section to troubleshoot the equipment. First check that the controller is communicating with the load management device as shown in the following procedure. Then check the troubleshooting tables for potential problems and recommendations.

Also refer to the documentation provided with the load management device for more information about installation, connections, and operation.

5.17.1 Check Controller Firmware

Check the firmware version number on the RDC2.X controller. APM RDC2.X firmware version 101.0.3 or higher is required for load management. Notice that paralleling requires the **APM** RDC2.X controller firmware that has a version number 100 or higher. (Non-paralleling controller firmware version numbers start with a single digit such as 1.3.1.) Update the firmware if necessary.

5.17.2 Verify that the Controller Recognizes the Load Shed Kit

There are three ways to verify that the RDC2 controller recognizes the load management device.

1. On the RDC2 controller, navigate to the Networking Menu and check the number of modules connected and the information for remote devices. See Figure 57 and Figure 58. The number should equal the number of RBUS devices connected, including the load management device, RXT transfer switch (if used), APM (if used), and the PIM (if used). A Model RDT transfer switch is not an RBUS device. Power relay modules connected to the load management device are not RBUS devices.
2. Use a laptop computer connected to the controller's USB port and SiteTech software. In the Parameters view of SiteTech, check that the RBUS network screen shows the correct number of RBUS devices connected (one load management device, RXT transfer switch, PIM, and/or APM, if used). See SiteTech Operation Manual TP-6701 for instructions.
3. Use KOHLER Energy Management app. Go to the Controls screen and check that a Load Shed tab is visible below the exercise information.

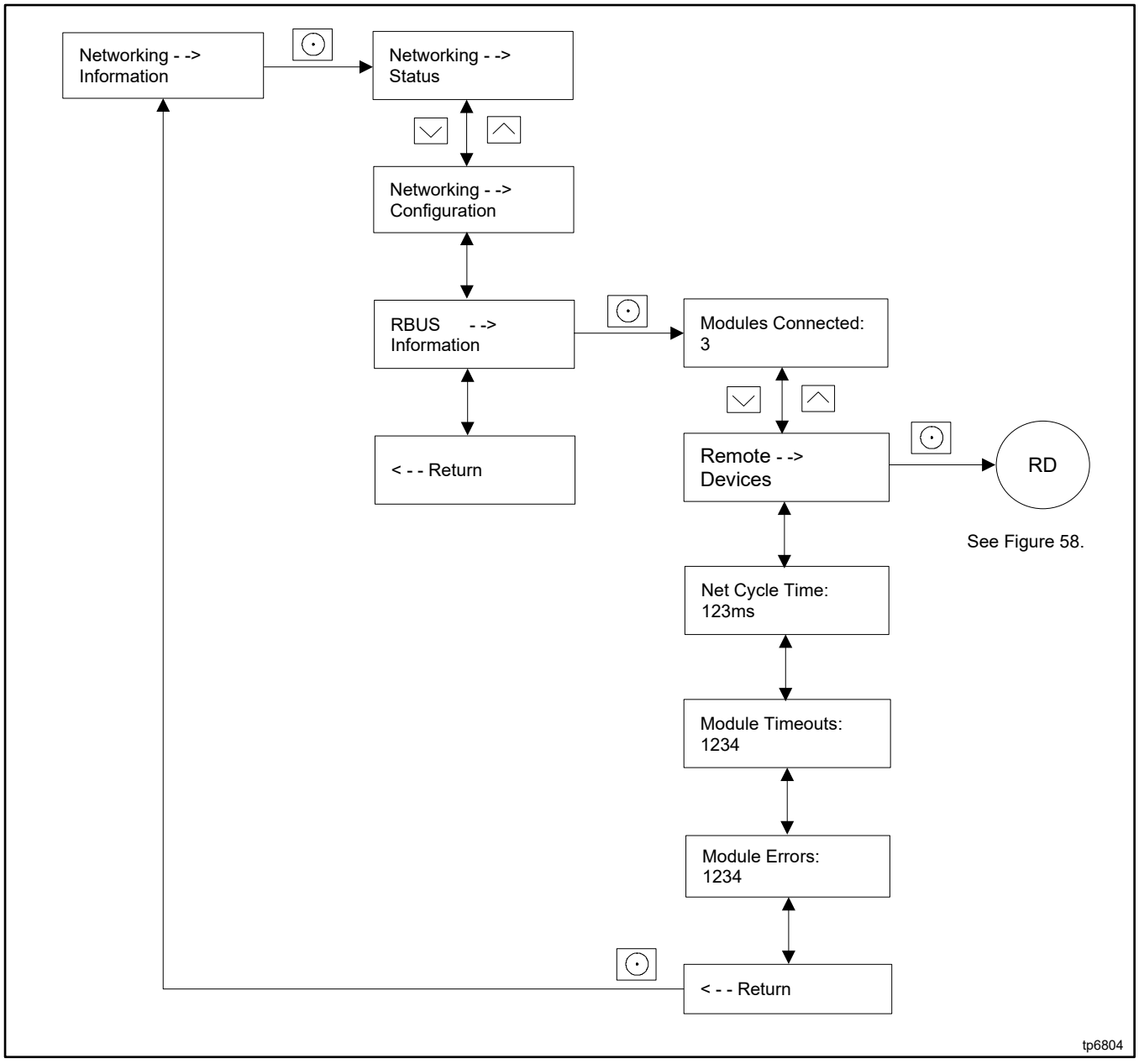

Figure 57 RDC2 Controller, Networking Information Menu

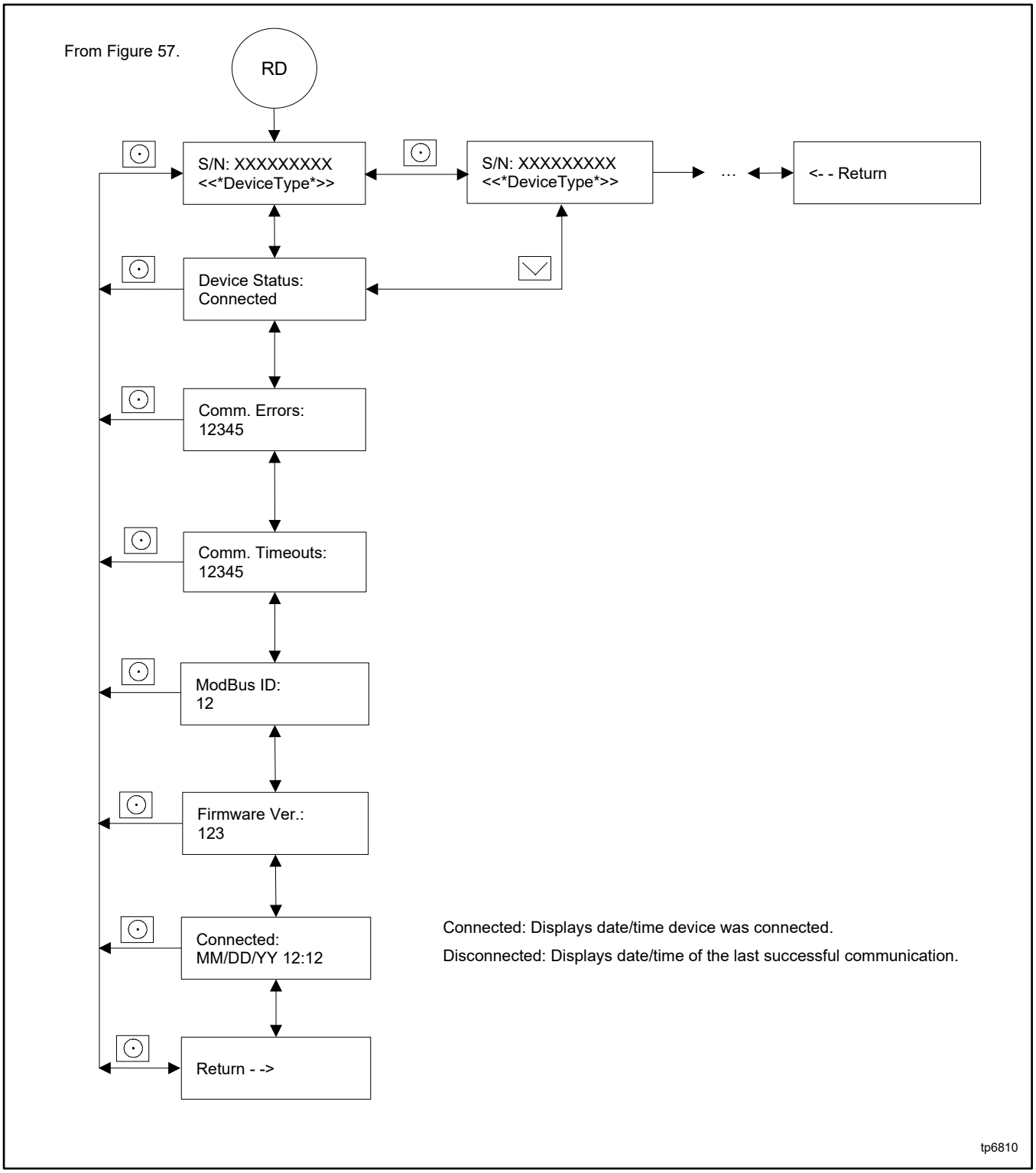

Figure 58 RDC2 Controller, Remote Devices Submenu

Troubleshooting Tables

The following tables list potential load management device operation problems and recommendations for troubleshooting.

Load management functional issues.	
Problem	**Check**
Load shed AC relays do not activate.	Verify 120 VAC supply voltage to relays. Verify correct wiring to the load management device board and AC relays.
Metering always reads 0% under load.	Verify that the Emergency feed to the ATS goes through the CT correctly. Verify that the CT leads are connected to the load management device input correctly. Verify that the correct CT is used. (400 A to 3V)
Metering never reads 0%.	Verify that the CT is wired correctly. Verify that twisted-pair cable was used. Verify that CT wiring is in separate conduit from AC leads.
Load A does not add after initial shed.	Verify that the correct size wires are used for PWR and COM connections from the generator set controller to the load management device. See the installation instructions for the load management device.

Load management does not shed enough load for the generator to recover.	
Problem	**Check**
HVAC units do not shed.	Verify normally closed (NC) output is used to control HVAC.
Does not shed when load is between 85% and 90%.	Verify that the load is not intermittently dropping below 85%. Verify that the load remains above 90% for at least 40 seconds. Verify that the % load is metering correctly. Verify that the overload percent is set at 10% or more below indicated level. Verify that the load management device is communicating with the generator set controller.
Does not shed when load is at 100%.	Verify that the % load is steady at 100% for approximately 25 seconds. Verify that the % load is metering correctly. Verify that the overload percent is set at 10% or more below indicated level. Verify that the load management device is communicating with the generator set controller.
Does not shed when load is greater than 110%.	Wait at least 15 seconds. Verify that frequency is greater than 59 Hz. Verify that the load management device is communicating with the generator set controller.
Generator still overloaded when all loads are shed.	Verify that only non-essential loads are connected through the Load Shed Kit. Correctly set up unused relays for the run length. Verify that all load management device AC relays are properly supplied. Verify that the wire size is correct for the run length.

Loads do not add when they should.	
Problem	**Check**
Loads do not add when load is below 56%.	Verify that the generator set maximum load capacity is adequately sized for the application. Verify that the load is not jumping above the maximum capacity.
Loads never add.	Verify that % load is below 50%. Verify that the wiring between the load management device and the generator set controller is correct. Verify that the generator set maximum load capacity is adequately sized for the application. Verify that the load is not jumping above the maximum capacity.

Sporadic load adds and sheds.	
Problem	**Check**
Load adds and then sheds after about 6 seconds.	Verify that the fuel pressure to the generator set is within specification. Verify that the % load is correctly measured. Verify that the wiring between the load management device and the CT meets specifications. Verify that the Generator Set maximum Load Capacity is not set too high. One AC relay may have too much load. Even out the loads on the AC relays. Verify that generator frequency is within specification.
Loads continually add and shed.	One AC relay may have too much load. Even out the loads on the AC relays. Verify that the controller firmware has been updated. See the Check Controller Firmware section. Verify that generator frequency is within specification.
Some loads add but then all loads shed suddenly.	Verify stable communication between the load management device and the ATS with the generator controller. One AC relay may have too much load. Even out the loads on the AC relays. Verify that generator frequency is within specification.

Load does not shed after transfer to Emergency.	
Problem	**Check**
Load does not shed after transfer to Emergency.	Verify that frequency is greater than 59 Hz. Verify that the transfer switch is a model RXT. Verify that the remote start signal is true. Verify that generator set controller is configured as a single-phase unit. Verify that the load management device sensed load is less than 7%.
Load sheds when Normal is available.	Verify that the ATS is connected correctly. Verify that the system indicates that the Normal source is available. If an RDT transfer switch is used, verify that the remote start signal is off (false). Verify that the load management device sensed load is less than 7%.

6.1 Theory of Operation

The generator set utilizes a rotating-field alternator to produce AC voltage. See Figure 59 and Figure 60. Refer to the Wiring Diagrams section for the complete generator set schematics.

When the controller receives a start signal, it energizes leads FP and 71. FP energizes the rotor field and lead 71 energizes the crank relay P16. The field current generates a magnetic field that produces AC voltage when it rotates. The controller monitors this AC voltage to determine the engine speed. When the controller senses cranking speed, run relay P17 is energized and the engine is permitted to start. When the engine speed reaches about 750 RPM, the alternator produces sufficient voltage to self-excite. The controller drops power to lead 71, ending the start sequence. (See the Theory of Operation, Electronic Start Sequence section for a step-by-step engine start sequence.)

When self-excited, the alternator field is energized by voltage produced in the auxiliary windings, which are designed solely to provide current to the alternator field. This current is controlled by the generator controller to maintain output voltage at the generator's rated level (more field current is required as the load on the generator increases).

Note:
The controller does not excite the field during the warmup or cooldown portion of the cycle exercise. The field is also disabled during cooldown and fault cooldown (occurs after certain faults prior to shutting down).

The controller monitors the generator output voltage through leads 11 and 44 (single-phase) or leads V7, V8, and V9 (three-phase). It receives a speed signal and power for exciting the field from the auxiliary windings 55 and 66 and supplies current to the alternator field through outputs FP and FN.

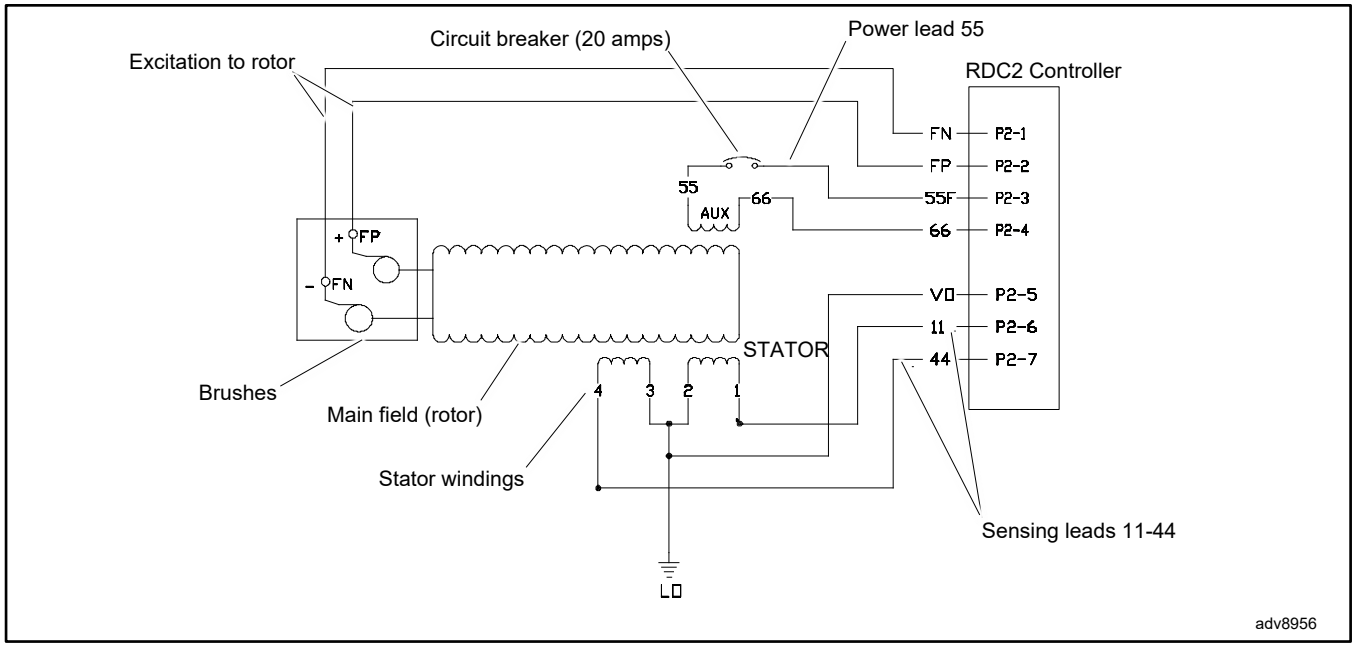

Figure 59 Single-Phase Alternator Schematic

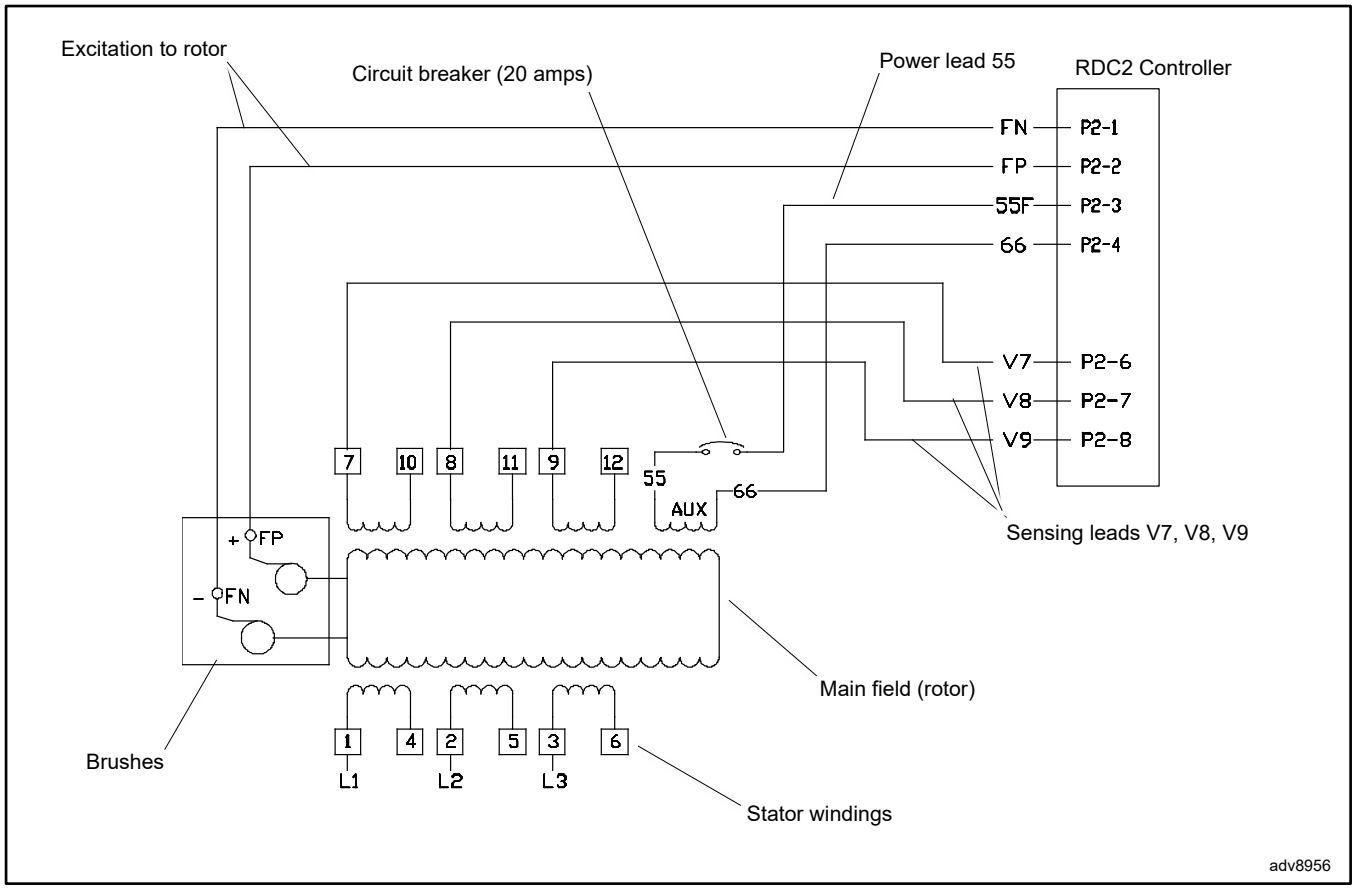

Figure 60 Three-Phase Alternator Schematic

6.2 Alternator Excitation

DANGER	
	**Hazardous voltage. Moving parts.** **Will cause severe injury or death.** Operate the generator set only when all guards and electrical enclosures are in place.

Testing live electrical circuits. Hazardous voltage or current will cause severe injury or death. Have trained and qualified personnel take diagnostic measurements of live circuits. Use adequately rated test equipment with electrically insulated probes and follow the instructions of the test equipment manufacturer when performing voltage tests. Observe the following precautions when performing voltage tests: (1) Remove all jewelry. (2) Stand on a dry, approved electrically insulated mat. (3) Do not touch the enclosure or components inside the enclosure. (4) Be prepared for the system to operate automatically. *(600 volts and under)*

Short circuits. Hazardous voltage/current will cause severe injury or death. Short circuits can cause bodily injury and/or equipment damage. Do not contact electrical connections with tools or jewelry while making adjustments or repairs. Remove all jewelry before servicing the equipment.

6.2.1 No to Low Voltage Operation

This section covers the operation of the alternator excitation and troubleshooting information for low or no voltage output.

Before beginning the test procedures, read all safety precautions at the beginning of this manual. Many of the test procedures include additional safety precautions.

After crank disconnect, controller will disengage the flash relay when the AC output of the generator reaches 1/4 of the output voltage. At this level, the output on the auxiliary windings should have reached a level sufficient to self-excite the alternator rotor field. If the output voltage does not exceed 1/3 of rated voltage, the generator is only producing voltage using the flash relay. To further isolate the cause of this failure:

1. Check the condition of the auxiliary winding circuit breaker. The circuit breaker is located on the engine compartment side of the bulkhead. See the service views section. If this breaker is open, the auxiliary winding current will not be able to reach the field and the field will only be supplied by the flash relay. If the breaker is tripped, stop the generator, disconnect P2 and verify no continuity between ground and each of 55, 66, FP, FN.
2. Verify the connections for 55, 55F and 66 per the Single-Phase Alternator Schematic figure.
3. Reconnect P2, start the generator and check for voltage between 55 and 66. This voltage should exceed 30 Volts AC when the AC output voltage is above 60 Volts AC. If the voltage does not exceed 30 VAC, stop the generator and complete the rotor and stator checks in the Stator and the Main Field (Rotor) sections.
4. Check DC voltage between FP and FN. If this voltage is above 20 VDC, stop the generator and complete the rotor and stator checks in the Stator and the Main Field (Rotor) sections.
5. If the auxiliary winding voltage exceeds 30 VAC and the field voltage does not exceed 20 VDC, replace the generator controller.

6.2.2 Erratic Voltage Regulation

Dramatic variations in the alternator voltage (more than 5 VAC) while the generator is operating at a steady load may cause flicker. Connect a flicker lamp to the generator output to determine if the generator is producing flicker. If flicker is observed, it can be caused by any of the following:

- Engine speed fluctuation. Refer to the Governor System and the Frequency Adjustment sections for troubleshooting.
- Alternator fault. Refer to the Stator and the Main Field (Rotor) sections for troubleshooting.
- Outer loop gain too high. Refer to the Voltage Adjustments section.
- Internal controller stability circuit failure, indicated by excessive throttle movement, excessive voltage fluctuation, and dramatic flicker.

6.2.3 Separate Excitation

Use the following procedure to separately excite the generator using an external voltage source (a 12-volt automotive battery).

Separately exciting the generator can identify faulty voltage regulation by the controller or reveal a running fault in the rotor and/or stator. An external power source duplicates the role of the voltage regulator and excites the generator field (rotor).
A generator component that appears to be in good condition while stationary may exhibit a running fault (open or short circuit) while moving. Centrifugal forces acting on the windings during rotation may cause a broken circuit to open.

Increasing temperatures can cause the insulation to break down, resulting in a running fault. If this test shows that the rotor and stator are in good condition, test the voltage regulation using the tests in the Voltage Adjustments section.

DANGER	**Hazardous voltage. Moving parts.** **Will cause severe injury or death.** Operate the generator set only when all guards and electrical enclosures are in place.
	

Testing live electrical circuits. Hazardous voltage or current will cause severe injury or death. Have trained and qualified personnel take diagnostic measurements of live circuits. Use adequately rated test equipment with electrically insulated probes and follow the instructions of the test equipment manufacturer when performing voltage tests. Observe the following precautions when performing voltage tests: (1) Remove all jewelry. (2) Stand on a dry, approved electrically insulated mat. (3) Do not touch the enclosure or components inside the enclosure. (4) Be prepared for the system to operate automatically. *(600 volts and under)*

Grounding electrical equipment. Hazardous voltage will cause severe injury or death. Electrocution is possible whenever electricity is present. Ensure you comply with all applicable codes and standards. Electrically ground the generator set, transfer switch, and related equipment and electrical circuits. Turn off the main circuit breakers of all power sources before servicing the equipment. Never contact electrical leads or appliances when standing in water or on wet ground because these conditions increase the risk of electrocution.

Short circuits. Hazardous voltage/current will cause severe injury or death. Short circuits can cause bodily injury and/or equipment damage. Do not contact electrical connections with tools or jewelry while making adjustments or repairs. Remove all jewelry before servicing the equipment.

Separate Excitation Procedure

Perform the following procedure to use an external voltage source to excite the main field (rotor).

1. Disconnect the black FN and FP leads from the alternator at the brush holder terminals.
2. Connect a DC ammeter, 10-amp fuse, and a 12-volt automotive battery to the positive (FP) and negative (FN) brush leads as shown in Figure 61. Note and record the ammeter reading.

   Note:
   The approximate ammeter reading should be the battery voltage divided by the specified rotor resistance. See the Specifications section, for specified rotor resistance values.

   Example:

   $$12\ \text{volts(battery voltage)} \div 4\text{ohms (rotor resistance)} = 3\ \text{amps (rotor current)}$$

3. Start the engine and check that the ammeter reading remains stable. An increasing meter reading indicates a shorted rotor. A meter reading decreasing to zero or an unstable reading suggests a running open. Refer to the Main Field (Rotor) section to test the rotor. If the ammeter reading is stable, proceed to step 4.
4. Check for AC output across the stator leads; see the Stator section. Compare the readings to the AC output values shown in the Specifications section. If the readings vary considerably, a faulty stator is likely. Refer to the Stator section for further information.
5. If this test shows that the rotor and stator are in good condition, check the wiring and fuses. Check the controller settings and connections. See the Controller section.

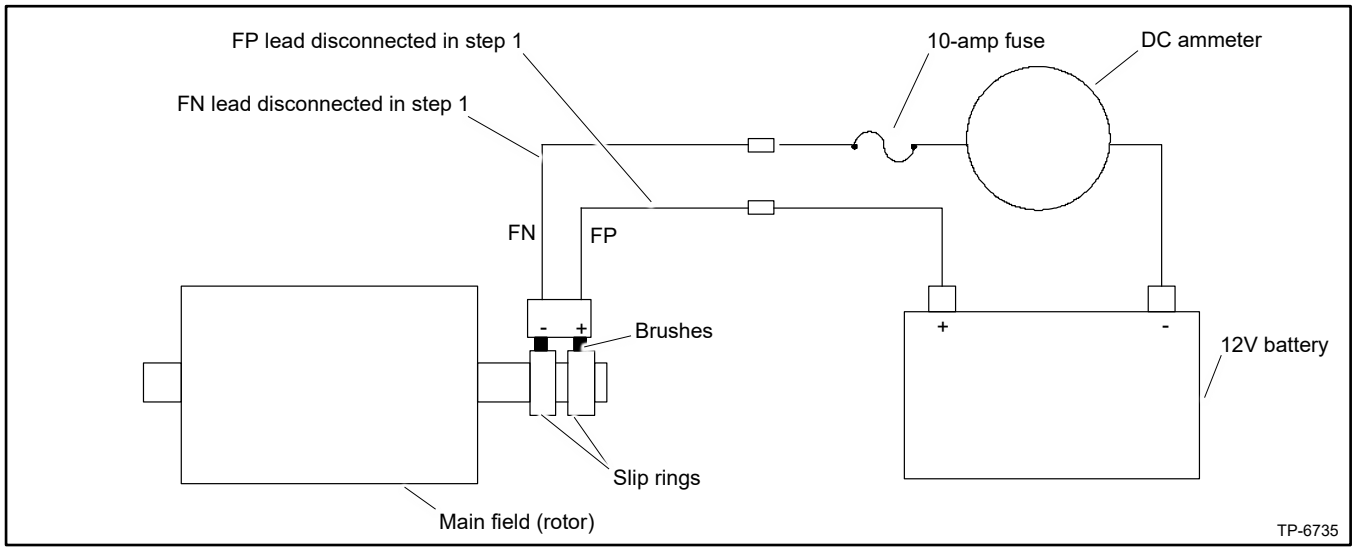

Figure 61 Separate Excitation Connections

6.3 Stator

The stator contains a series of coils of wire laid in a laminated steel frame. The stator leads supply AC voltage to the load and voltage regulator. Before testing the stator, inspect it for heat discoloration and visible damage to housing lead wires, exposed coil windings, and exposed areas of frame laminations. Be sure the stator is securely fastened to the stator housing.

Note:
Disconnect all stator leads before performing all stator tests.

WARNING	**Accidental starting.** **Can cause severe injury or death.** Disconnect the battery cables before working on the generator set. Remove the negative (–) lead first when disconnecting the battery. Reconnect the negative (–) lead last when reconnecting the battery.
	

Disabling the generator set. Accidental starting can cause severe injury or death. Before working on the generator set or equipment connected to the set, disable the generator set as follows: (1) Press the generator set off/reset button to shut down the generator set. (2) Disconnect the power to the battery charger, if equipped. (3) Remove the battery cables, negative (–) lead first. Reconnect the negative (–) lead last when reconnecting the battery. Follow these precautions to prevent the starting of the generator set by the remote start/stop switch.

High voltage test. Hazardous voltage will cause severe injury or death. Follow the instructions of the test equipment manufacturer when performing high-voltage tests on the rotor or stator. An improper test procedure can damage equipment or lead to generator set failure.

Short circuits. Hazardous voltage/current will cause severe injury or death. Short circuits can cause bodily injury and/or equipment damage. Do not contact electrical connections with tools or jewelry while making adjustments or repairs. Remove all jewelry before servicing the equipment.

Stator Continuity and Resistance Tests

1. Press the OFF button on the controller to turn off the generator set.
2. Disconnect utility power to the generator set.
3. Disconnect the generator set engine starting battery, negative (-) lead first.
4. Disconnect all stator leads before performing all stator tests.
5. To check for stator continuity, set the ohmmeter on R x 1 scale. First set the ohmmeter zero by holding the red and black meter leads together and setting the ohmmeter reading to zero. Then check the stator continuity by connecting the meter leads to the stator leads as shown in Figure 62.

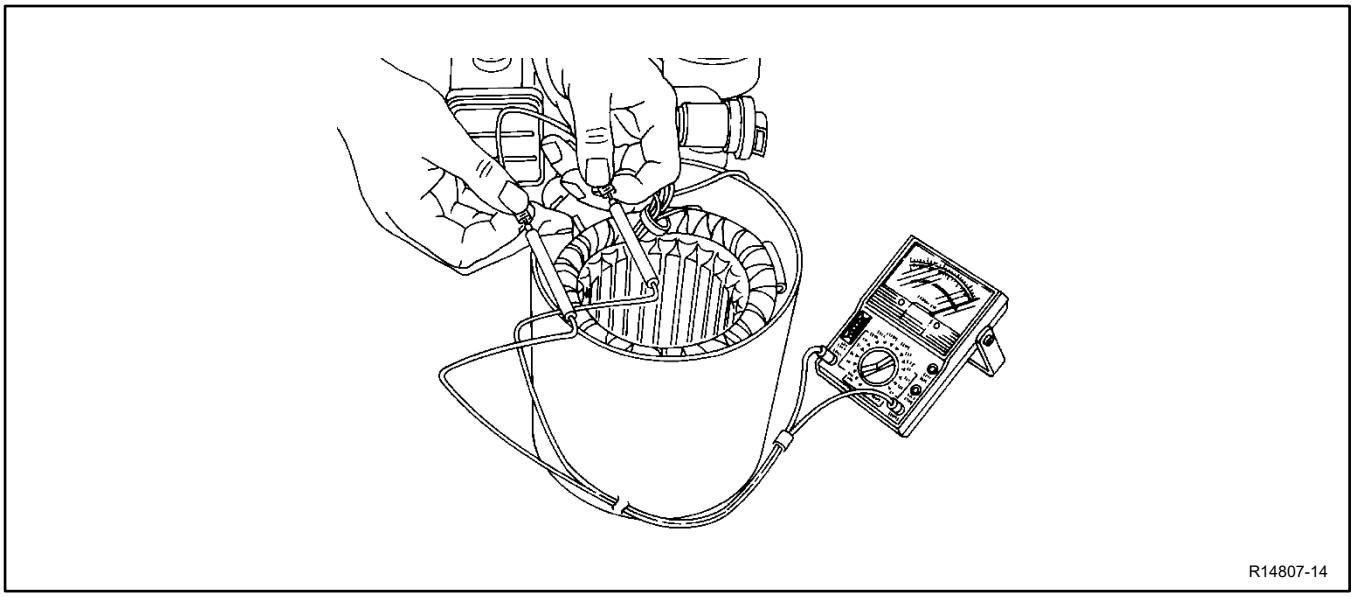

Figure 62 Testing Stator Windings

Note:
For single-phase models. leads 1, 2, 3, and 4 are the generator output leads. Leads 11, 44, 55, and 66 are the controller sensing and supply leads. Refer to the schematic in Figure 63 when performing the following steps.

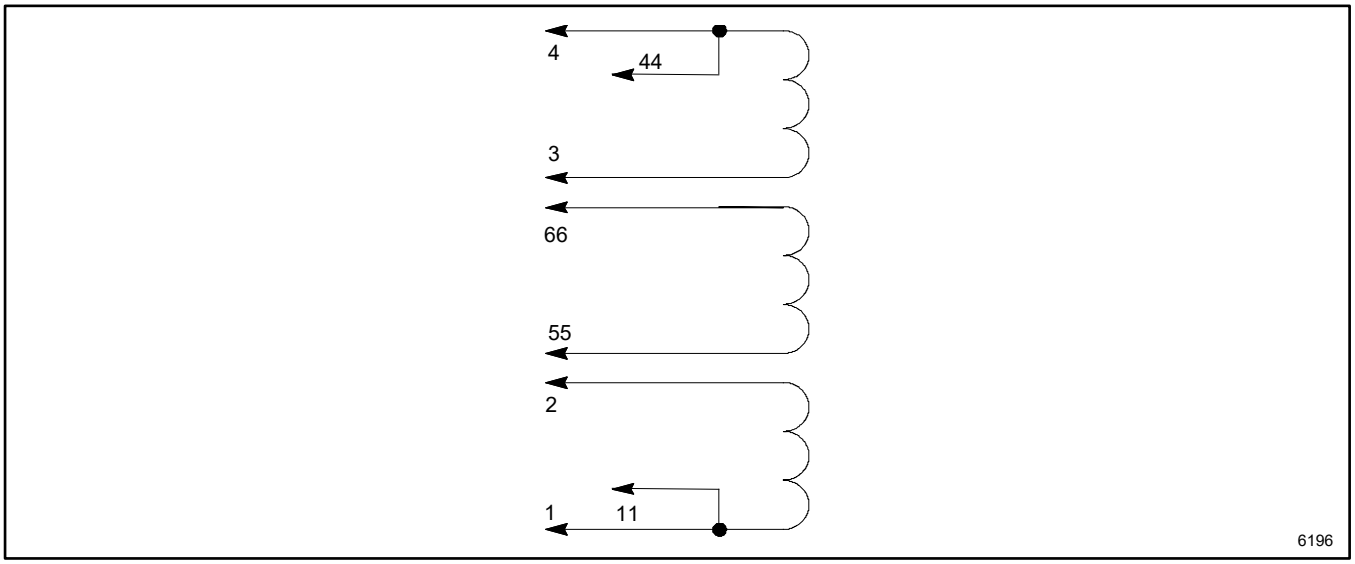

Figure 63 Single-Phase Alternator Stator Leads

Note:
For three-phase models, leads 1-12 are the generator output leads. Leads V7, V8, V9, 55, and 66 are the controller sensing and supply leads. Refer to the schematic in Figure 64 when performing the following steps.

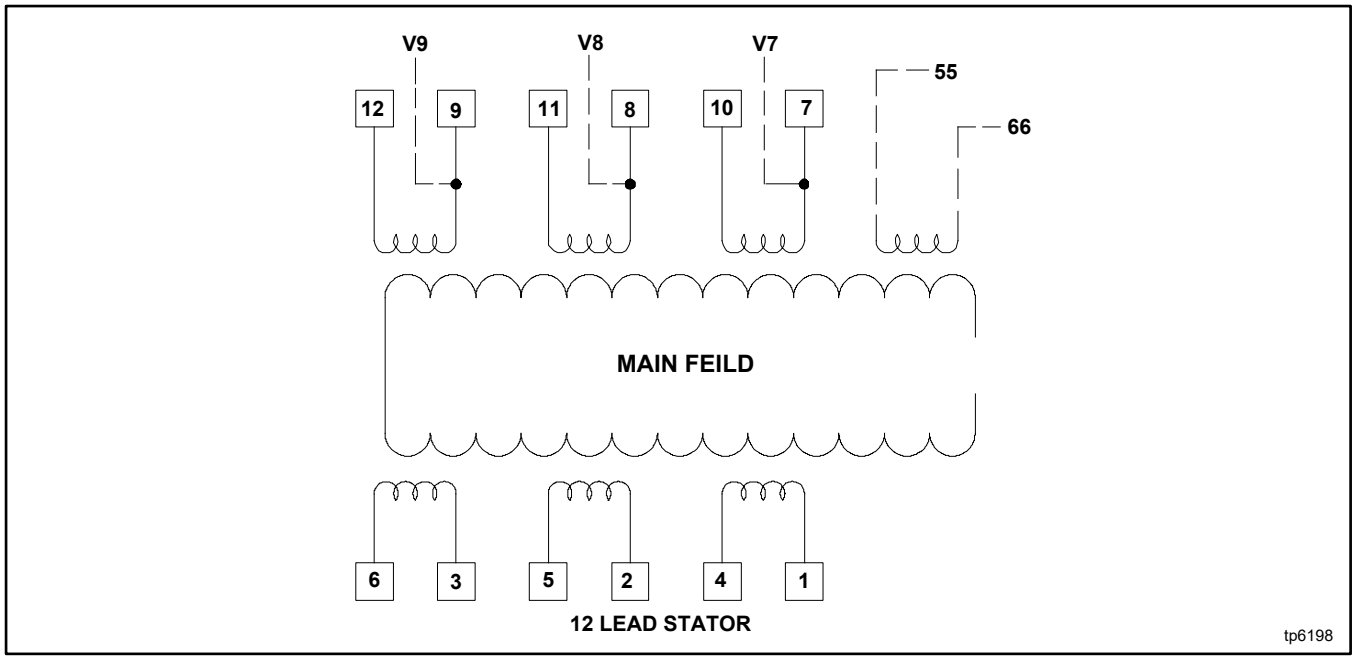

Figure 64 Three-Phase Alternator Stator Leads

6. Contact the ohmmeter leads and readjust the ohmmeter to read zero ohms.
7. Check the cold resistance of the stator windings by connecting the meter leads to stator lead pairs shown in Figure 65 (single-phase) or Figure 66 (three-phase). See the Alternator Specifications section, for stator winding resistances. Most ohmmeters do not provide accurate readings below 1 ohm. Low resistance readings (continuity) and no evidence of shorted windings (heat discoloration) indicate a stator in good condition.

Leads	Continuity
1 and 2	Yes
1 and 11	
2 and 11	
3 and 4	
3 and 44	
4 and 44	
55 and 66	
1 and 3, 4, 44, 55, or 66	No
2 and 3, 4, 44, 55, or 66	
3 and 1, 2, 11, 55, or 66	
4 and 1, 2, 11, 55, or 66	
Any stator lead and ground on stator housing or frame laminations	

Figure 65 Continuity Test Results on a Good Stator, Single-Phase

Leads	Continuity
1 and 4	Yes
2 and 5	
3 and 6	
7 and 10	
8 and 11	
9 and 12	
55 and 66	
1 and 2, 3, 7, 8, 9, 55, or 66	No
2 and 1, 3, 7, 8, 9, 55, or 66	
3 and 1, 2, 7, 8, 9, 55, or 66	
7 and 1, 2, 3, 8, 9, 55, or 66	
8 and 1, 2, 3, 7, 9, 55, or 66	
9 and 1, 2, 3, 7, 8, 55, or 66	
Any stator lead and ground	

Figure 66 Continuity Test Results on a Good Stator, Three-Phase

8. If the resistance test proves inconclusive, use a megohmmeter to test the stator as described in the next step.

   Note:
   Because ohmmeter accuracy varies, resistance readings are approximate readings. Take readings of the rotor and stator at room temperature.

   Note:
   Make sure that all stator leads are disconnected before running the megohmmeter test.

9. Use a megohmmeter to determine whether the stator is shorted to ground.

   a. Apply 500 volts DC to any stator lead and the stator frame. Perform the megohmmeter test following the instructions of the megohmmeter manufacturer.

   b. Repeat the test on the other stator leads until each coil is tested.

      Note:
      A reading of approximately 500 kOhms (1/2 megohm) and higher indicates a good stator.

   c. Repair or replace the stator if any reading is less than approximately 500 kOhms. A reading of less than 500 kOhms indicates deterioration of the winding insulation and possible current flow to ground.

6.4 Main Field (Rotor)

The two-pole rotor creates the magnetic field needed to produce alternating current in the stator windings. Before testing, inspect the rotor for visible damage to pole shoes, insulation, exposed coil windings, and slip ring surfaces. Rotate the bearing to check for wear, heat discoloration, or noise.

⚠ WARNING	**Accidental starting.** **Can cause severe injury or death.** Disconnect the battery cables before working on the generator set. Remove the negative (–) lead first when disconnecting the battery. Reconnect the negative (–) lead last when reconnecting the battery.
	

Disabling the generator set. Accidental starting can cause severe injury or death. Before working on the generator set or equipment connected to the set, disable the generator set as follows: (1) Press the generator set off/reset button to shut down the generator set. (2) Disconnect the power to the battery charger, if equipped. (3) Remove the battery cables, negative (–) lead first. Reconnect the negative (–) lead last when reconnecting the battery. Follow these precautions to prevent the starting of the generator set by the remote start/stop switch.

High voltage test. Hazardous voltage will cause severe injury or death. Follow the instructions of the test equipment manufacturer when performing high-voltage tests on the rotor or stator. An improper test procedure can damage equipment or lead to generator set failure.

Grounding electrical equipment. Hazardous voltage will cause severe injury or death. Electrocution is possible whenever electricity is present. Ensure you comply with all applicable codes and standards. Electrically ground the generator set, transfer switch, and related equipment and electrical circuits. Turn off the main circuit breakers of all power sources before servicing the equipment. Never contact electrical leads or appliances when standing in water or on wet ground because these conditions increase the risk of electrocution.

Rotor Test Procedure

1. Press the OFF button on the controller to turn off the generator set.
2. Disconnect utility power to the generator set.
3. Disconnect the generator set engine starting battery, negative (-) lead first.
4. Check the rotor for continuity and resistance.
   a. Raise and secure the brushes away from the slip rings by removing the two brush holder mounting screws and moving the brush assembly out of the way. See the Brush Assembly figure.
   b. Measure the rotor resistance (ohms) between the two slip rings; see Figure 67. If necessary, clean the slip rings to allow good contact with the meter leads. See the Slip Rings section for cleaning instructions. See the Alternator Specifications section for rotor resistance readings.

      Note:
      Because ohmmeter accuracy varies, resistance readings are approximate. Take readings at room temperature.

   c. If the resistance readings are low, perform a megohmmeter test on rotor as described in the next step.

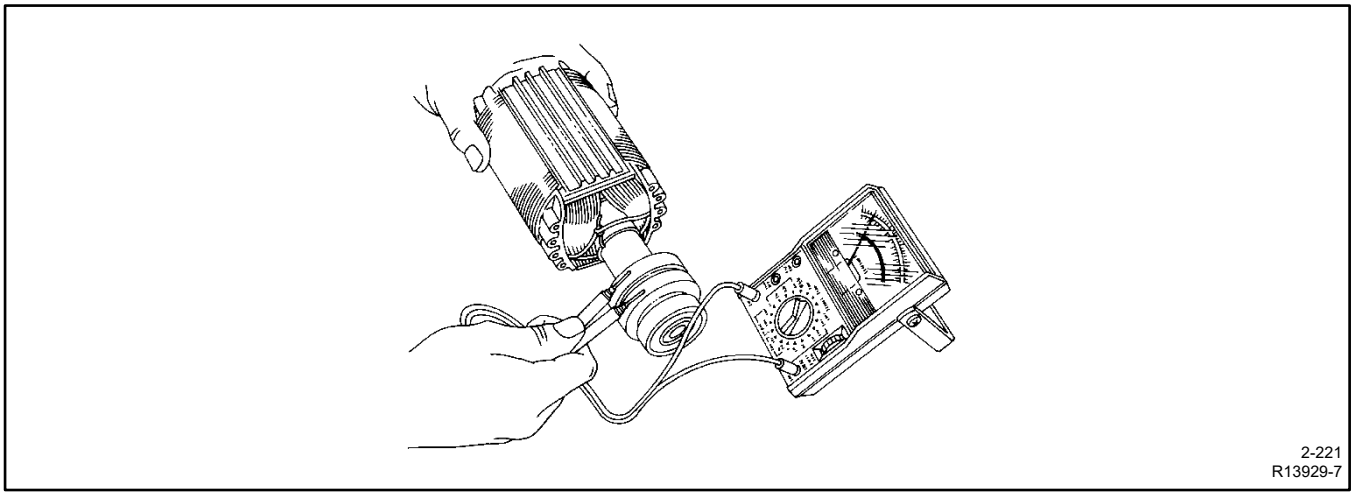

Figure 67 Rotor Resistance Check

5. Perform a megohmmeter test to determine whether the rotor is shorted to ground.
   a. Raise and secure the brushes away from the slip rings by removing the two brush holder mounting screws and moving the brush assembly out of the way.
   b. Using a megohmmeter, apply 500 volts DC to one rotor slip ring and the rotor poles or shaft. Follow the instructions of the megohmmeter manufacturer when performing this test.

      Note:
      A reading of approximately 500 kOhms (1/2 megohm) or higher indicates a good rotor.

   c. Repair or replace the rotor if the reading is less than approximately 500 kOhms. A reading of less than 500 kOhms indicates deterioration of the winding insulation and possible current flow to ground.
   d. Following the test, reinstall the brush assembly and check the brush positions on the slip rings. See the Brushes section.

The generator set may be equipped with an optional brush cover. See Figure 68.

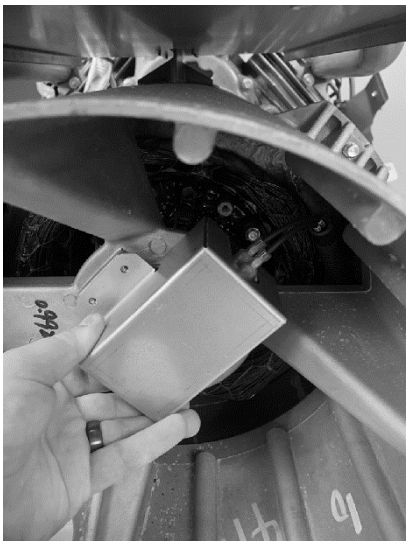

IMG_1055

Figure 68 Optional Brush Cover 14/20RCA(L) Models Only

6.5 Slip Rings

Slip rings acquire a glossy brown finish in normal operation. Do not attempt to maintain a bright, newly-machined appearance on the slip rings. Cleaning with a dry, lint-free cloth is usually sufficient. Use very fine sandpaper (#00) and apply light pressure to remove roughness. Do not use emery or carborundum paper or cloth. Clean all carbon dust from the generator after sanding the slip rings. If the rings are black or pitted, remove the rotor and use a lathe to remove some of the slip ring surface material.

For 26RCA(L) models: Remove the fan to access the brushes. Follow the steps below.

1. Remove nine screws and collect the scroll cover.

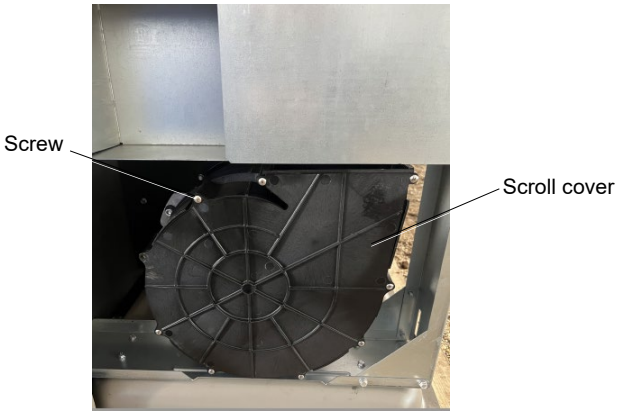

2. Remove four screws (M6) from the fan using an impact wrench. Remove fan from the alternator scroll.

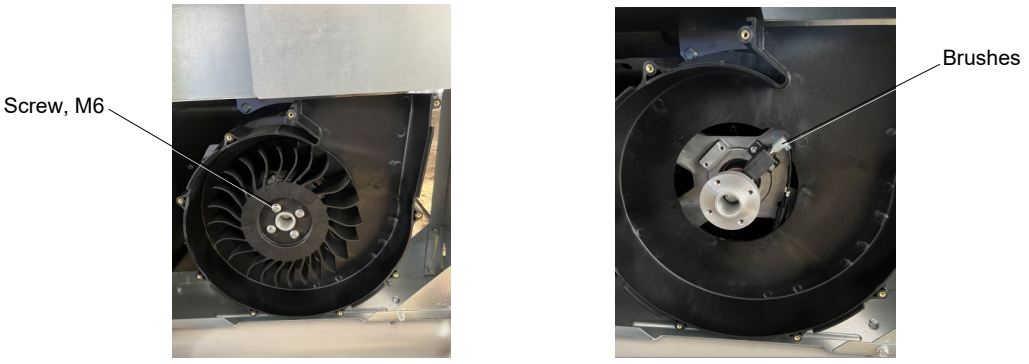

Note:
Add Blue Loctite 242 or equivalent to fan screws before reinstalling them in fan spacer.
When installing the fan, tighten the screws (M6) to 10.9 Nm (8.0 ft.lb.).

6.6 Brushes

The brushes transfer current to the slip rings. The brushes should last the life of the generator. However, abrasive dust on the slip ring can shorten the life of the brushes.

Excessive arcing at the brushes could damage the controller. Weak springs, damaged slip rings, sticking brushes, a loose brush holder, or poor brush contact causes arcing.

The brush holder assembly is illustrated in Figure 70. The brushes must be free to move within the holder and be held in contact with the slip rings by the springs. When correctly positioned, spring pressure on the brush surface causes the brush to wear evenly. The entire brush must ride on the ring or arcing occurs and causes burned rings or voltage regulator failure. Figure 69 shows the correct positioning of the brushes. Add or remove shims as necessary to center the brushes on the slip rings. Replace the brushes if they show uneven wear or are worn to one half their original length.

Check the resistance through the brushes. Resistance through the brushes should be low, 0.1-0.2 ohms without meter lead resistance.

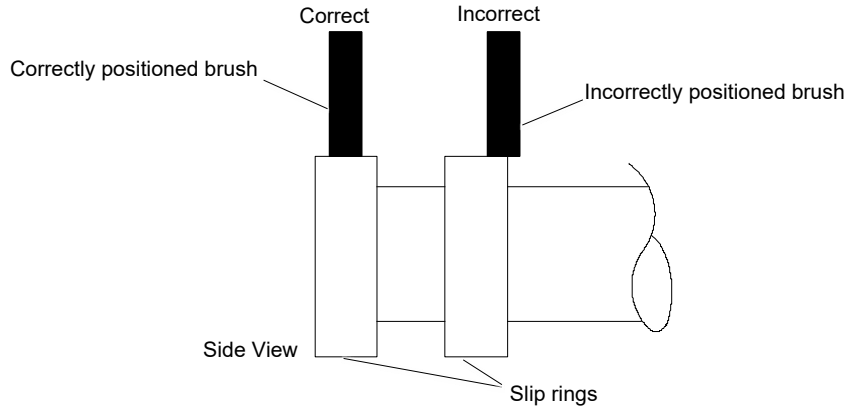

Figure 69 Brush Position

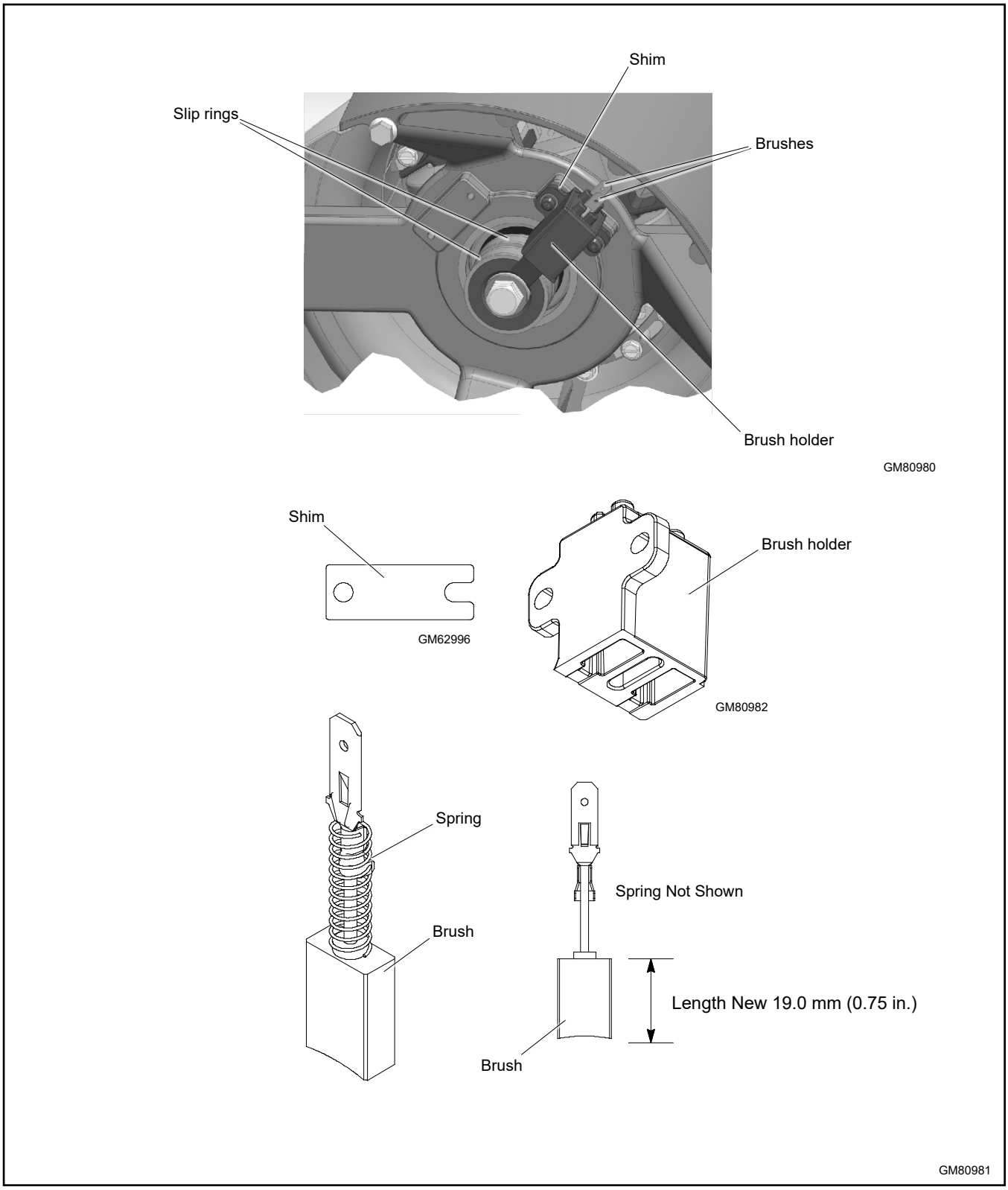

Figure 70 Brush Assembly

6.7 Voltage Adjustments

DANGER	
	**Hazardous voltage. Moving parts.** **Will cause severe injury or death.** Operate the generator set only when all guards and electrical enclosures are in place.

Testing live electrical circuits. Hazardous voltage or current will cause severe injury or death. Have trained and qualified personnel take diagnostic measurements of live circuits. Use adequately rated test equipment with electrically insulated probes and follow the instructions of the test equipment manufacturer when performing voltage tests. Observe the following precautions when performing voltage tests: (1) Remove all jewelry. (2) Stand on a dry, approved electrically insulated mat. (3) Do not touch the enclosure or components inside the enclosure. (4) Be prepared for the system to operate automatically. *(600 volts and under)*

Short circuits. Hazardous voltage/current will cause severe injury or death. Short circuits can cause bodily injury and/or equipment damage. Do not contact electrical connections with tools or jewelry while making adjustments or repairs. Remove all jewelry before servicing the equipment.

Note:
See the Voltage Calibration section for voltage calibration instructions.

Voltage Adjustments Using SiteTech

The SiteTech parameters used to adjust the voltage are shown in Figure 71.

SiteTech Group	Parameter
Genset System Configuration	Genset System Voltage
Voltage Regulator	Average Voltage Adjustment
	Volts per Hertz Slope
	Volts per Hertz Cut-in Frequency
	Voltage Regulator Gain

Figure 71 SiteTech Parameters for Voltage

6.7.1 Voltage Regulator Average Voltage Adjustment

Voltage regulation is performed by the controller. The controller monitors generator output voltage and adjusts the excitation current to the rotor.

Excitation current control is performed by the patented Kohler Hybrid Voltage Regulator. This regulator consists of a fast-reacting analog inner loop and a slower digital outer loop. The inner loop regulates the average output voltage to a setpoint which is controlled by the outer loop, allowing the voltage to recover very quickly during transient conditions. The outer loop measures the RMS magnitude of the voltage and adjusts the setpoint for the inner loop until the RMS voltage amplitude matches the Voltage Regulator Average Voltage Adjustment setpoint.

The hybrid regulator should require no voltage adjustment, as it regulates the RMS output voltage to the configured output voltage. The Voltage Regulator Average Voltage Adjustment setpoint may require alteration to more closely match the utility voltage at a particular location or to compensate for voltage drop on wiring between the generator and the ATS.

The Voltage Regulator Average Voltage Adjustment can be adjusted from the Genset System menu on the RDC2 controller, or adjusted using SiteTech. See the SiteTech Parameters for Voltage figure and Figure 72.

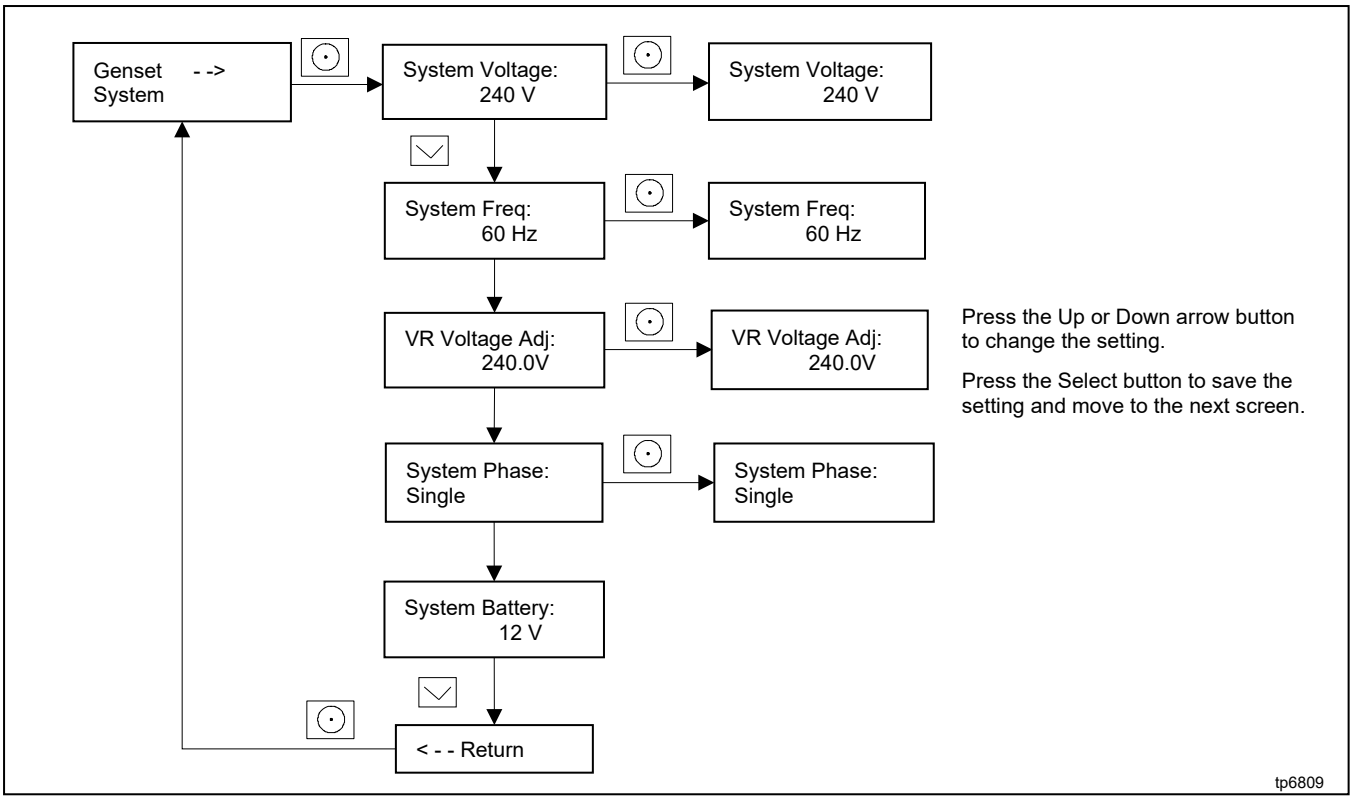

Figure 72 Voltage Regulator Voltage Adjustment Using RDC2 Controller Menus and Keypad

6.7.2 Volts/Hz Slope and Cut-In Frequency

The Volts/Hz setting for the voltage regulator performs the following functions on the generator:

- Serves as a method for unloading the engine to allow recovery during a sharp increase in load
- Serves as a means of protection for the alternator to avoid saturating the field (rotor heating) at low frequencies

The slope and cut-in frequency of the volts/Hz curve are set at the factory to allow the generator to meet factory performance standards. They should not be adjusted except under unique circumstances and under direction from a factory representative.

If the slope of the Volts/Hz curve is set too low, the engine will not be unloaded quickly enough to recover from a quick load increase. If the slope is set too high, the voltage will dip dramatically with a quick load increase, which will cause temporary brownouts.

The cut-in frequency is typically set to 1 Hz below system frequency so that normally small frequency variations do not cause the voltage to vary. Setting the cut-in frequency further from rated frequency may adversely affect the generator's ability to recover frequency after a sharp load increase.

See Figure 73 for an illustration of the volts/Hz curves for 50 and 60 Hz.

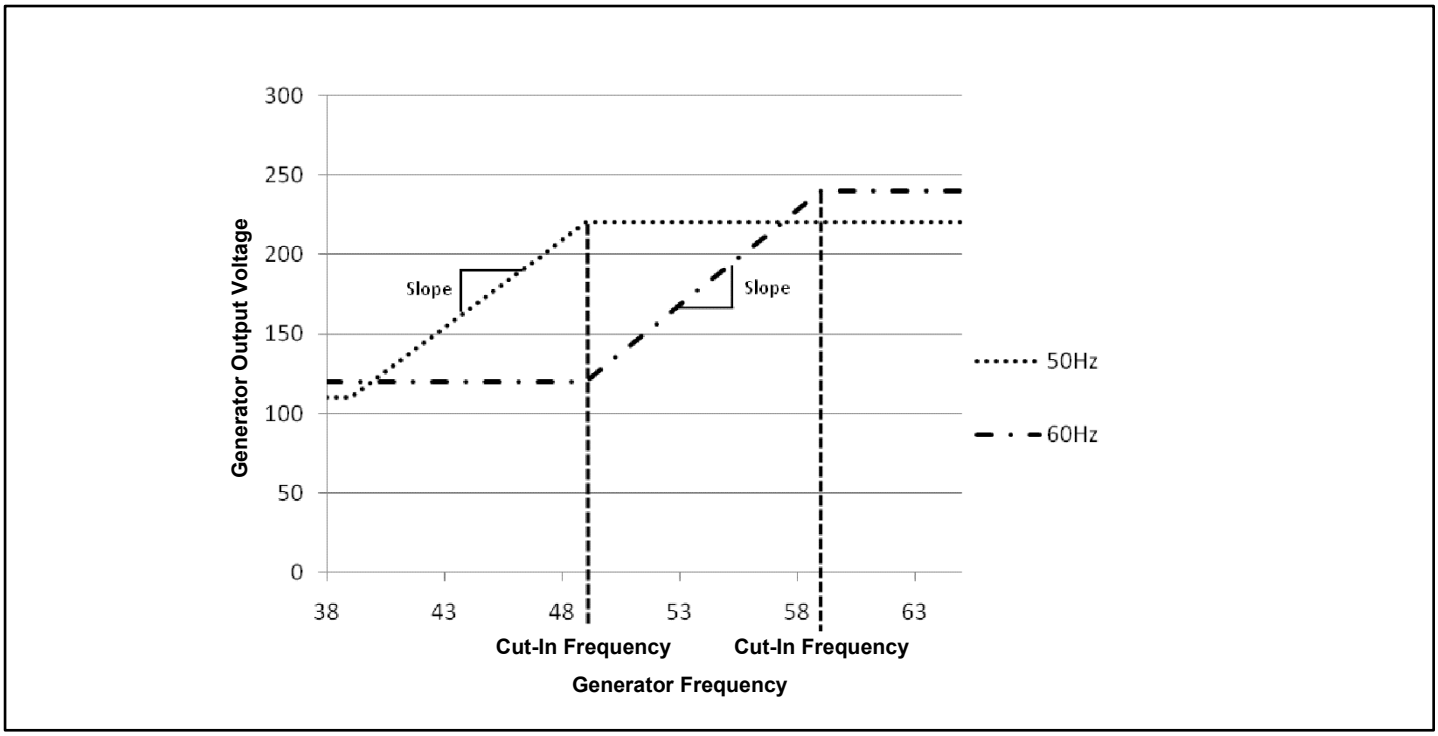

Figure 73 Volts/Hz Curves

6.7.3 Voltage Regulator Gain

The gain of the inner loop of the hybrid regulator is set at the factory and is not adjustable in the field. The Voltage Regulator Gain listed in SiteTech is for the outer loop. The outer loop is responsible for correcting the setpoint to the inner loop to ensure that the generator output is regulated to the RMS regulator setpoint. The outer loop thus corrects for wave-shape distortion, temperature variations in the inner loop circuitry, inter-board metering variations, etc. Typically, the outer loop only adjusts the setpoint to the inner loop on initial startup (battery is first plugged in) and after calibration has changed.

At a gain setting of 1, it will take 128 seconds to adjust the voltage output 1%. At a gain setting of 255, the voltage adjustment rate is related to the difference between the target voltage and the measured voltage, but could vary up to 3.1% per second.

At lower gains, the voltage may reach the target value very slowly, but the chance of overshoot from the two controller loops fighting is minimal. At higher gains, there is a chance that the outer loop will change the setpoint faster than the inner loop can accommodate, resulting in unstable output voltage. This may show up as slight flicker on a light bulb.

Note:
The RMS correction outer loop is not active when the controller is in Volts/Hz mode; the last known correction factor, or inner loop setpoint, is used.

6.8 Governor System

The governor system consists of an electromechanical stepper motor (actuator) and an engine speed detection/feedback circuit. The RDC2 controller controls the governor system operation. See the Wiring Diagrams section for the governor connections.

6.8.1 Operation

The frequency of the alternator output is determined by the speed of the engine. A two-pole alternator is driven at 3600 rpm to provide 60 Hertz. (A 50 Hz model is driven at 3000 rpm.) The engine speed is maintained by an electronic governor system that consists of an embedded controller and electric actuator (stepper motor).

The governor system is controlled by the generator set controller. The controller provides regulated power to the bidirectional stepper motor actuator, which is linked to the carburetor throttle arm.

The engine runs at a reduced speed during the warmup and cooldown idle period of the cycle exercise. During this time, the rotor field is not energized and the generator will not produce voltage. When not producing voltage, the generator will not be subject to large changes in engine loading, so the governor response is dramatically slowed to decrease throttle linkage wear and fuel consumption. The response is also slowed during cooldown and fault cooldown for the same reason.

The engine speed adjustment setting in SiteTech allows adjustment of the engine speed for testing purposes. See the Engine Speed Adjustment for Governor section. If the engine is hunting or surging, do not adjust the engine speed. Test the governor operation as described in the Hunting/Surging and the Governor System Operation Test sections. Then adjust the governor gain to stabilize the engine operation if necessary before adjusting the speed. See the Engine Speed Gain Adjustment for the Governor section.

6.8.2 Initial Checks

The factory sets the electronic governor. Under normal circumstances the electronic governor requires no further adjustment. Verify that the governor stepper motor moves smoothly and steadily during operation. If the engine operates erratically, check the following connections and conditions before adjusting the governor.

WARNING	**Accidental starting.** **Can cause severe injury or death.** Disconnect the battery cables before working on the generator set. Remove the negative (–) lead first when disconnecting the battery. Reconnect the negative (–) lead last when reconnecting the battery.
	

Disabling the generator set. Accidental starting can cause severe injury or death. Before working on the generator set or equipment connected to the set, disable the generator set as follows: (1) Press the generator set off/reset button to shut down the generator set. (2) Disconnect the power to the battery charger, if equipped. (3) Remove the battery cables, negative (–) lead first. Reconnect the negative (–) lead last when reconnecting the battery. Follow these precautions to prevent the starting of the generator set by the remote start/stop switch.

- Verify that the electrical connections are clean and tight.
- Verify that the battery connections are clean and tight.
- Check for a loose or worn stepper motor/throttle shaft coupling. Replace the shaft and bushing every 500 hours of engine operation.
- Check the carburetor for dirt, grime, or misadjustment. Check for a loose mixer assembly.
- Check the throttle linkage for any binding, dirt, damage, or other visible problems.
- Check the fuel supply pressure and the fuel supply system for leaks, blockages, and/or failed system components (regulators, valves, etc.). See the Fuel Systems section.

DANGER	**Hazardous voltage. Moving parts.** **Will cause severe injury or death.** Operate the generator set only when all guards and electrical enclosures are in place.
	

- Observe the stepper motor operation.
  - The stepper motor should open the throttle while cranking, and pull back after speed feedback is detected.
  - Check that the stepper motor actuator arm has not dropped to the 6 o'clock position. Normal operation range is from the 10 o'clock to the 2 o'clock position.
- Check for electronic governor faults. The fuel shutoff solenoid deenergizes and the generator set shuts down under the following conditions:
  - Closed throttle
  - Engine overspeed
  - Broken fuel shutoff solenoid lead
  - Broken stepper motor leads (erratic performance)
  - Failed actuator linkage (erratic performance)

6.8.3 Hunting/Surging

Hunting/surging problems thought to be caused by the governor system are more likely to be caused by fuel supply, engine, or carburetor problems. Check engine speed stability using the following procedure before testing the governor.

Also see the Troubleshooting Engine Hunting, 20/26RCA(L) Models section.

DANGER	**Hazardous voltage. Moving parts.** **Will cause severe injury or death.** Operate the generator set only when all guards and electrical enclosures are in place.
	

WARNING	**Hot engine and exhaust system.** **Can cause severe injury or death.** Do not work on the generator set until it cools.
	

Servicing the exhaust system. Hot parts can cause severe injury or death. Do not touch hot engine parts. The engine and exhaust system components become extremely hot during operation.

1. Open the generator set line circuit breaker.
2. Start the generator set.
3. Hold the throttle linkage steady while the engine is running. See Figure 74. If the engine runs at a steady speed with no hunting or surging when the throttle is held steady, then the hunting/surging problems during operation are probably caused by the governor. Proceed to the Governor System Operation Test section.
4. Check the linkage between the stepper motor and the carburetor. Replace any worn or damaged components.
5. Verify that the speed control parameters have not been modified. Reset the parameters to the default settings if they have been modified. See the Engine Speed and Frequency Parameters in SiteTech figure.
6. If the engine speed hunts or surges while the throttle is held steady, check the carburetor and engine operation. Refer to the engine service manual for engine diagnostic and service information.

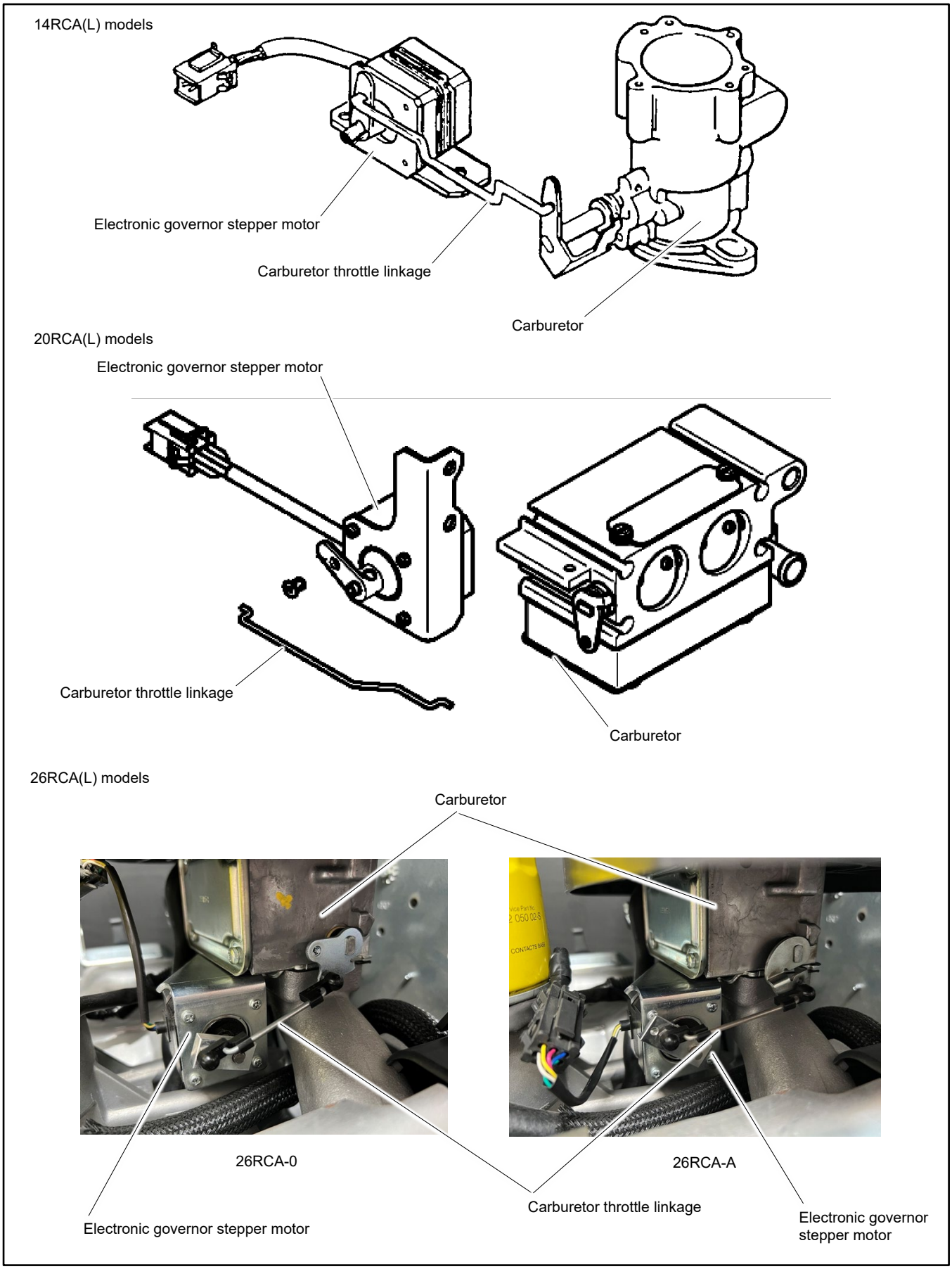

Figure 74 Stepper Motor and Carburetor

6.8.4 Governor System Operation Test

If the engine continues to operate erratically after the previous checks, test the governor system operation using the following procedure. The procedure is summarized in the flowchart in Figure 75.

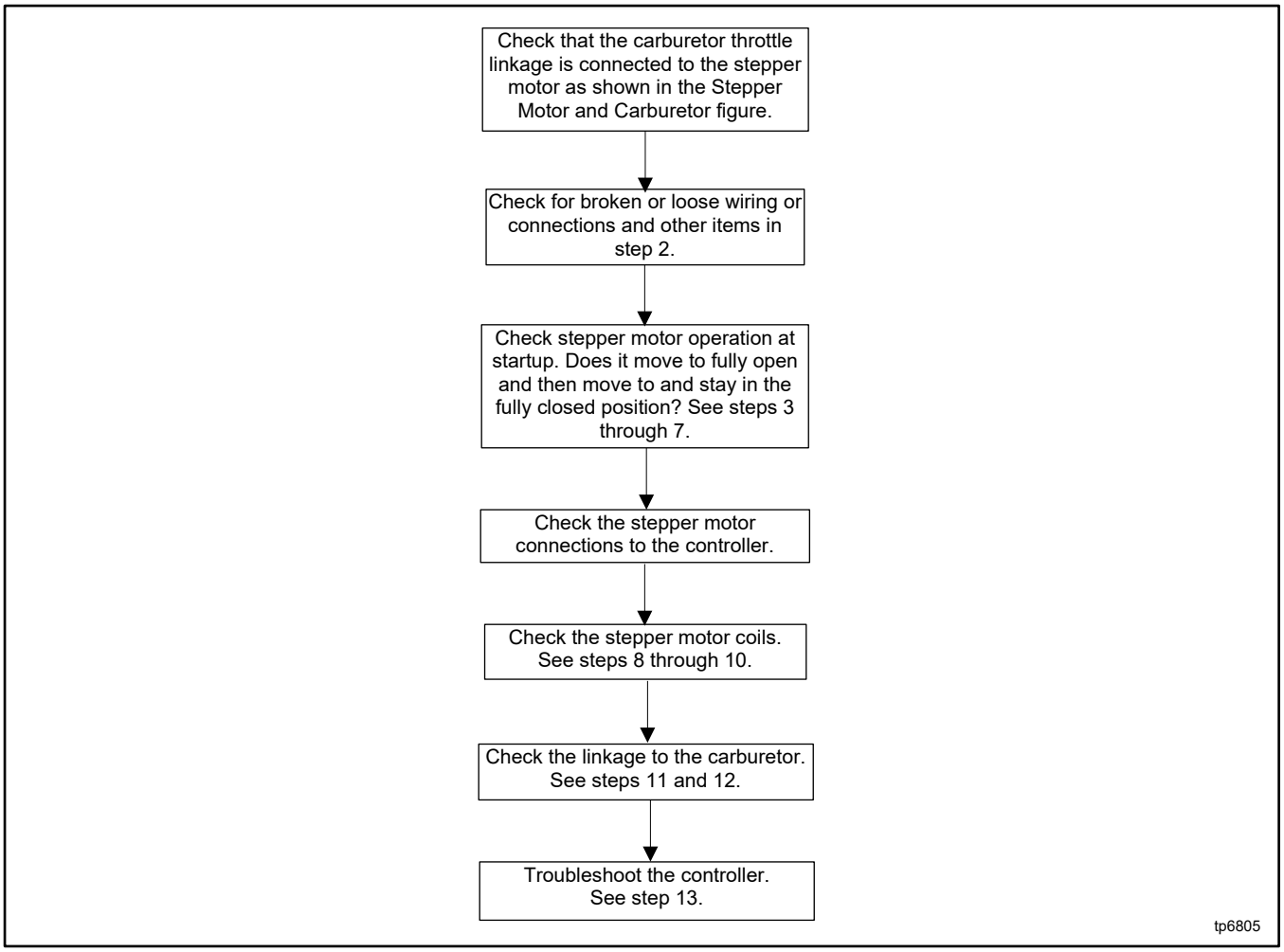

Figure 75 Governor System Operation Test Procedure Summary

Governor System Operation Test Procedure

DANGER 	**Hazardous voltage. Moving parts.** **Will cause severe injury or death.** Operate the generator set only when all guards and electrical enclosures are in place.

1. Verify that the carburetor throttle linkage is connected to the stepper motor as shown in the Stepper Motor and Carburetor figure.
2. Look for broken or loose wiring or plug connections if the stepper motor moves erratically. Check the condition of the throttle linkage, and verify that the throttle plate closes completely.

Check the operation of the stepper motor at startup.

3. Before starting the generator, move the throttle to the fully closed position. Press the RUN button to initiate the start sequence.
4. If the throttle stays in the fully closed position, and the controller shows a Locked Rotor fault, verify that the generator set model is set to 14 kW or 20 kW. Then check and verify the alternator connections, functionality, and operation. See the wiring diagrams and the Alternator Excitation section through the Brushes section of this document.
5. If the throttle moves to the fully open position and remains fully open, and the controller shuts down the generator for an overspeed or overfrequency fault, verify that the generator set model is set to 14 kW or 20 kW. Then check the throttle linkage and stepper motor connections and operation. Go to step 8 of this procedure.
6. If the throttle moves to the fully open position and remains fully open, the engine goes to a high speed condition, and the controller does not shut down the generator, verify that the generator set model is set to 14 kW or 20 kW. Then check and verify the alternator connections, functionality, and operation. See the wiring diagrams and the Alternator Excitation section through the Brushes section of this document.
7. If the throttle moves to the fully open position and then moves toward the closed position, but the engine speed is erratic or behaves poorly, check the throttle linkage and stepper motor connections and operation. See stepper motor troubleshooting starting with step 8 of this procedure. Also check that the engine speed control parameters are set to the default settings (Engine Speed Governor and Advanced Speed Control parameters in SiteTech).

Check the stepper motor, carburetor, and linkage.

8. To test controller's governing function, open the generator set circuit breaker, disconnect the engine starting battery, and shut off the fuel supply.
9. Disconnect the stepper motor plug P6 to access the stepper motor terminals.
10. Check the stepper motor coil resistance across pins 2 and 3 and across pins 1 and 4. Only two stepper motor leads of each coil group are used (BLK-YEL and RED-WHT). See Figure 76. The resistance per half coil is 38.5 ohms. If one of the coils has a significantly higher resistance or is shorted, replace the stepper motor.

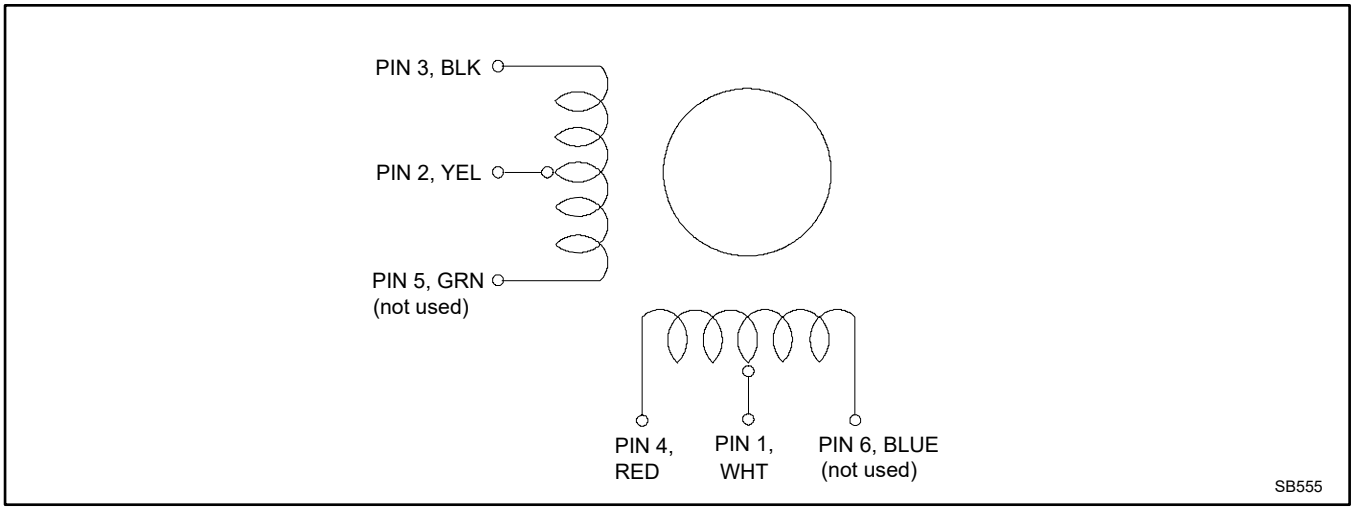

Figure 76 Actuator Coil Group

11. Inspect the linkage and the bushings between the stepper motor and the carburetor for damage. Replace as necessary.
12. Disconnect the linkage between the stepper motor and the carburetor. Verify free, full range of motion for the stepper motor and the carburetor throttle plate. Replace as necessary.
13. If there is power and a good ground connection to the controller and the stepper motor, and the carburetor and linkage pass the checks of steps 10 through 12, the problem is with the controller. Check controller connections, wiring, and settings. Refer to the troubleshooting procedures in the Troubleshooting section.

6.9 Frequency Adjustment

The engine speed determines the generator output frequency; 60 Hz units operate at 3600 RPM and 50 Hz units run at 3000 RPM. When the system frequency setting on the controller is changed, the engine run speed will automatically update.

Set the system frequency to 50 or 60 Hz before adjusting the engine speed. The system frequency can be adjusted using the controller keypad on the RDC2 controller or using a personal computer running SiteTech™ software.

Frequency Adjustment Procedure

1. Use the RDC2 controller's Genset System menu or use SiteTech to set the system frequency to 50 or 60 Hz.

   Note:
   Although the RDC2 System Frequency menu scrolls through numbers from 51-59, the only available settings are 50 and 60 Hz.

2. Open the generator set line circuit breaker.
3. Attach a frequency meter to the AC output leads.
4. Start and run the generator set. Verify that the output frequency matches the desired system frequency.
5. Check stability with the generator set running and with no load applied. If the generator set speed is unstable, hunts, or surges, use SiteTech to verify that the engine speed control parameters are set to the default settings (Engine Speed Governor settings in SiteTech).

   Note:
   Hunting/surging problems thought to be caused by the governor are more likely to be caused by fuel supply, engine or carburetor problems. If the generator set speed is unstable, hunts, or surges, check for the cause using the procedure in the Troubleshooting Engine Hunting, 20RCA(L) Models section before proceeding.

6. Apply rated load to the generator set and observe the frequency reading. The no load and full load frequency should not vary more than 0.4 Hz from the rated generator frequency.
   a. If the frequency varies significantly more than 0.4 Hz from the system frequency, check that the carburetor throttle plate opens completely without sticking and check the carburetor adjustment.
   b. If the frequency is steady but running below rated frequency, verify that the throttle is completely open. If so, reduce the load on the engine until the frequency recovers.
7. Check for hunting and surging at full load. If the generator speed is unstable, hunts, or surges, the governor gain may require adjustment. See the Engine Speed Gain Adjustment for the Governor section, for instructions to change the governor gain.
8. Remove the load and observe the frequency. The frequency should return to the rated level within a few seconds. If the speed does not recover or the generator controller shuts down for over frequency or overspeed, it may be necessary to adjust the governor gain. See the Engine Speed Gain Adjustment for the Governor section.

6.9.1 Engine Speed Gain Adjustment for the Governor

Note:
Adjusting the governor gain may cause the generator to operate incorrectly.

Note:
Typical governor gain settings are between 35 and 65. Settings outside this range are not recommended for extended use (troubleshooting only).

The governor gain controls how much throttle movement is tied to a given change in the generator speed. Higher gains make the throttle move more aggressively on a speed change, lower gains make the throttle move more slowly.

Using SiteTech, adjust the Engine Speed Gain Adjustment setting in the Engine Speed Governor group. Change the governor gain setting in small steps (5 or less).

- If the engine is hunting slowly (changes from maximum to minimum speed in more than a second), increase the governor gain.
- If the generator is hunting quickly (maximum to minimum speed several times per second), decrease the gain.
- If changing the gain makes the hunting worse, try changing the gain in the other direction.

6.9.2 Engine Speed Adjustment for Governor

The Engine Speed Adjustment parameter in the Engine Speed Governor group in SiteTech can be adjusted while the generator set is running.

Note:
The Engine Speed Adjustment parameter must be left at the default value (50) for the generator to operate at the correct frequency. If this parameter is changed during troubleshooting and testing, make sure to return it to the default setting before disconnecting SiteTech from the generator controller.

The Engine Speed Adjustment setting can be adjusted from 0 to 99 for test purposes. Setting the Engine Speed Adjustment to 0 will make the governor regulate speed to 100 RPM slower than the rated speed. Setting the Engine Speed Adjustment to 99 will make the governor regulate speed to 98 RPM faster than the rated speed setting.

Changing the Engine Speed Adjustment setting will change the engine speed according to the following formula:

$$(\text{System Frequency} \times 60) + ((\text{Setting} - 50) \times 2) = \text{RPM}$$

Examples:

System frequency of 60 Hz, changing the setting to 40:

$$(60 \times 60) + ((40 - 50) \times 2) = 3580\,RPM$$

System frequency of 50 Hz, changing the setting to 99:

$$(50 \times 60) + ((99 - 50) \times 2) = 3098\,RPM$$

6.9.3 Advanced Speed Control

Note:
Do not adjust the Advanced Speed Control settings unless instructed to do so by the Kohler Generator Service Department.

The four parameters under Advanced Speed Control also permit adjustment of the governor function, but have the potential of dramatically affecting the load transient performance of the generator. They are set in the factory and are tested to comply with factory performance standards. See the Controller Parameters section for the default settings. Do not change these settings unless directed by factory personnel.

SiteTech Group	Parameter	Units	Adjustment Range	Default Setting
Engine Speed Governor	Engine Speed Adjustment		0-99	50
Engine Speed Governor	Engine Speed Gain Adjustment		35-65	50
Genset Personality Profile	Engine Run Speed †	RPM	1000-3900	3600
Genset System configuration	Genset System Frequency	Hz	50/60	60.0
† Engine Run Speed is set automatically when the System Frequency is set.				

Figure 77 Engine Speed and Frequency Parameters in SiteTech

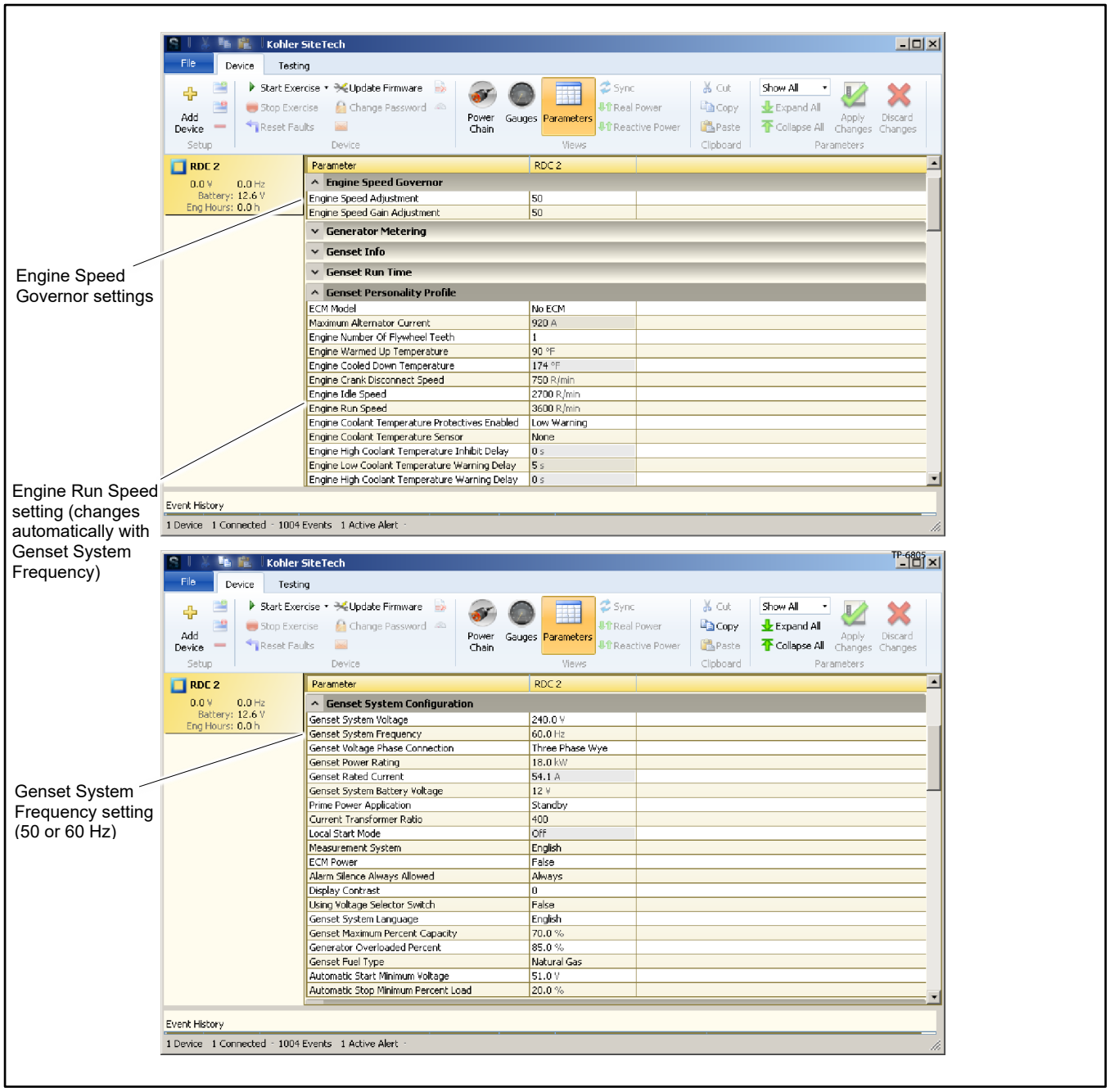

Figure 78 Engine Speed and Frequency Parameters in SiteTech

6.10 Fault Shutdown Tests

Verify the operation of the generator set overspeed, overcrank, and low oil pressure shutdowns by performing the tests in the Controller Fault Shutdown Functions section. If these tests are inconclusive, test individual shutdown circuit components (wiring harness, switch, etc.) as described in the Fault Shutdown Switches section.

DANGER	**Hazardous voltage. Moving parts.** **Will cause severe injury or death.** Operate the generator set only when all guards and electrical enclosures are in place.
	

Short circuits. Hazardous voltage/current will cause severe injury or death. Short circuits can cause bodily injury and/or equipment damage. Do not contact electrical connections with tools or jewelry while making adjustments or repairs. Remove all jewelry before servicing the equipment.

WARNING	**Hot engine and exhaust system.** **Can cause severe injury or death.** Do not work on the generator set until it cools.
	

Servicing the exhaust system. Hot parts can cause severe injury or death. Do not touch hot engine parts. The engine and exhaust system components become extremely hot during operation.

6.10.1 Controller Fault Shutdown Functions

Check the operation of the fault functions programmed in the controller by performing the following tests. If the controller does not operate as described, check the controller settings. Also check the controller wiring and connections.

Verify that the controller parameters shown in Figure 79 are set correctly for your unit.

Open the generator set output circuit breaker before beginning the test. (See the Service Views, 14/20RCA(L) figure for the circuit breaker location.)

Parameter	Setting
Genset Model Number*	14 kW 20 kW 26 kW
Genset Serial Number*	From nameplate; see the Controller, Utility Power Connection, and Nameplate Locations figure.
Fuel Type†	Natural Gas or Liquid Propane (LPG)
Phase Connection†	Single Phase
Genset System Voltage†	From nameplate; see the Controller, Utility Power Connection, and Nameplate Locations figure.
Genset System Frequency†	50 or 60 Hz
* In the Generator Set Information menu. † In the Genset System menu. Fuel Type is available with firmware version 4.5 or higher.	

Figure 79 Controller Settings

Overspeed Shutdown

Connect a digital voltmeter (DVM) to measure the output frequency. Start the generator set and manually adjust the engine speed by moving the throttle linkage.

Note:
Be careful not to touch the hot silencer when reaching in to adjust the throttle linkage.

Increase the engine speed to at least 115% of the rated engine speed, 69 Hz on 60 Hz models or 58 Hz on 50 Hz models. Verify that the generator set shuts down on an overspeed fault. If the overspeed shutdown does not operate, the generator set should shut down on an overfrequency fault after approximately 5 seconds.

Low Oil Pressure (LOP) Shutdown

Connect a jumper wire from the LOP switch (lead 13) to the generator set ground. Start the generator set. Verify that the generator set shuts down after approximately 25-35 seconds of operation. Remove the jumper wire from the LOP switch and ground. Start the generator set and run it for at least 25-35 seconds to verify that the generator set does not shut down.

Note:

The LOP shutdown feature does not protect against damage caused by operating when the oil level is low; it is not a low oil level shutdown. Check the oil level regularly, and add oil as needed.

Low Oil Level (LOL) Shutdown (26RCA(L) only)

Connect a jumper wire from the LOL switch (lead 13A) to the generator set ground. Start the generator set. Verify that the generator set shuts down after approximately 25-35 seconds of operation. Remove the jumper wire from the LOL switch and ground. Start the generator set and run it for at least 25-35 seconds to verify that the generator set does not shut down.

Overcrank Shutdown

Disconnect the fuel solenoid valve. Press the RUN button on the controller. Observe that the generator set cranks for 15 seconds and then rests for 15 seconds.

- 14RCA(L) Models: Check that the generator set shuts down after the third crank/rest cycle.
- 20RCA(L) Models: The generator set cranks three times as described above, pauses for 45 seconds, and then cranks three more times before shutting down on an Overcrank Shutdown fault.

Underspeed and Underfrequency Shutdowns

Close the throttle while the generator is running. The engine speed should decrease until the generator set shuts down and the controller indicates an Engine Speed Low Shutdown.

To check the underfrequency shutdown, use very small movements over a longer period of time to close the throttle. The genset may need to run at reduced frequency for about a minute before the Frequency Low Shutdown is triggered.

Locked Rotor Shutdown

Remove the connector from the starter relay (see the Relay Location figure). Press RUN. Verify that the engine does not turn and the controller indicates a Locked Rotor fault.

High Engine Temperature Shutdown

Note:
Testing the high engine temperature shutdown requires connecting a jumper wire across the temperature sensor connections. Because the temperature sensor can be difficult to reach, the jumper can be placed across pins 9 and 10 on connector P1 at the generator set controller, if desired.

Disconnect the harness (connector P7) at the oil temperature sensor (OTS). See Figure 80 for the temperature sensor location, or see the note above. Connect a jumper wire across the temperature sensor connections in connector P7 or connections P1-9 and P1-10 on the controller. See Figure 81. Press RUN to start the generator set. After 5 seconds, verify that the controller displays a high lube oil temperature fault. If the oil temperature remains high (jumper connected) without increasing, the generator set will run for 5 minutes in engine cooldown mode.

Press the OFF button on the controller and remove the jumper wire. Start the generator set and verify that the generator set does not enter the engine cooldown cycle or shut down on a high temperature fault. Reconnect P7 to the temperature sensor.

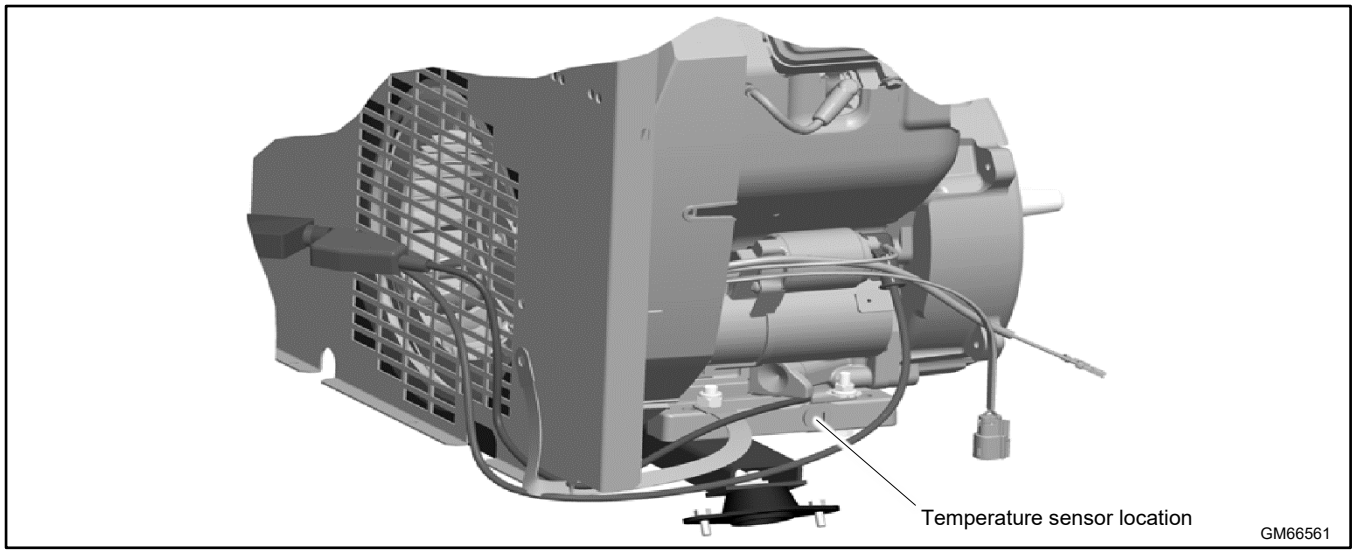

Figure 80 Temperature Sensor (OTS) Location

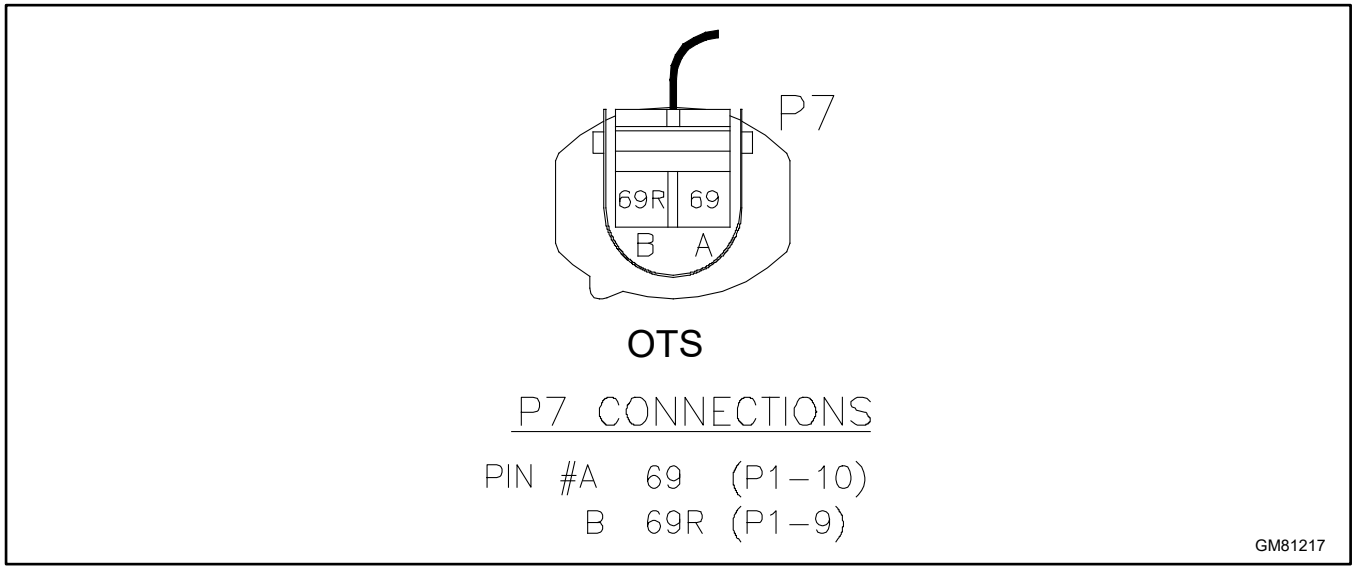

Figure 81 Temperature Sensor (OTS) Connector P7

6.10.2 Fault Shutdown Switches

Check the low oil pressure and high engine temperature shutdown switches on the engine by performing the following tests. If the sensor does not function as described, replace it.

DANGER 	**Hazardous voltage. Moving parts.** **Will cause severe injury or death.** Operate the generator set only when all guards and electrical enclosures are in place.

Servicing the generator set when it is operating. Exposed moving parts will cause severe injury or death. Keep hands, feet, hair, clothing, and test leads away from the belts and pulleys when the generator set is running. Replace guards, screens, and covers before operating the generator set.

Short circuits. Hazardous voltage/current will cause severe injury or death. Short circuits can cause bodily injury and/or equipment damage. Do not contact electrical connections with tools or jewelry while making adjustments or repairs. Remove all jewelry before servicing the equipment.

Temperature Sensor (OTS)

The temperature sensor (labelled OTS on the wiring diagram and schematic drawing) is used to monitor engine temperature for the high engine temperature fault shutdown. See the Temperature Sensor (OTS) Location figure for the temperature sensor location. Press the OFF button on the controller to stop the generator set and allow the generator set to cool. Disconnect the temperature sensor (or see the note, below) and use an ohmmeter to measure the resistance across the sensor. The sensor resistance varies with temperature and should be within the values shown in Figure 82. If the resistance is very low (indicating a short circuit) or very high (indicating an open circuit), replace the CTS.

Note:
Because the temperature sensor can be difficult to reach, the resistance can be measured across pins 9 and 10 on connector P1 at the generator set controller, if desired. Disconnect P1 from the controller before checking the resistance across P1-9 and P1-10.

Note:
The temperature sensor is located in the engine oil pan. Drain the engine oil before removing the switch.

Temperature, °C (°F)	Resistance, Ohms
30 (86)	2100-2400
100 (212)	180-200

Figure 82 Temperature Sensor OTS Resistance Readings

Low Oil Pressure (LOP) Switch

The low oil pressure (LOP) switch is located under the engine air cleaner. See Figure 83. The oil pressure switch should be grounded when the engine is stopped (no oil pressure) and open when the engine is running.

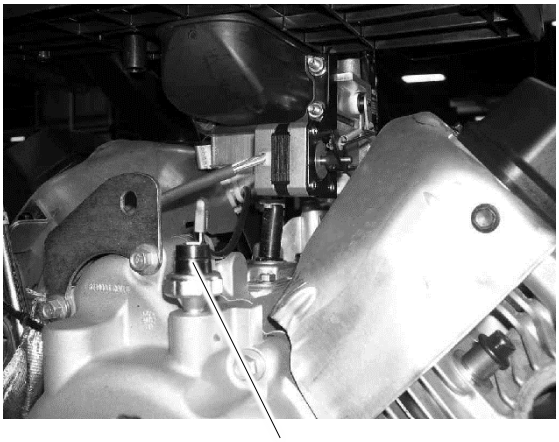

Figure 83 Oil Pressure Switch Location (under the air cleaner)

Before testing the LOP switch, check the oil level and add oil if necessary. Inspect the generator set engine for evidence of oil leaks.

To test the LOP switch:

1. Press the OFF button to stop the engine.
2. Disconnect lead 13 from the switch.
3. Use an ohmmeter or continuity tester to verify that the switch is closed (connected to the engine block).
4. Start the engine and verify that the switch opens after a few seconds.

If the LOP switch does not operate as described above, use a gauge to check the oil pressure:

1. Press the OFF button to stop the engine.
2. Remove the LOP switch and install an oil pressure gauge.
3. Start and run the generator set.
4. Verify that the engine oil pressure is within the range specified in the Specifications section, before replacing the LOP switch.

Low Oil Level (LOL) Switch (26RCA(L) only)

The low oil level switch protects the engine against internal damage if the oil pressure drops below a minimum level. The engine shuts down and a fault message is displayed on the controller if the oil level is too low. See the Faults section for instructions if the generator set shuts down on a fault.

Check the oil level regularly and add oil as needed.

6.11 Fuel Systems

WARNING	
	**Risk of fire.** **Can cause severe injury or death.** Do not smoke or permit flames or sparks near fuels or the fuel system.

WARNING	
	**Explosive fuel vapors.** **Can cause severe injury or death.** Use extreme care when handling, storing, and using fuels.

The fuel system. Explosive fuel vapors can cause severe injury or death. Vaporized fuels are highly explosive. Use extreme care when handling and storing fuels. Store fuels in a well-ventilated area away from spark-producing equipment and out of the reach of children. Never add fuel to the tank while the engine is running because spilled fuel may ignite on contact with hot parts or from sparks. Do not smoke or permit flames or sparks to occur near sources of spilled fuel or fuel vapors. Keep the fuel lines and connections tight and in good condition. Do not replace flexible fuel lines with rigid lines. Use flexible sections to avoid fuel line breakage caused by vibration. Do not operate the generator set in the presence of fuel leaks, fuel accumulation, or sparks. Repair fuel systems before resuming generator set operation.

Gas fuel leaks. Explosive fuel vapors can cause severe injury or death. Fuel leakage can cause an explosion. Check the LPG vapor or natural gas fuel system for leakage by using a soap and water solution with the fuel system test pressurized to 6–8 ounces per square inch (10–14 inches water column). Do not use a soap solution containing either ammonia or chlorine because both prevent bubble formation. A successful test depends on the ability of the solution to bubble.

The fuel supplier provides and maintains manual shut-off valves and the primary regulator. See the generator set installation manual for fuel pipe size recommendations. Verify that the fuel system capacity is adequate to supply the generator set plus all other gas appliances.

A factory-installed secondary regulator and 12 VDC solenoid valve are located in the front air intake compartment. See the Fuel System figure.

The controller energizes the fuel solenoid valve to open at startup and deenergizes the valve to close at shutdown. The secondary fuel regulator is a demand regulator that meters fuel flow to the mixing assembly in a gaseous state. The carburetor mixes the fuel with intake air for consumption by the engine.

Refer to the troubleshooting instructions in the Troubleshooting section, to identify generator set operation problems that may be caused by an inadequate fuel supply, incorrect adjustments, or damaged fuel system components. Then use the instructions in this section to check fuel system components.

6.11.1 Fuel Regulators

The typical gaseous fuel system uses two regulators. The primary regulator reduces the line pressure to an allowable inlet pressure for the secondary regulator. The fuel supplier provides and maintains the primary regulator. The secondary regulator is factory-installed on the generator set and is designed for a maximum inlet pressure of 2.7 kPa (6 oz./in.^{2}) or 280 mm (11 in.) water column.

Note:
Do not attempt to adjust the fuel mixture or engine speed by adjusting the regulators.

The fuel lockoff prevents fuel flow when the engine is not operating. See the Fuel Regulator figure. Do not try to adjust the fuel pressure, fuel mixture, or engine speed using the fuel lockoff.

6.11.2 Fuel Solenoid Valve

A solenoid valve upstream of the regulator provides automatic fuel on/off control. See Figure 84. The engine starting battery powers the solenoid valve and the engine starting controls open the valve when the engine cranks or runs.

Fuel Valve Operation Test Procedure

1. Disconnect the positive (+) battery lead from the gas valve terminal.
2. Apply 12 VDC to the gas valve terminal and listen for an audible click, indicating that the valve actuates.
3. Replace the gas valve if it does not actuate in step 2.

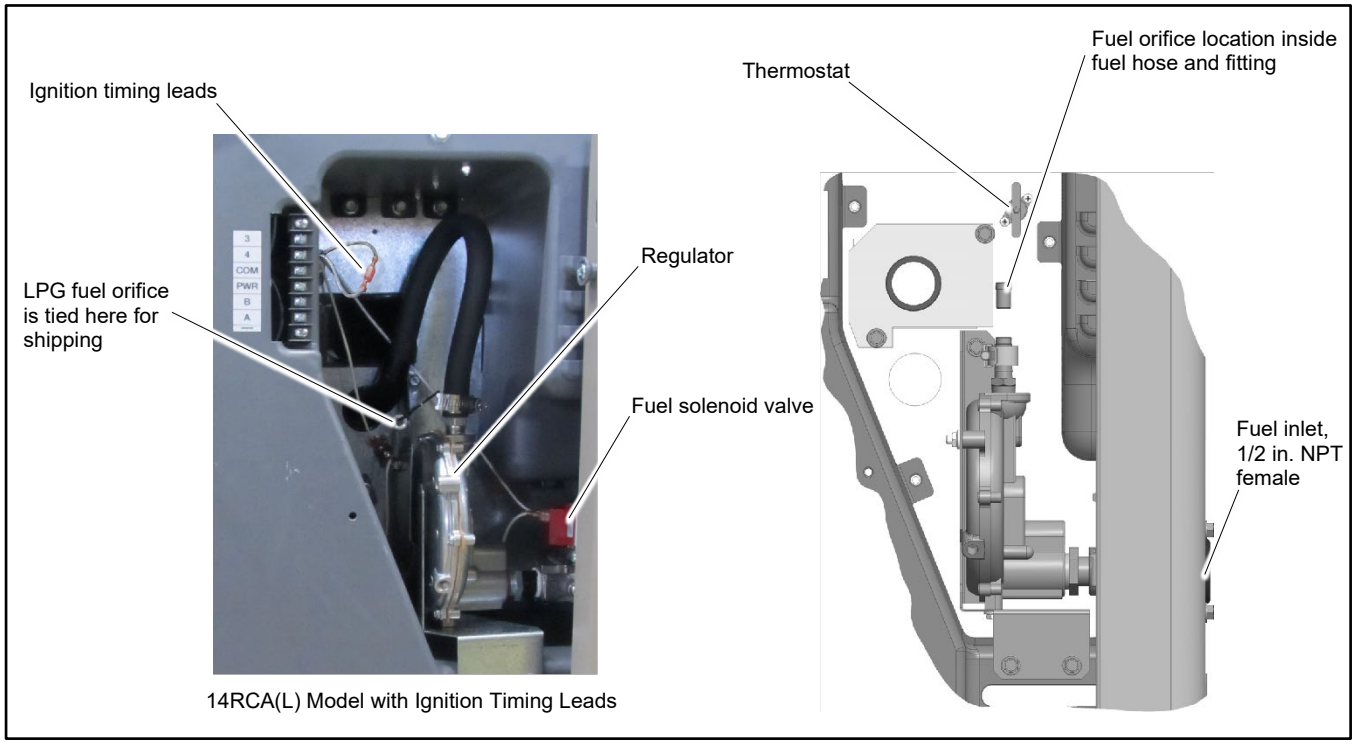

Figure 84 Fuel System

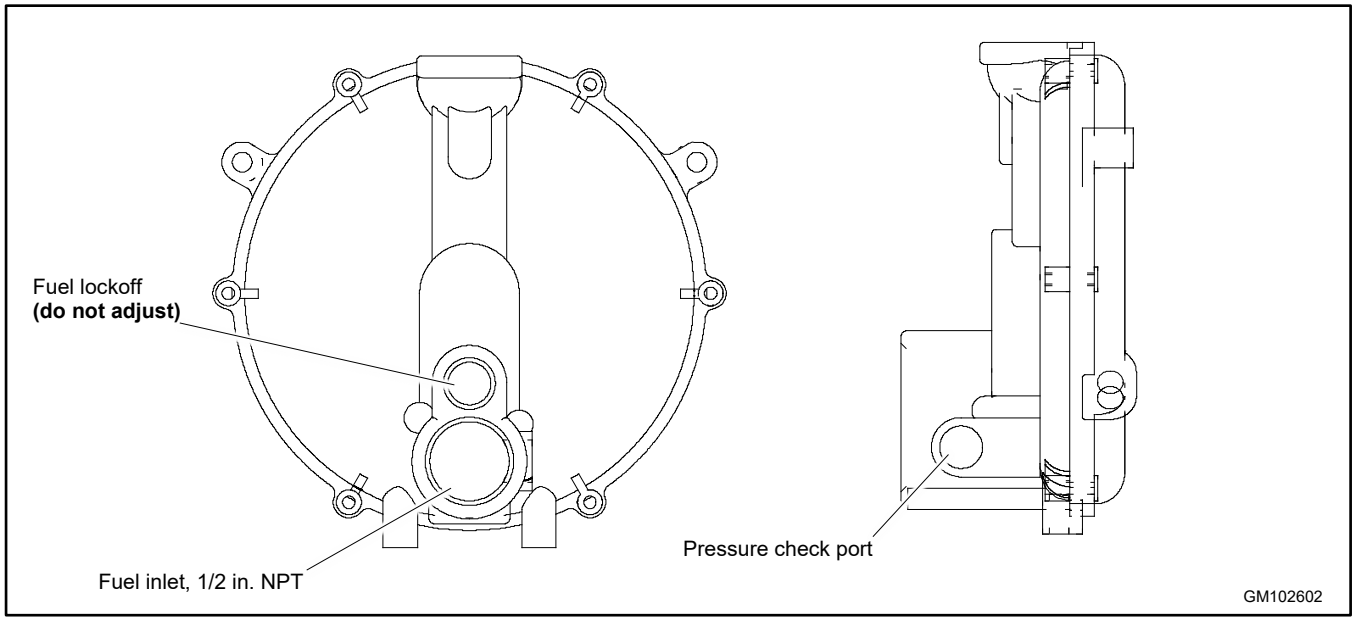

Figure 85 Fuel Regulator

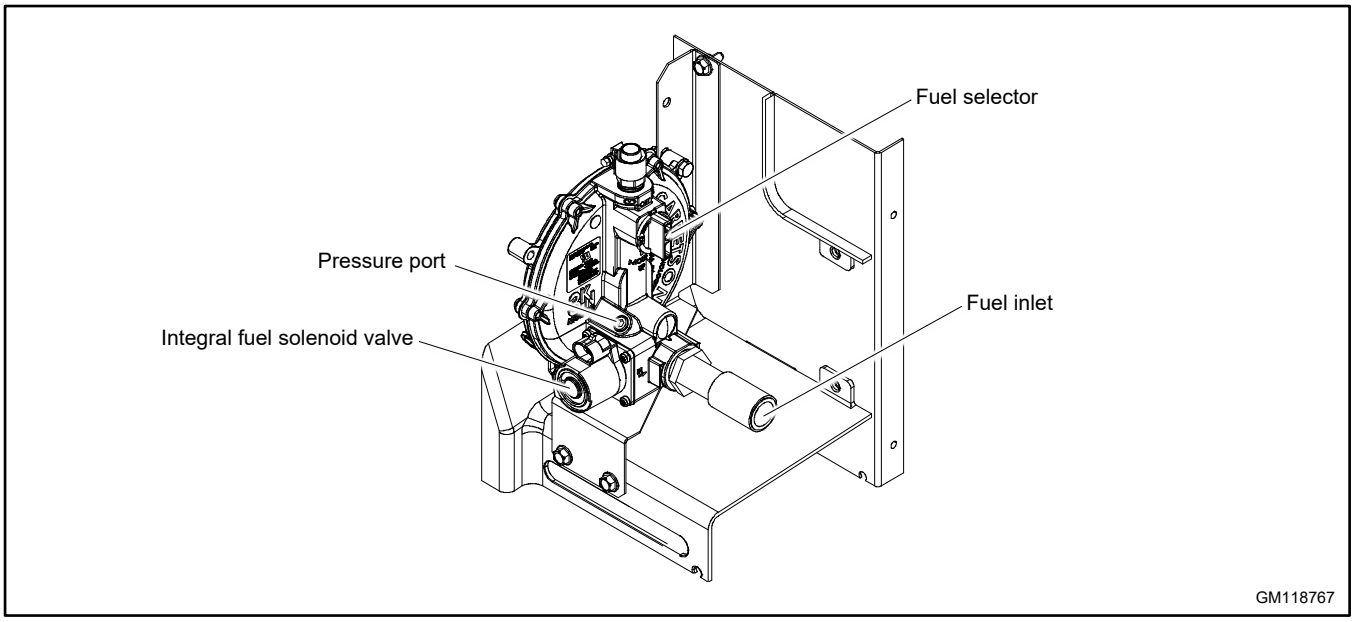

Figure 86 Fuel Regulator, 26RCA(L) Model

6.11.3 Checking the Fuel Pressure

Use a gauge or manometer to check the fuel pressure at the fuel solenoid valve. See the Fuel Regulator, 26RCA(L) Model figure for the location of the fuel pressure port on 26RCA(L) models. See Figure 87. Measure the fuel pressure with the generator set running at rated load. Contact the fuel supplier if the inlet pressure is not within the range shown in Figure 88.

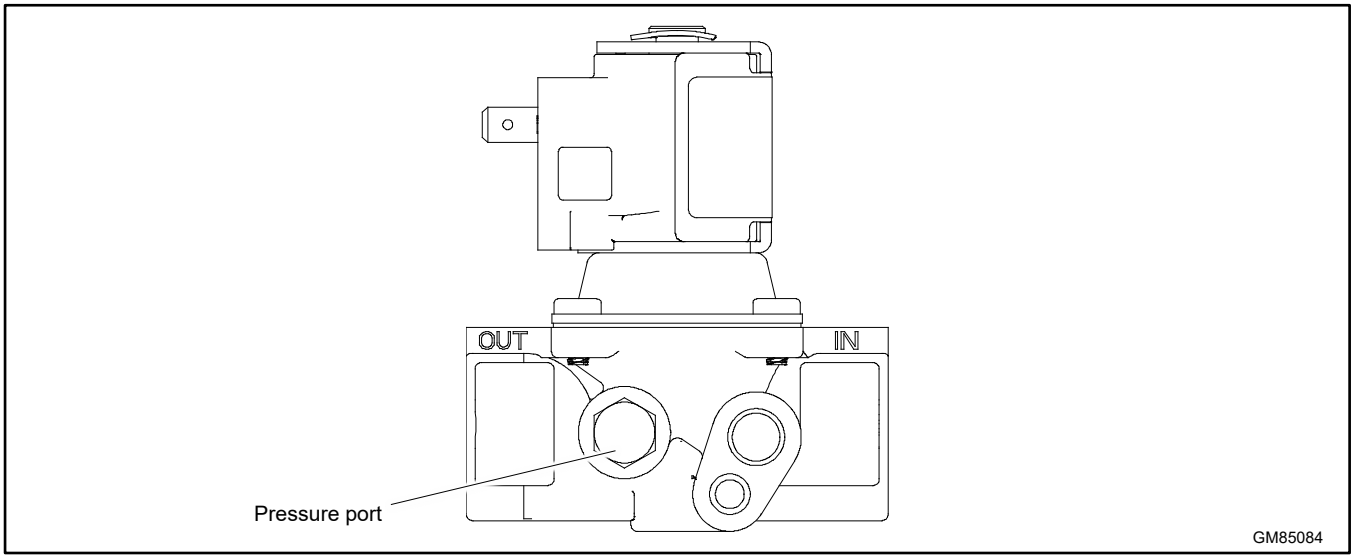

Figure 87 Pressure Port in Fuel Solenoid Valve 14/20RCA(L) Models

Fuel	Fuel Pressure Required
Natural Gas	0.9-2.7 kPa (3.5-11 inches H_2O)
LPG	1.7-2.7 kPa (7-11 inches H_2O)

Figure 88 Fuel Pressure Requirements

6.11.4 Ignition Timing Leads (14RCA(L) and 26RCA(L) Models only)

The digital spark advance ignition (DSAI) optimizes the 14RCA(L) and 26RCA(L) generator engines timing for the selected fuel, natural gas or LPG. Ignition timing leads 65 and N3 are located near the fuel solenoid valve. See the Fuel System figure. Connect the ignition timing leads together for natural gas fuel. Disconnect the leads if LPG is used. See Figure 89.

Note:
The ignition timing leads have no effect on 20RCA(L) models.

See the engine service manual for ignition system service information.

Ignition Timing Leads 65 and N3	
Fuel Type	
Natural Gas	Connect
LPG	Disconnect

Figure 89 Ignition Timing Lead Connection

6.12 Fuel Conversion

The multi-fuel system allows conversion from natural gas to LPG (or vice-versa) in the field while maintaining emissions-standard compliance. A trained technician or an authorized dealer can convert the fuel system.

After converting the fuel system, change the Fuel Type setting on the controller. See the Operation Manual for instructions to change settings at the controller, or use a personal (laptop) computer and SiteTech™ software to change the setting.

Rating Change

Converting the fuel will change the generator set rating. See the generator set specification sheet for ratings with natural gas and LP. Order a new nameplate with the updated rating and fuel information from an authorized dealer, if necessary. Provide the following information from the original nameplate:

- Model Number
- Spec Number
- Serial Number
- Fuel (original and new)
- kW
- kVA
- Amps
- Volts
- Hz

Attach the new nameplate over the old one. Do NOT cover the UL listing information on the old nameplate.

WARNING	**Accidental starting.** **Can cause severe injury or death.** Disconnect the battery cables before working on the generator set. Remove the negative (–) lead first when disconnecting the battery. Reconnect the negative (–) lead last when reconnecting the battery.

Disabling the generator set. Accidental starting can cause severe injury or death. Before working on the generator set or equipment connected to the set, disable the generator set as follows: (1) Press the generator set off/reset button to shut down the generator set. (2) Disconnect the power to the battery charger, if equipped. (3) Remove the battery cables, negative (–) lead first. Reconnect the negative (–) lead last when reconnecting the battery. Follow these precautions to prevent the starting of the generator set by the remote start/stop switch.

WARNING	**Explosive fuel vapors.** **Can cause severe injury or death.** Use extreme care when handling, storing, and using fuels.

Explosive fuel vapors can cause severe injury or death. Take additional precautions when using the following fuels:

Propane (LPG)—Adequate ventilation is mandatory. Because propane is heavier than air, install propane gas detectors low in a room. Inspect the detectors per the manufacturer's instructions.

Natural Gas—Adequate ventilation is mandatory. Because natural gas rises, install natural gas detectors high in a room. Inspect the detectors per the manufacturer's instructions.

6.12.1 Original Fuel System, 14RCA(L)

For natural gas and LPG fuel, orifice fittings are used in the fuel line. See Figure 90. The natural gas orifice fitting is silver in color and stamped NG. The LPG fitting is gold in color and stamped LPG. The fittings are threaded. A straight-blade screwdriver is required to remove and replace the fittings.

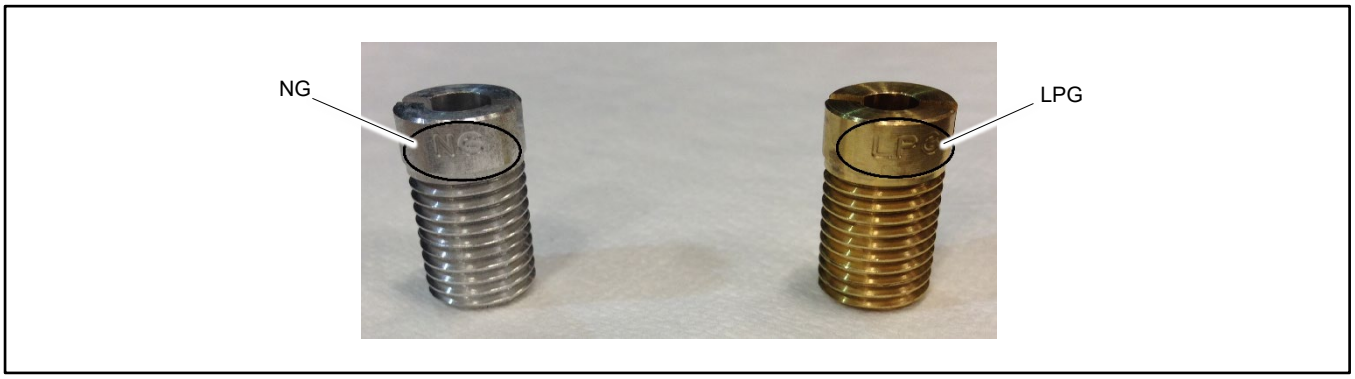

Figure 90 NG and LPG Fuel Orifice Fittings

The unit is typically shipped set up for natural gas, with the LPG fitting tied near the fuel solenoid valve. To convert to LPG, remove the NG fitting and install the LPG fitting as described below. See Figure 91 for the fuel system component locations.

Procedure to Convert from NG to LPG, 14RCA(L)

1. Press the OFF button on the generator set controller.
2. Disconnect the utility power to the generator.
3. Disconnect the generator set engine starting battery, negative (-) lead first.
4. Turn off and disconnect the fuel supply.
5. Remove the fuel hose from the hose fitting on the top of the regulator. See Figure 91.
6. Use a straight-blade screwdriver to remove the NG orifice from the hose fitting. See Figure 92.
7. Insert the LPG orifice into the hose fitting. Use a straight-blade screwdriver to tighten the fitting until it is snug.
8. Slide the hose onto the hose fitting and secure it with the clamp.
9. Disconnect ignition timing leads 65 and N3 for LPG. The ignition timing leads are located near the top of the compartment. See Figure 91.
10. Connect and turn on the new fuel supply.
11. Reconnect the generator set engine starting battery leads, negative (-) lead last.
12. Reconnect the utility power to the generator.
13. Change the fuel type setting on the RDC2 controller in the Genset System menu. See the Operation Manual for instructions to change settings on the controller.
14. Start the generator set by pressing the RUN button on the generator set controller.
15. Check for leaks using a gas leak detector.
16. Press the OFF button to shut down the generator set.

Conversion from LPG to Natural Gas, 14RCA(L)

To convert from LPG to natural gas, repeat the steps above, removing the LPG fuel orifice and installing the NG fitting. Connect ignition timing leads 65 and N3 together for natural gas.

Change the fuel type setting on the RDC2 controller in the Genset System menu. See the Operation Manual for instructions to change settings on the controller.

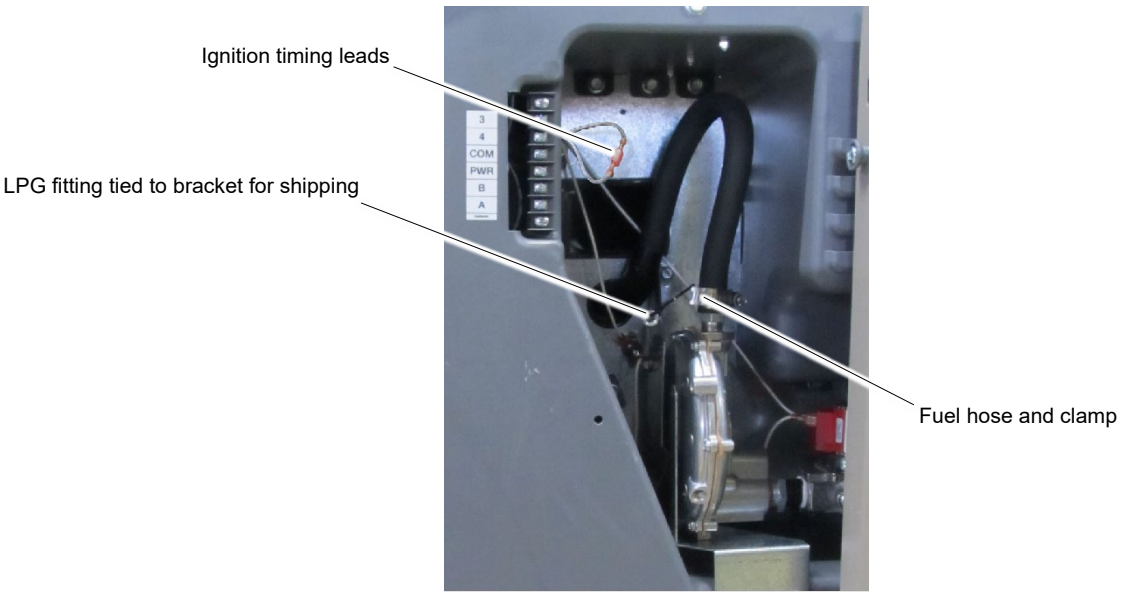

IGNITION TIMING	
FUEL TYPE	
NATURAL GAS	CONNECT 65 TO N
LP GAS	DO NOT CONNECT

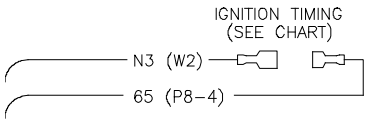

Ignition Timing Lead Connection

Figure 91 Fuel System, As Shipped

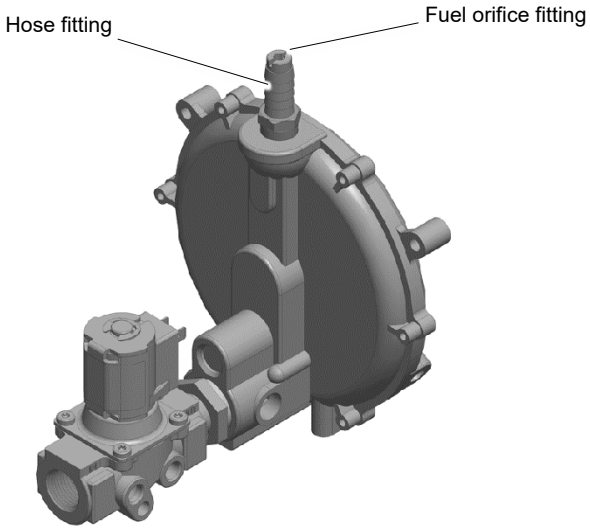

Figure 92 Fuel System Showing Orifice Fitting

6.12.2 Original Fuel System, 20RCA(L)

For LPG fuel, an orifice is used in the fuel line. The unit is typically shipped set up for natural gas, with the loose orifice tied near the fuel solenoid valve. To convert to LPG, install the LPG orifice as described below. See the Fuel System, As Shipped figure for the fuel system component locations.

Note:
The generator set harness may contain a pair of ignition timing leads near the fuel solenoid valve. Connecting or disconnecting these leads has no effect on the 20RCA(L) operation.

Procedure to Convert from NG to LPG, 20RCA(L)

1. Press the OFF button on the generator set controller.
2. Disconnect utility power to the generator set (open the corresponding circuit breaker in the distribution panel).
3. Disconnect the generator set engine starting battery, negative (-) lead first.
4. Turn off the fuel supply.
5. Remove the hose clamp and fuel hose from the hose fitting. See the Fuel System, As Shipped figure.
6. Insert the LPG orifice into the hose fitting. See Figure 93.
7. Slide the hose onto the hose fitting and secure it with the clamp.
8. Connect and turn on the new fuel supply.
9. Reconnect the generator set engine starting battery leads, negative (-) lead last.
10. Reconnect utility power to the generator set.
11. Change the fuel type setting on the RDC2 controller in the Genset System menu. See the Operation Manual for instructions to change settings on the controller.
12. Start the generator set by pressing the RUN button on the generator set controller.
13. Check for leaks using a gas leak detector.
14. Press the OFF button to shut down the generator set.

Conversion from LPG to Natural Gas, 20RCA(L)

To convert from LPG to natural gas, repeat the steps above to remove the LPG fuel orifice.

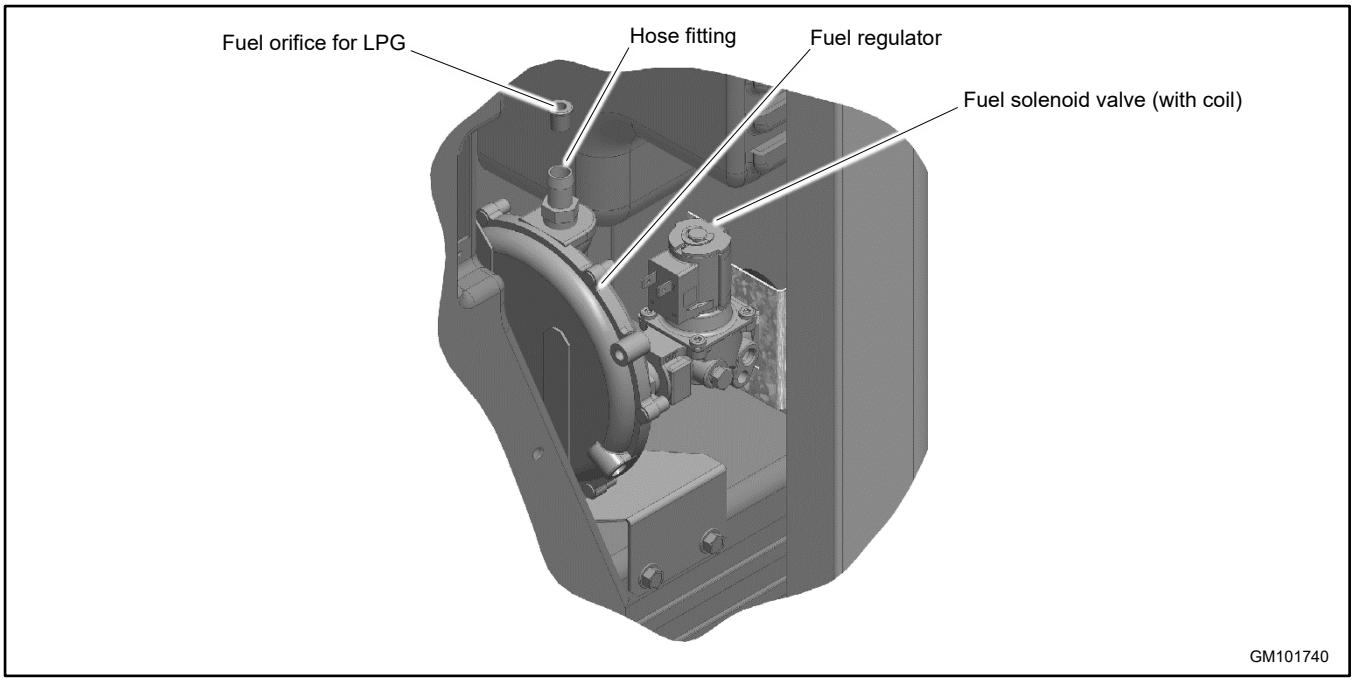

Figure 93 Fuel Regulator and LPG Orifice, 20RCA(L)

6.12.3 Revised Fuel System, 14/20/26RCA(L)

The revised fuel system uses a knob that controls a valve on the regulator to select the fuel type. See Figure 94 and Figure 95.

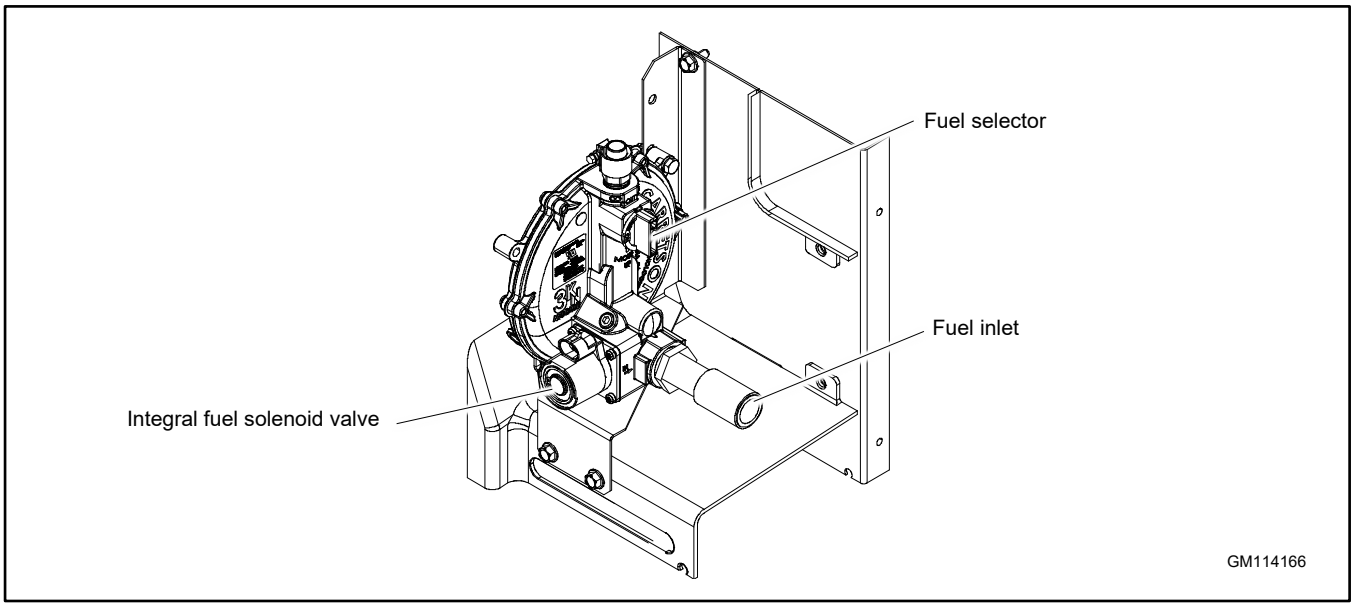

Figure 94 Revised Fuel System

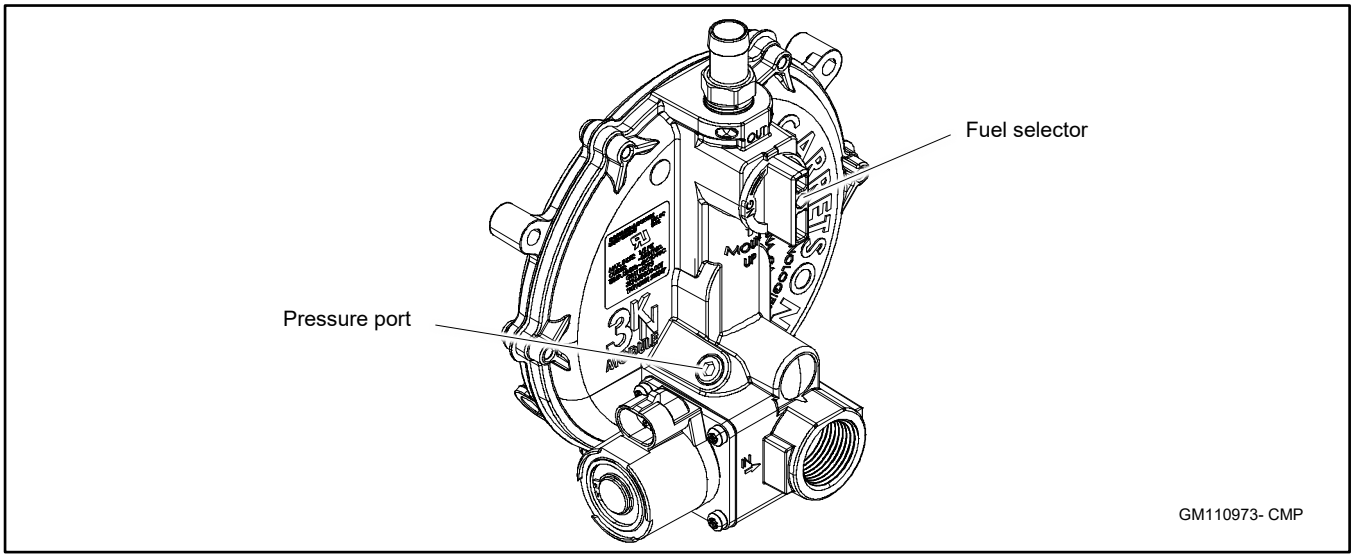

Figure 95 Fuel Selection (NG Position Shown)

Fuel Selection, Revised Fuel System

1. Press the OFF button on the generator set controller.
2. Disconnect utility power to the generator set (open the corresponding circuit breaker in the distribution panel).
3. Disconnect the generator set engine starting battery, negative (-) lead first.
4. Turn off the fuel supply.
5. To change the fuel selection:
    a. For natural gas (NG), turn the selection knob all the way clockwise. The knob lines up with the UP arrow on the regulator body as shown in Figure 96.



14/20RCA(L) Models

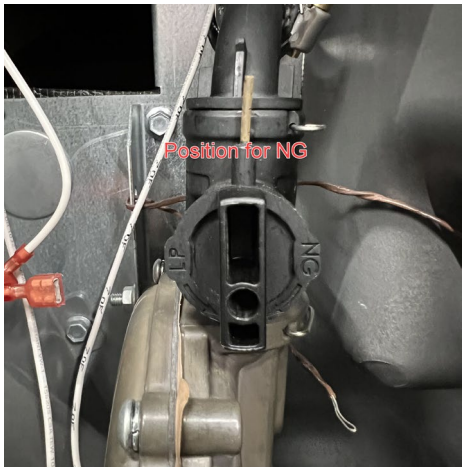

26RCA(L) Models

Figure 96 Knob Position, NG

    b. For LPG, turn the selection knob counterclockwise as far as it will go, approximately ¼ turn. See Figure 97.



14/20RCA(L) Models

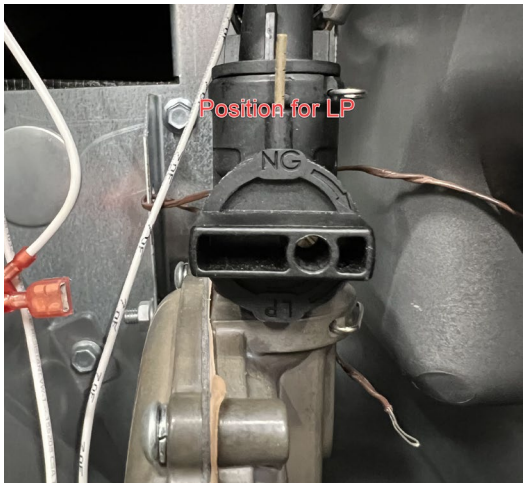

26RCA(L) Models

Figure 97 Knob Position, LPG

6. Find the ignition timing leads 65 and N, located near the regulator. See Figure 98.
    a. For natural gas (NG), connect lead 65 to lead N3.
    b. For LPG, disconnect lead 65 from lead N3.

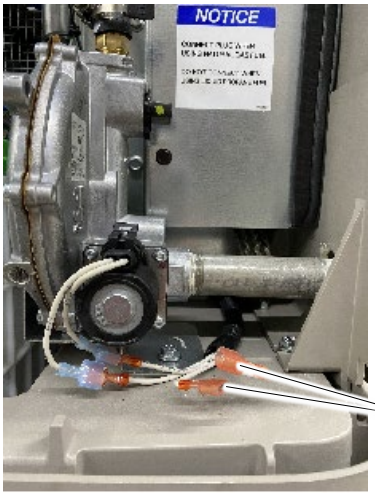

Ignition timing leads

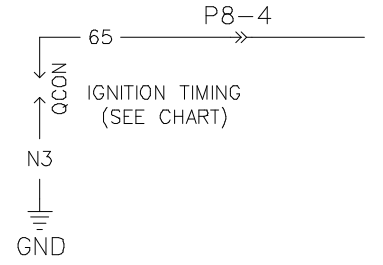

IGNITION TIMING	
FUEL TYPE	
NATURAL GAS	CONNECT 65 TO N3
LP GAS	DO NOT CONNECT

Figure 98 Ignition Timing Leads

7. Connect and turn on the fuel supply (Ensure that the fuel supply matches the fuel setting).
8. Reconnect the generator set engine starting battery leads, negative (-) lead last.
9. Reconnect the utility power to the generator.
10. Change the fuel type setting on the RDC2 controller in the Genset System menu. See the Operation Manual for instructions to change settings on the controller.
11. Start the generator set by pressing the RUN button on the generator set controller.
12. Check for leaks using a gas leak detector.
13. Run the generator set and check the operation.
14. Press the OFF button to shut down the generator set.

Pressure Port

A pressure port is provided on the fuel regulator. See Figure 95. Follow these steps to check the fuel pressure at the regulator, if necessary.

1. Remove the plug from the fuel pressure port.
2. Connect a manometer capable of measuring low pressures (3-11 inches water column) to the pressure port.
3. When finished, replace the plug in the pressure port and check for leaks.

6.13 Start (Crank) and Run Relays

The start (crank) and run relays are located under the controller. See Figure 101. Identify the relays by the connected leads shown in Figure 99. The start relay is connected to lead 71 from the controller (P1-14). The run relay is connected to lead 70 from the controller (P1-13).

The start and run relays are energized during the engine start sequence as described in the Theory of Operation, Electronic Start Sequence section.

The relay contains an internal diode across the relay coil. See Figure 100. Continuity checks across the coil terminals will show continuity (low resistance) in one direction and an open circuit in the other.

Relay Terminal	Start (Crank) Relay Lead	Run Relay Lead
30 (1)	14P	P1
85 (2)	N2	N5
86 (3)	71	70
87A (4)	NC	N/C
87 (5)	14S	70C

Figure 99 Relay Connections

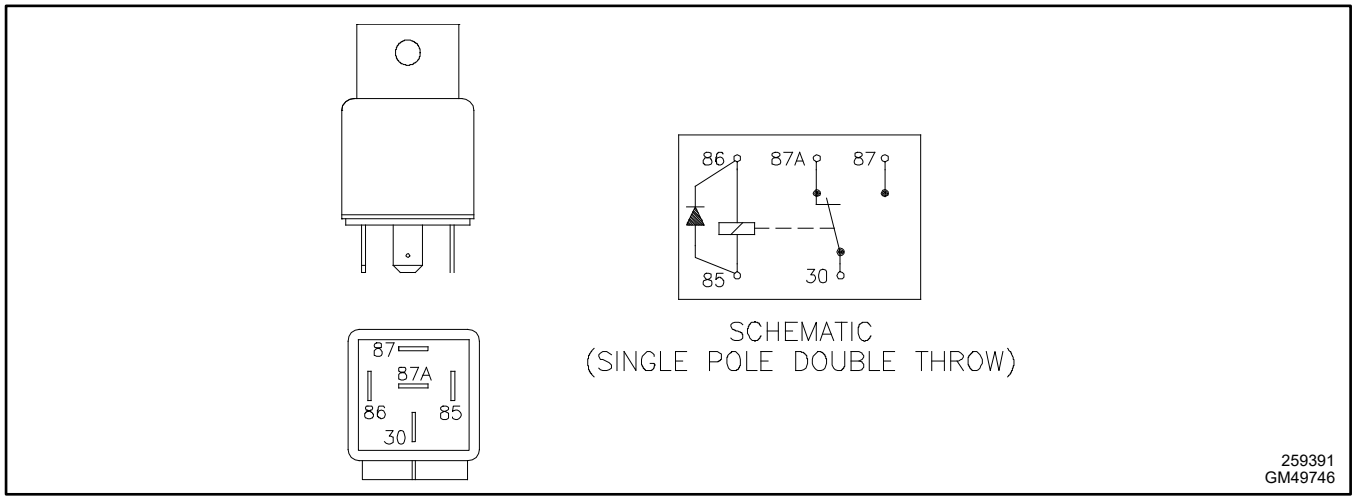

Figure 100 Start (Crank) or Run Relay

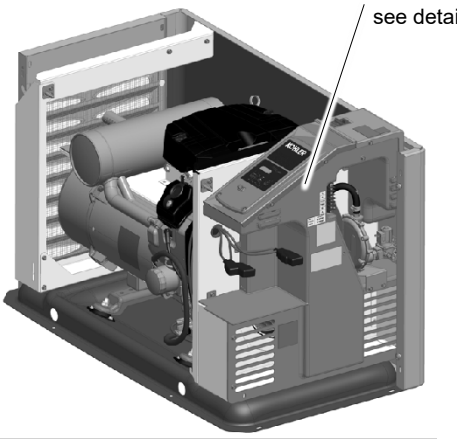

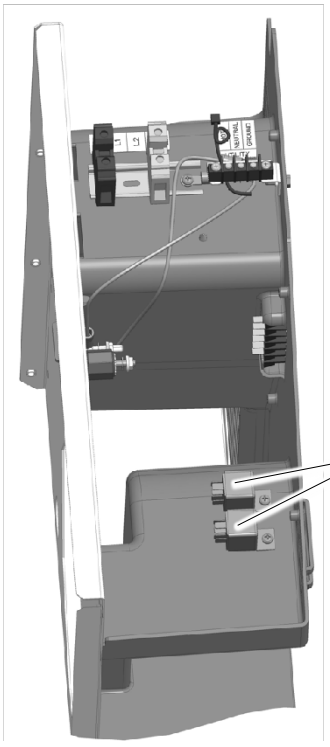

Figure 101 Relay Location

6.14 Continuity Checks

DANGER	
	**Hazardous voltage. Moving parts.** **Will cause severe injury or death.** Operate the generator set only when all guards and electrical enclosures are in place.

Short circuits. Hazardous voltage/current will cause severe injury or death. Short circuits can cause bodily injury and/or equipment damage. Do not contact electrical connections with tools or jewelry while making adjustments or repairs. Remove all jewelry before servicing the equipment.

To further check generator set components, disconnect the battery and remove wiring harness plugs from the controller circuit board. Use an ohmmeter to check the continuity of the components listed in Figure 102. Also see the Wiring Diagrams section.

Figure 102 gives resistance readings for functional components. A zero reading on the ohmmeter indicates continuity. No ohmmeter reading indicates very high resistance or an open circuit. A measurement that varies significantly from the value shown in the table indicates a faulty component; replace faulty components.

Note:
Disconnect the generator set battery before performing continuity checks to prevent damage to the ohmmeter.

For rotor and stator resistance and continuity checks, see the Stator section and the Main Field (Rotor) section.

Component	Ohmmeter Connections	Ohmmeter Scale	Generator Set State	Ohmmeter Readings for Operative Components
P1 wiring harness	P1-2 and ground	R x 1	OFF	Less than 1 ohm (continuity) Any other reading indicates a poor ground connection.
P2 wiring harness	P2-6 and P2-7 (stator leads 11 and 44)	R x 1	OFF	Less than 1 ohm (continuity). If no continuity, check wiring.
	P2-3 and P2-4 (stator leads 55 and 66)	R x 1	OFF	Less than 1 ohm (continuity). If no continuity, check auxiliary winding circuit breaker CB1 and wiring.
Controller wiring	P1-1 and battery positive (+)	R x 100	OFF	Less than 1 ohm (continuity). If no continuity is found, check wiring.
Auxiliary winding circuit breaker CB1 (20-amps)	55F (P2-3) and stator lead 55	R x 100	OFF	Less than 1 ohm (continuity). If no continuity is found, check for an open circuit.
Low oil pressure (LOP) switch *	Lead 13 (P1-24) and ground (engine block)	R x 100	OFF	Engine stopped: Less than 1 ohm (continuity). No continuity indicates a faulty switch and/or wiring. Engine running: No continuity; switch is open.
Temperature sensor (OTS) *	69R and 69 (P1-9 and P1-10)	R x 1000	OFF	180-2500 ohms, depending on engine temperature. See the Fault Shutdown Switches section. Less than 1 ohm or an open circuit indicates faulty wiring or a faulty sensor.

* See the Fault Shutdown Switches section

Figure 102 Continuity Checks

Notes

This section provides instructions for the removal and replacement of the generator set alternator. Before beginning the generator disassembly or reassembly procedure, carefully read all safety precautions at the beginning of this manual.

The engine and generator set may use both American Standard and metric hardware. Use the correct size tools to prevent rounding of the bolt heads and nuts.

WARNING	
	**Accidental starting.** **Can cause severe injury or death.** Disconnect the battery cables before working on the generator set. Remove the negative (–) lead first when disconnecting the battery. Reconnect the negative (–) lead last when reconnecting the battery.

Disabling the generator set. Accidental starting can cause severe injury or death. Before working on the generator set or equipment connected to the set, disable the generator set as follows: (1) Press the generator set off/reset button to shut down the generator set. (2) Disconnect the power to the battery charger, if equipped. (3) Remove the battery cables, negative (–) lead first. Reconnect the negative (–) lead last when reconnecting the battery. Follow these precautions to prevent the starting of the generator set by the remote start/stop switch.

DANGER	
	**Hazardous voltage.** **Will cause severe injury or death.** This equipment must be installed and serviced by qualified electrical personnel.

DANGER	
	**Hazardous voltage.** **Will cause severe injury or death.** Disconnect all power sources before opening the enclosure.

WARNING	
	**Hot engine and exhaust system.** **Can cause severe injury or death.** Do not work on the generator set until it cools.

WARNING	
	**Unbalanced weight.** **Improper lifting can cause severe injury or death and equipment damage.** Do not use lifting eyes. Lift the generator set using lifting bars inserted through the lifting holes on the skid.

WARNING	
	**Explosive fuel vapors.** **Can cause severe injury or death.** Use extreme care when handling, storing, and using fuels.

The fuel system. Explosive fuel vapors can cause severe injury or death. Vaporized fuels are highly explosive. Use extreme care when handling and storing fuels. Store fuels in a well-ventilated area away from spark-producing equipment and out of the reach of children. Never add fuel to the tank while the engine is running because spilled fuel may ignite on contact with hot parts or from sparks. Do not smoke or permit flames or sparks to occur near sources of spilled fuel or fuel vapors. Keep the fuel lines and connections tight and in good condition. Do not replace flexible fuel lines with rigid lines. Use flexible sections to avoid fuel line breakage caused by vibration. Do not operate the generator set in the presence of fuel leaks, fuel accumulation, or sparks. Repair fuel systems before resuming generator set operation.

7.1 Stator Hardware Change

In May of 2019, the mounting hardware on the stator was changed. See Figure 103. If you are replacing an original style stator with the updated stator, new mounting bolts and washers are required. Obtain the following hardware:

- M912-080-60, Screw, Socket Head Cap (Qty. 4)
- X-801-4, Washer, hardened, 0.328 ID x 0.719 in. OD (Qty. 4)

See Parts Bulletin PB-165 for more information.

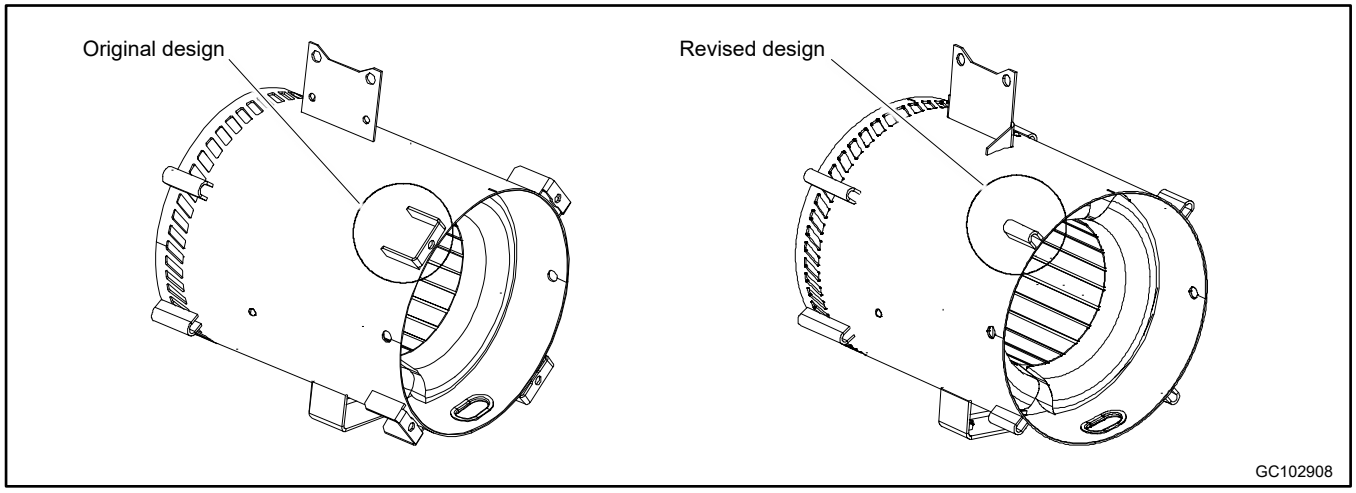

Figure 103 Stator Design

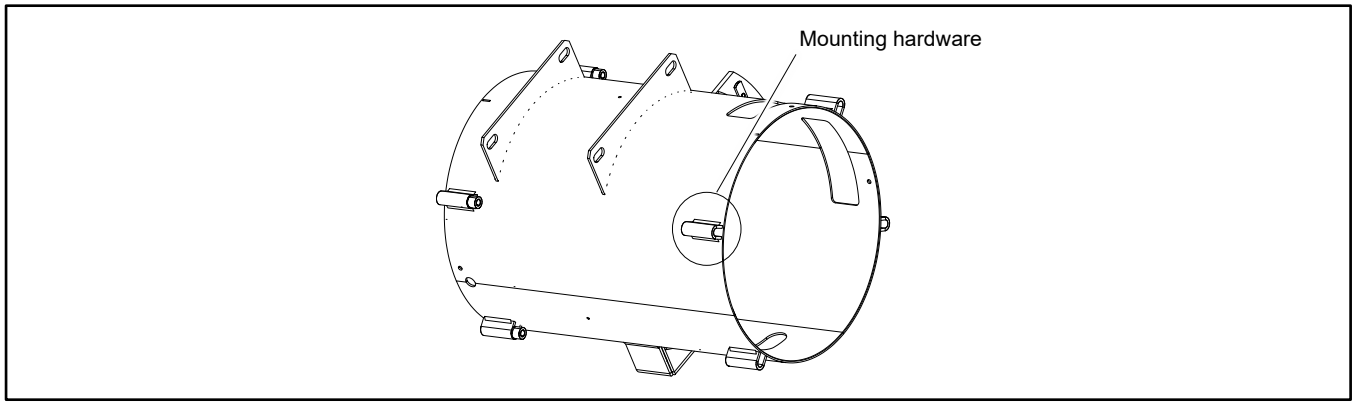

Figure 104 Stator Design, 26RCA(L) Model

7.2 Initial Steps

Perform the following steps before disassembling the generator set.

1. Disconnect AC power to the generator set by opening the upstream circuit breaker. (AC power is connected to the generator set for battery charging and AC-powered accessories.)
2. Shut off the fuel supply and disconnect the fuel line at the fuel inlet connection. See Figure 106. Ventilate the area to clear fumes.
3. Allow the generator set and engine to cool.
4. Verify that any hoists or lifting devices used in the disassembly or reassembly procedure are rated for the weight of the generator set shown in Figure 105.

Model	Weight, kg (lb)
14RCA	191 (420)
20RCA	243 (535)
26RCA	283 (625)

Figure 105 Approximate Weights

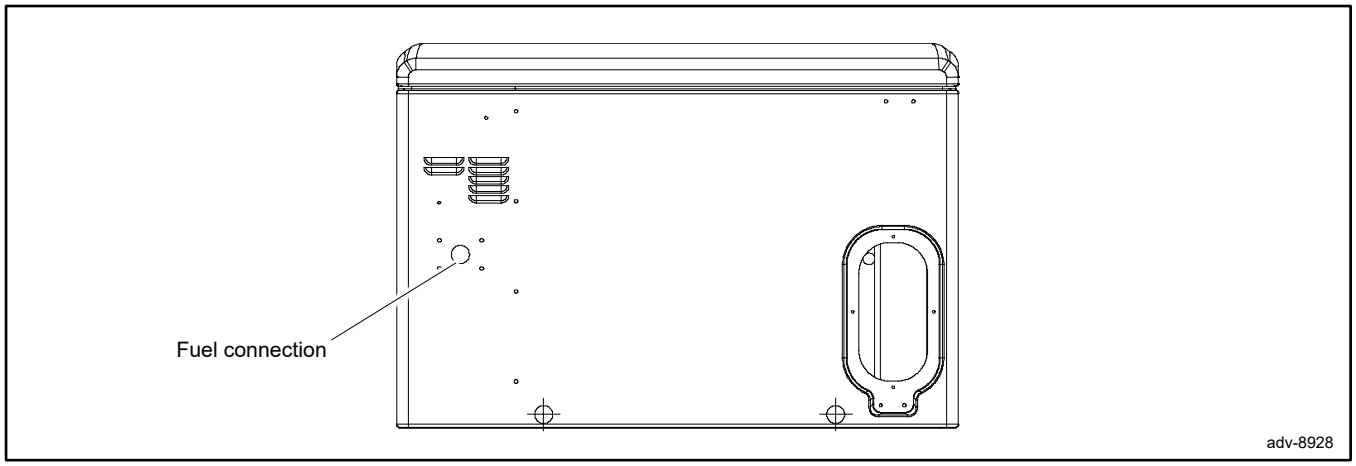

Figure 106 Fuel Connection Location

7.3 Disassembly

The disassembly procedure explains how to disassemble the generator set enclosure and other parts in order to access the alternator for service. The procedure provides important information to minimize disassembly time and indicates where special configurations exist which may require taking notes.

7.3.1 Remove Enclosure

Remove the generator set enclosure as described in the following steps. See Figure 107.

1. Open the enclosure roof.
2. Press the OFF button on the controller.

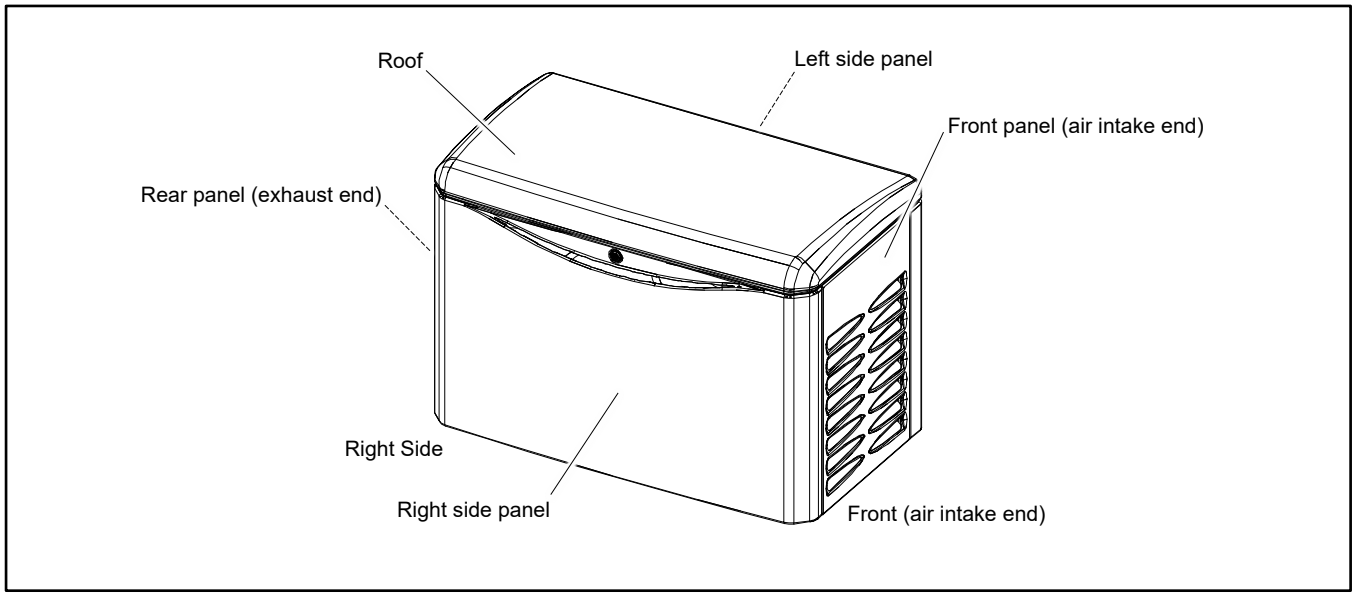

Figure 107 Enclosure

3. The roof hinges are connected to the front and rear bulkheads using 2 M6 screws for each hinge. See Figure 108. Remove the 4 screws and remove the roof.

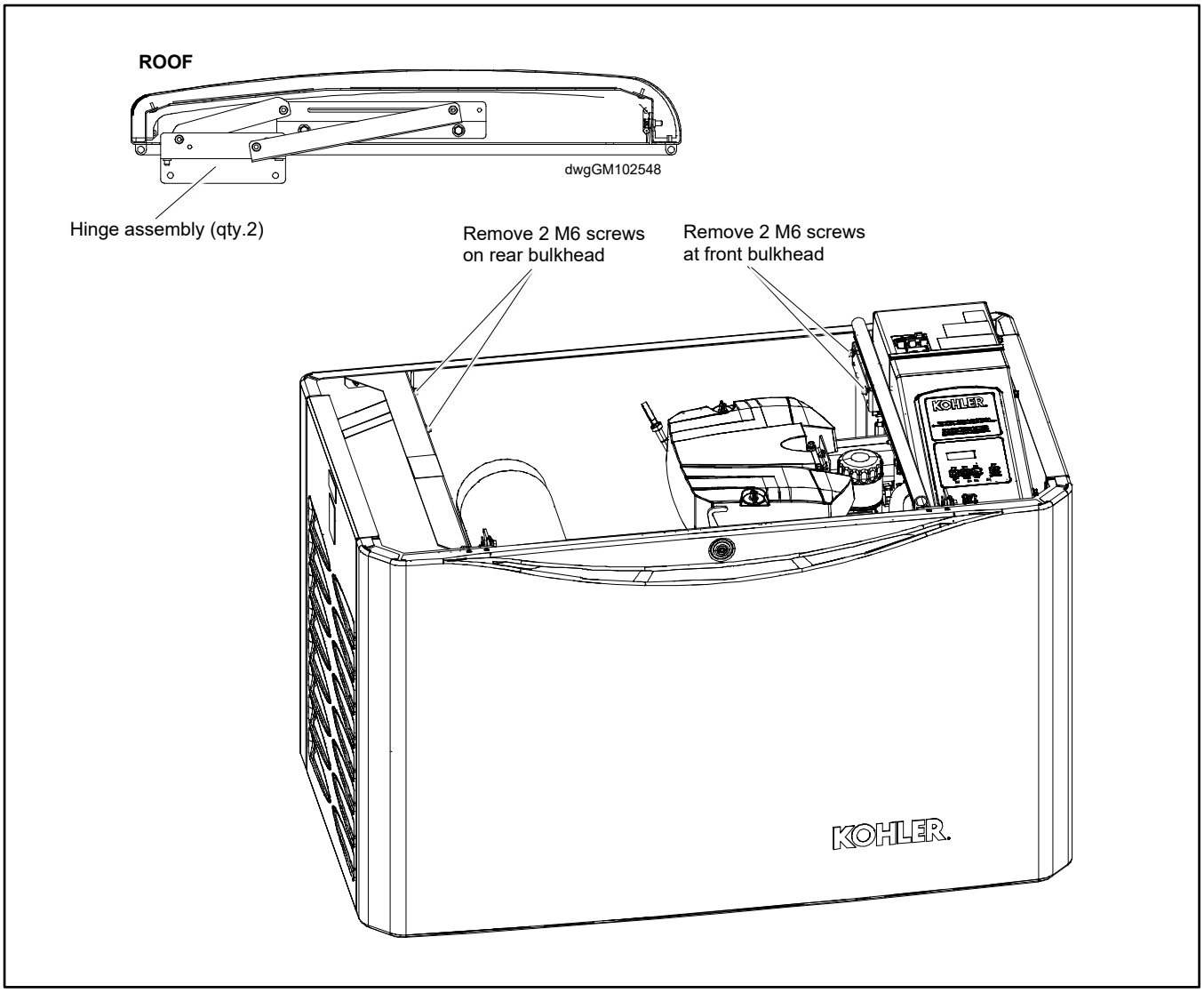

Figure 108 Roof Removal

4. The front (air intake) panel hangs on four 20 mm (0.8 in.) diameter bushings. Pull the air intake panel up and off. See Figure 109.
5. Unplug any accessories (if equipped) from the 120 VAC receptacle.
6. Verify that utility power to the generator set terminal block has been disconnected (the upstream circuit breaker has been opened).
7. Disconnect the generator set engine starting battery, negative (-) lead first.
8. Remove the cover above the controller to access the load circuit connections. See Figure 110.
9. Disconnect output leads or load circuit cables at the field-connection terminal block.
10. The exhaust end panel also hangs on four bushings. Pull the exhaust end panel up and off.

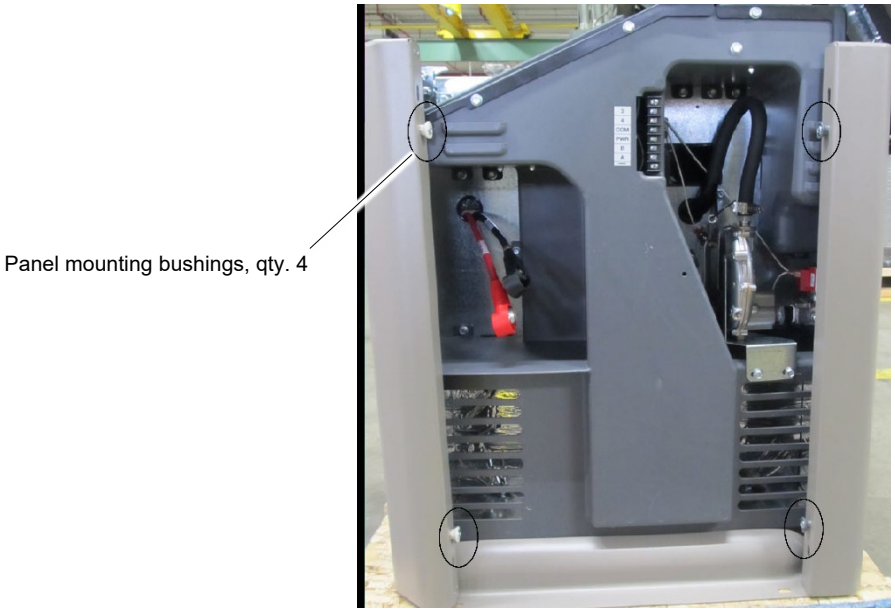

Figure 109 Panel Mounting Bushings (air intake end panel shown)

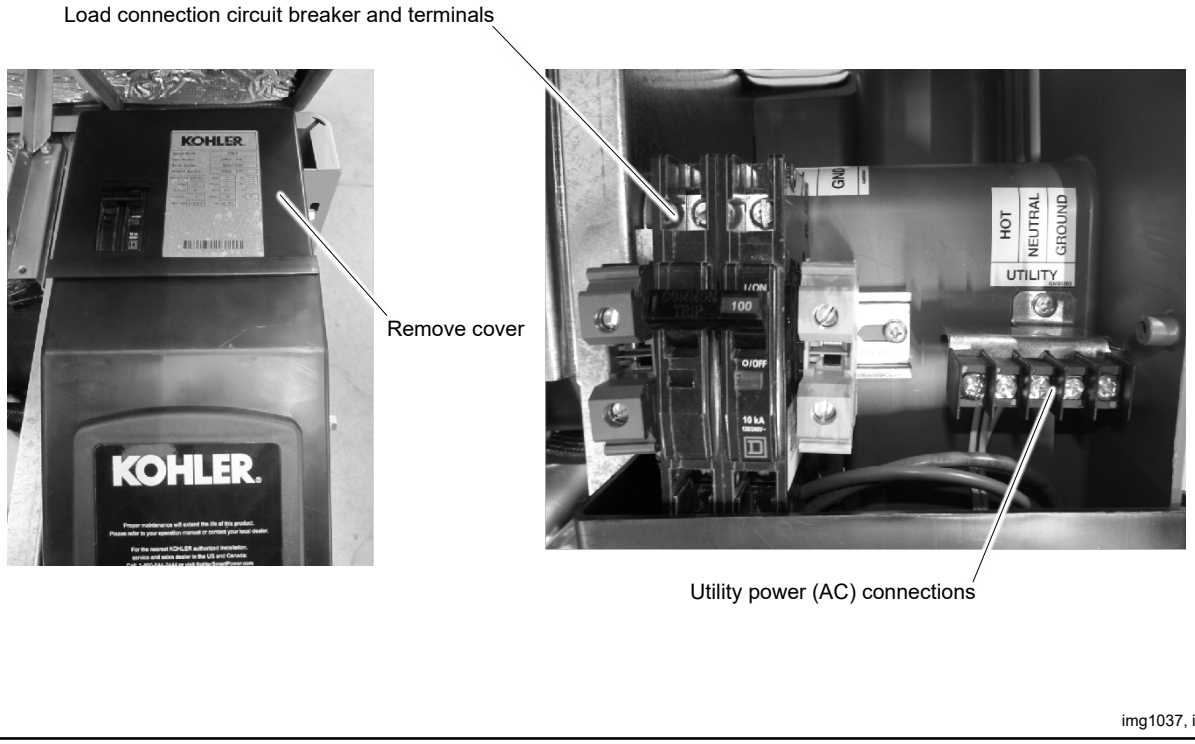

Figure 110 Field Connections

11. Remove the right-side panel:
    a. Locate two latches at the top of the panel. See Figure 111.
    b. Pull up on the top of each latch to release the panel.
    c. Pull the right-side panel toward you until it is free from the hooks at the bottom.

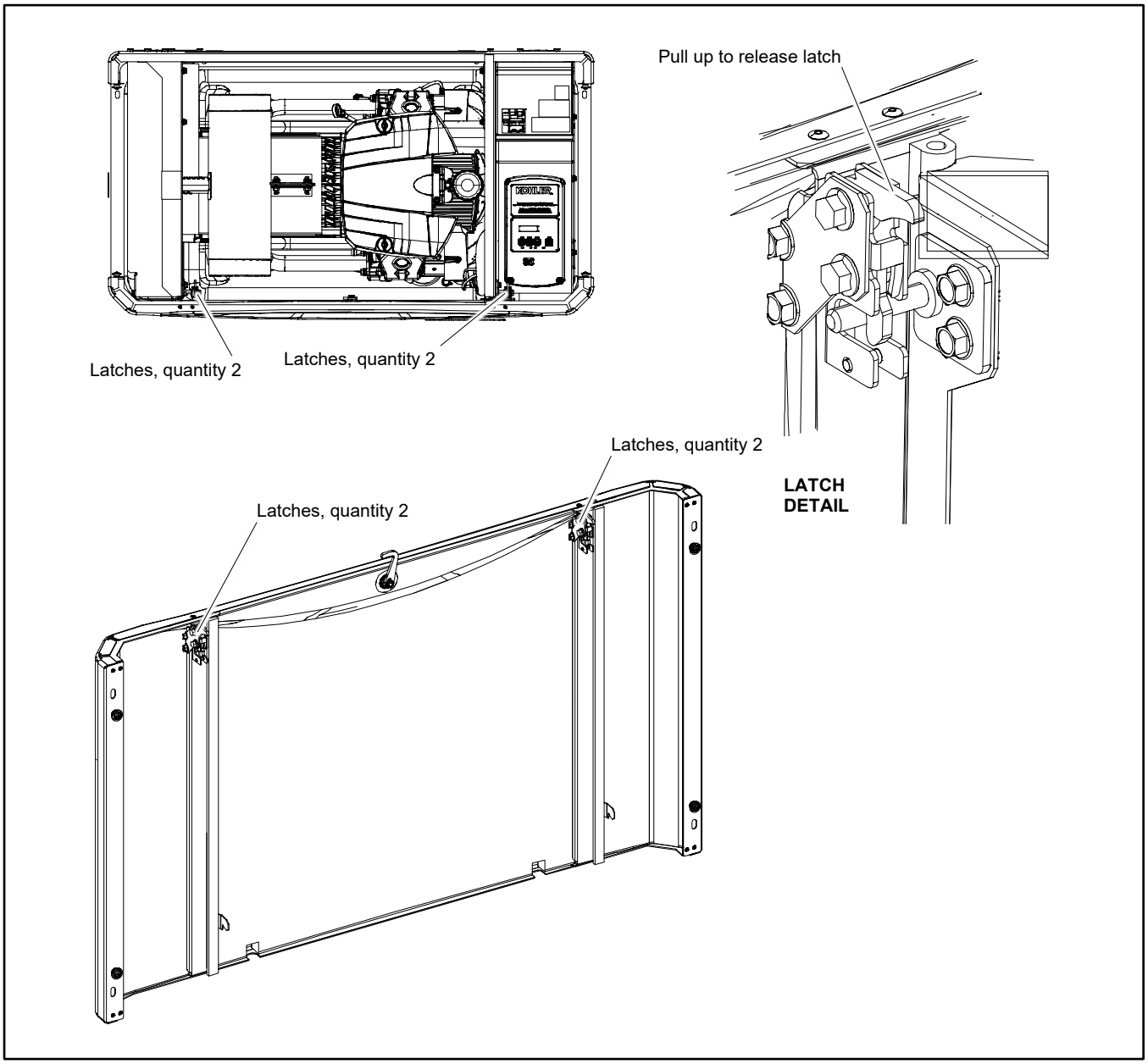

Figure 111 Right Side Panel

Remove the Left Side Panel

12. Make sure that the fuel line has been disconnected.
13. Label and disconnect any electrical leads that enter the enclosure through the panel. Disconnect conduit as needed to remove the enclosure panel.
14. On the outside of the enclosure, remove four screws that secure the left side panel to the bulkhead. See Figure 112.
15. Remove two screws that secure the left side panel to the top of the rear bulkhead on the alternator end.
16. Remove four screws securing the alternator bellows to the panel.
17. Be careful of the fuel system and electrical leads as you pull the panel toward you. When it is free from the screws at the bottom, lift the panel off.

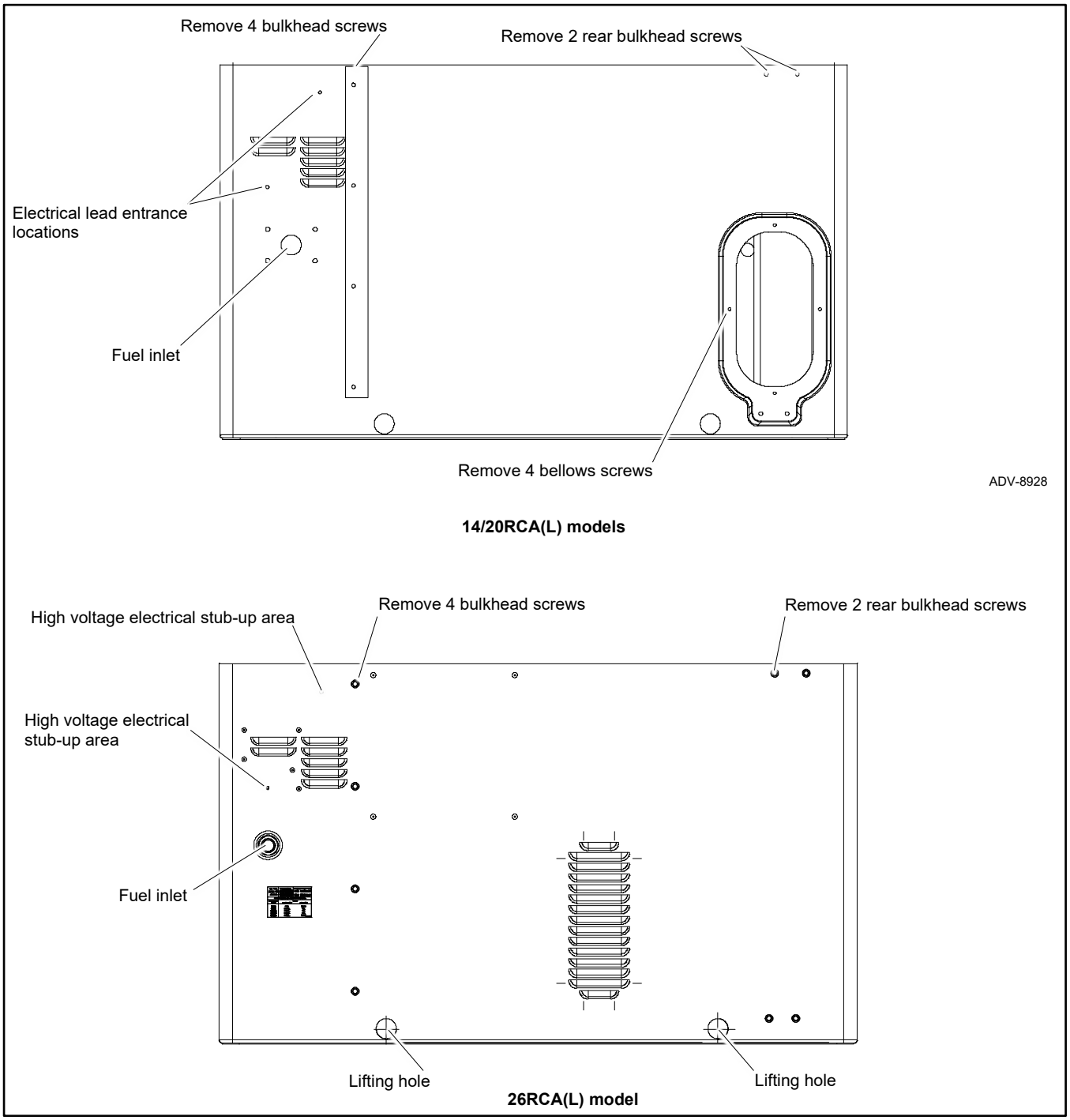

Figure 112 Left Side Panel

18. Remove four screws to remove the rear bulkhead. See Figure 113.

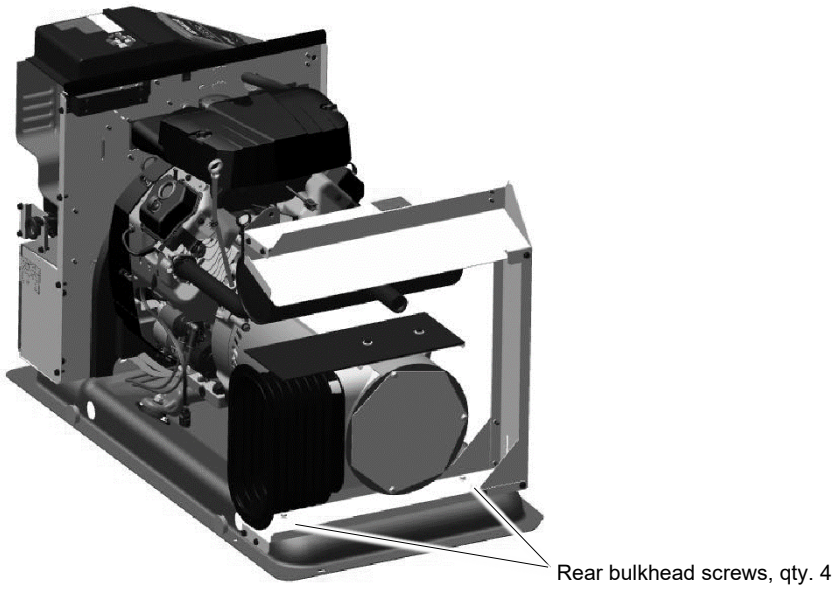

Figure 113 Rear Bulkhead

⚠ WARNING	**Hot engine and exhaust system.** **Can cause severe injury or death.** Do not work on the generator set until it cools.
	

Note:
Allow the muffler to cool before removing it.

19. Disconnect the muffler from the engine at the two flange connections. Loosen the screws on the muffler support bracket and remove the muffler. See Figure 114.

    Note:
    Use new exhaust gaskets when re-installing the muffler.

20. Remove the heat shields from the alternator. See Figure 114.

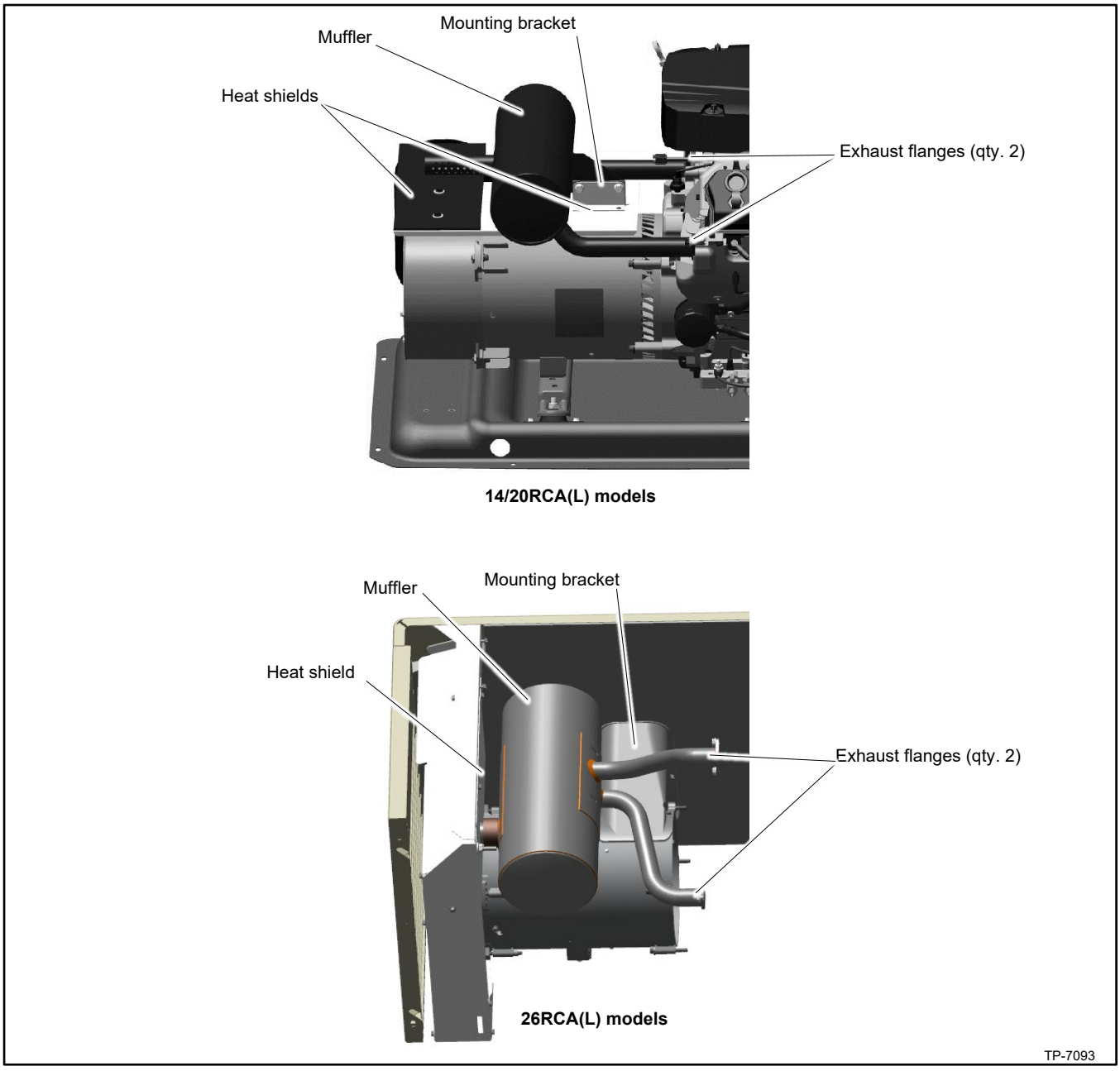

Figure 114 Muffler and Heat Shields

7.3.2 Generator Disassembly

21. Disconnect the following alternator wiring **inside the controller junction box.** See the wiring diagrams in the Wiring Diagrams section.

    a. Disconnect lead 55 from the mini-breaker on the controller.

    b. Disconnect P2 from the controller.

    c. Disconnect leads 2 and 3 from neutral stud L0.

    d. Disconnect leads 1 and 4 from the circuit breaker.

22. Remove the bolts securing the two alternator vibromounts to the skid. Loosen, but do not remove, the two engine vibromounts. See Figure 115.

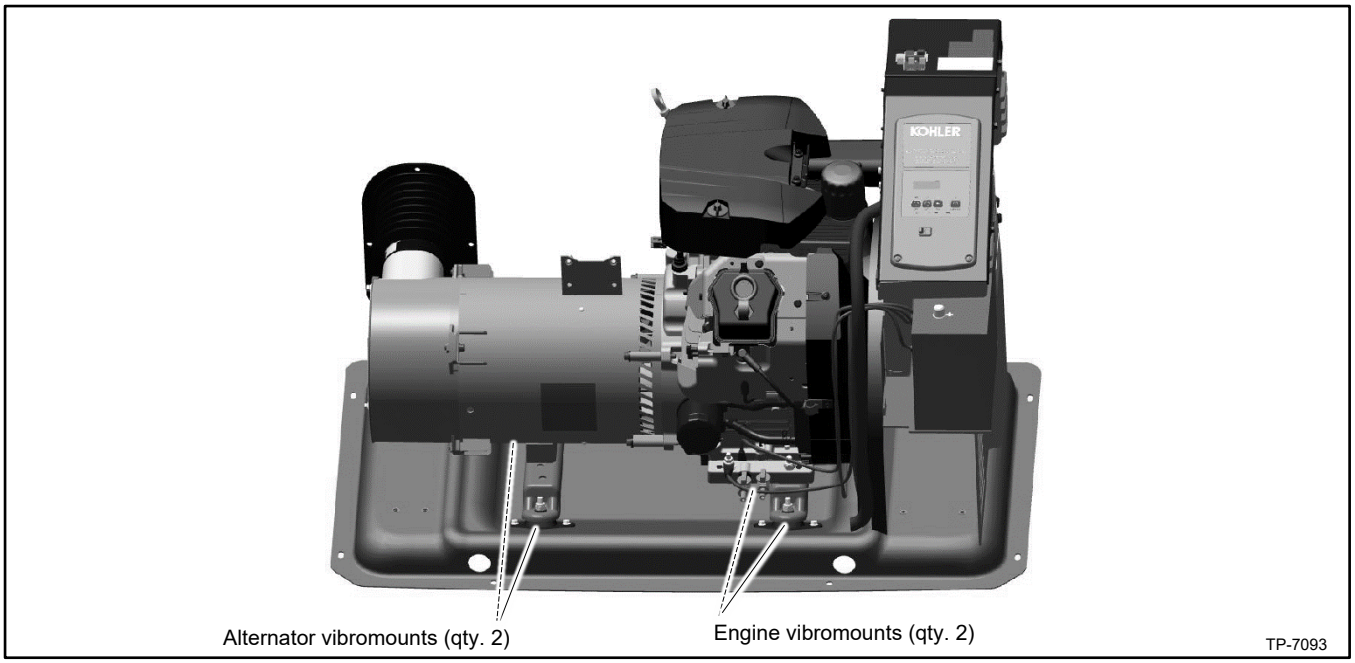

Figure 115 Vibromounts

23. Raise the alternator end of the generator set enough to place a wood support beneath the rear of the engine. The wood support must be long enough to span the opening in the base. See Figure 116.

Note:
The engine lifting eyes are designed to support the weight of the engine only. Do not use the engine lifting eyes to lift the generator set.

Note:
Use a hoist or lifting device that is rated for the weight of the generator set. See the Initial Steps section for approximate weights.

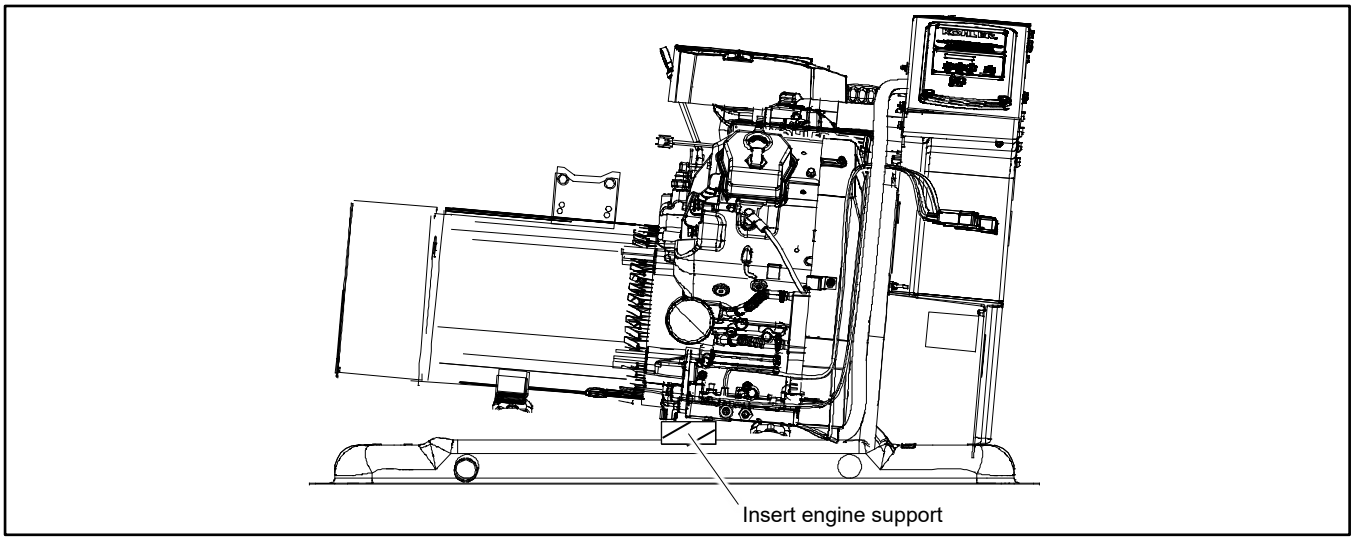

Figure 116 Insert Wood Support for Engine

24. Remove the alternator support bracket from the alternator assembly. See Figure 117.

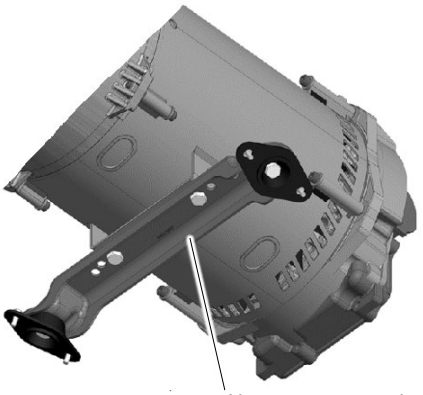

Figure 117 Alternator Support Bracket

Brushes

25. To gain access to the brush assembly, remove the alternator duct cover with reinforcing plate. See Figure 118 and Figure 119.
26. Remove the optional brush cover, if equipped. See Figure 120.
27. Remove the cable tie that attaches the brush leads to the end bracket.

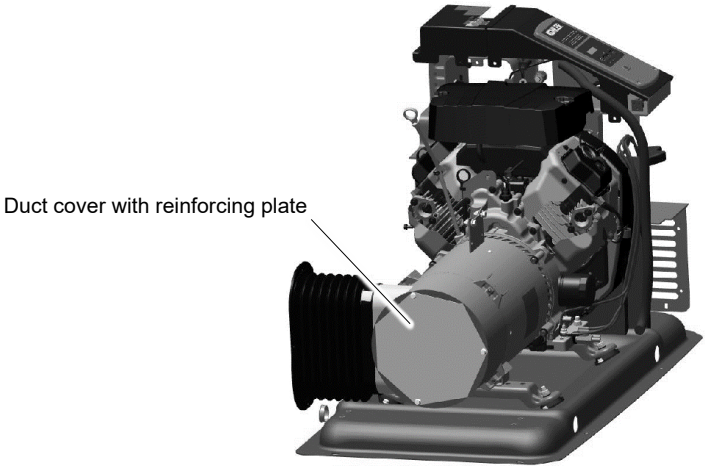

Figure 118 Alternator Duct Cover

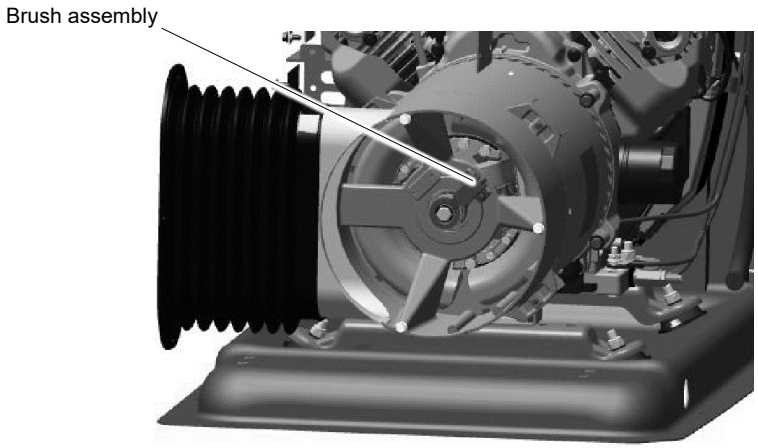

14/20RCA(L) models

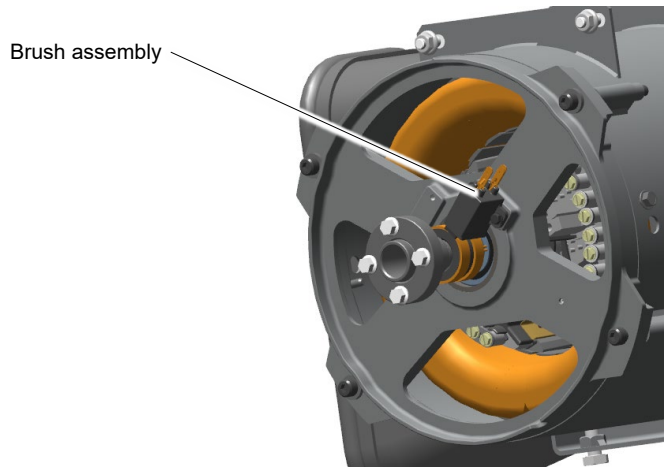

TP-7093

26RCA(L) model

Figure 119 Brush Assembly Location

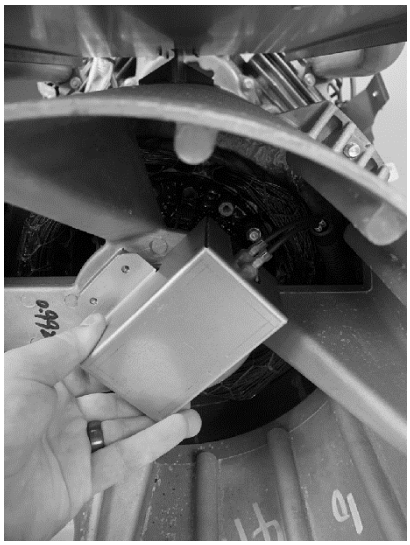

IMG_1055

Figure 120 Brush Cover (optional) 14/20RCA(L) only

28. Check the brushes. See Figure 121.

Note:
The brushes are spring-loaded and captured in the brush holder.

a. Remove the brush holder and any shims from the end bracket by removing two mounting screws. Keep the shims for re-installation later.

b. Inspect the brushes. Replace brushes if they show uneven wear or when they are worn to half of their original size. See the Brushes section.

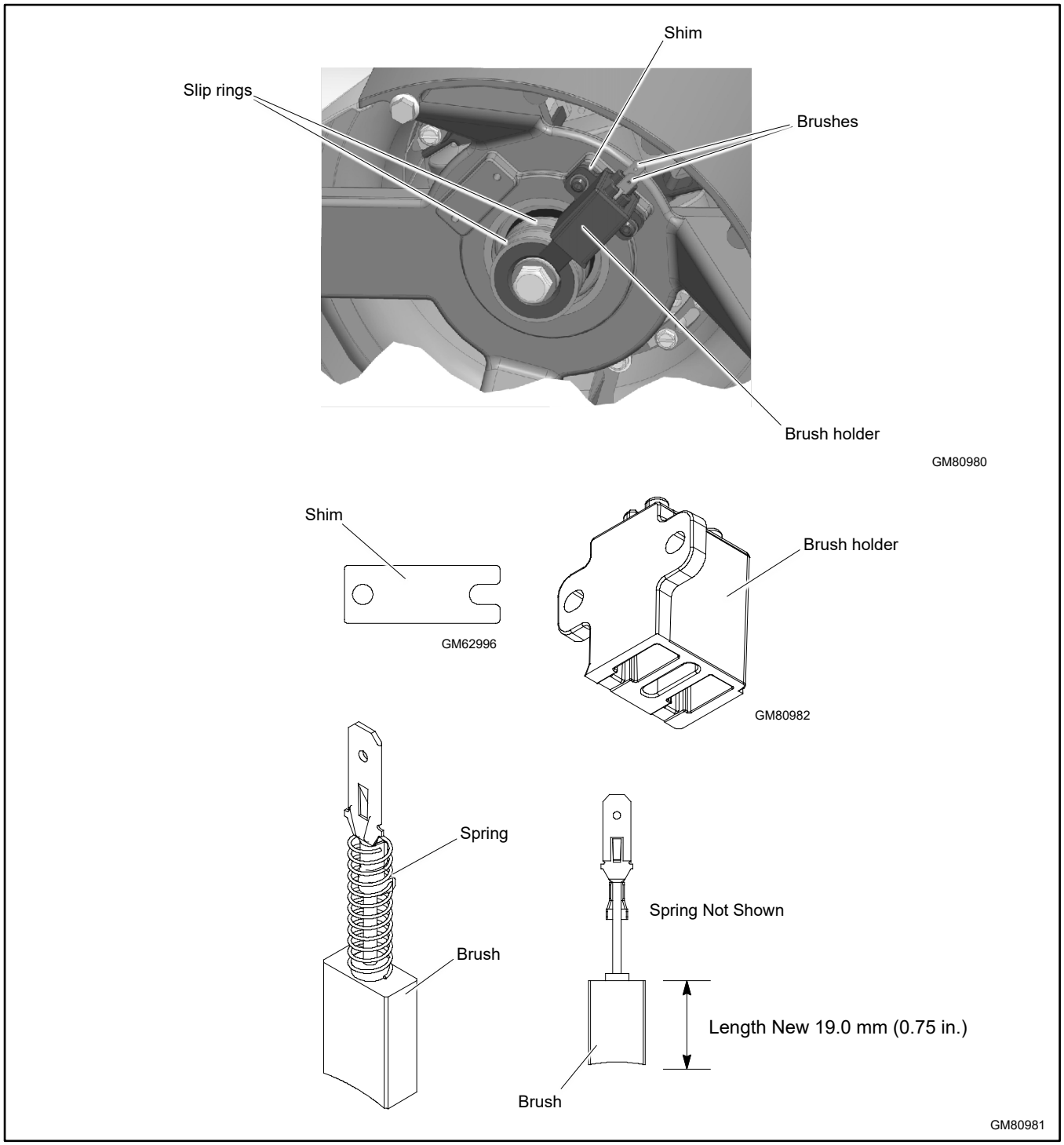

Figure 121 Brush Assembly

Alternator

29. Remove the end bracket assembly by removing four screws shown in Figure 122.

    Note:
    The alternator duct and bellows assembly is attached to the end bracket.

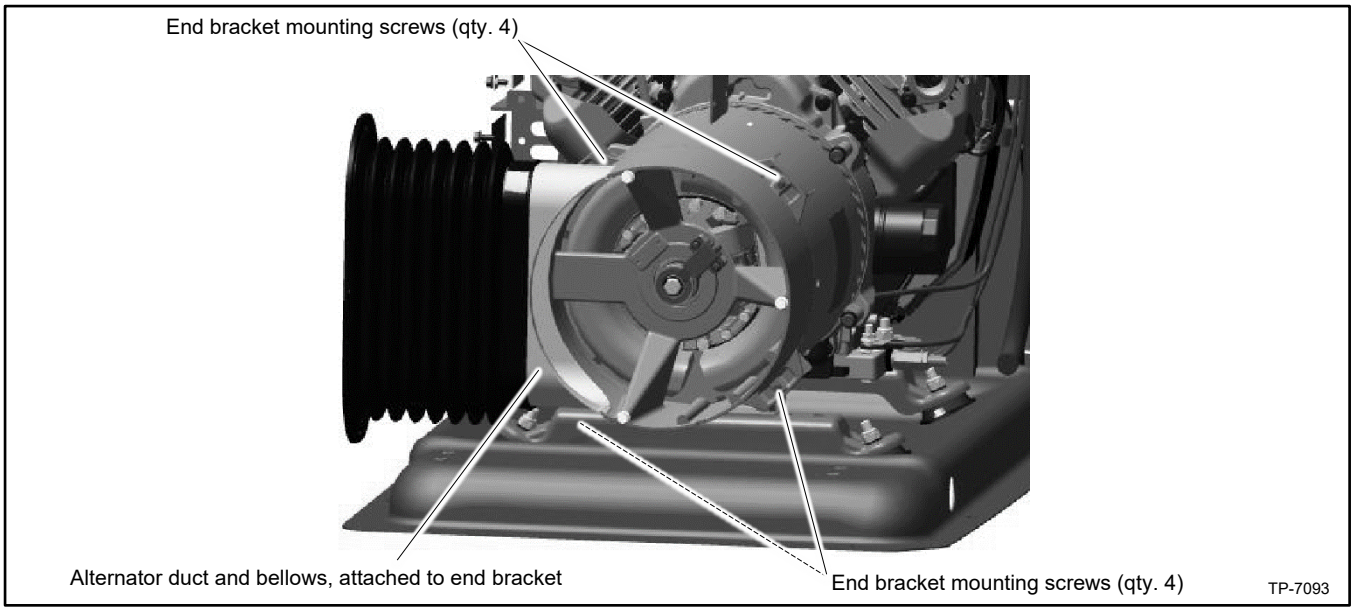

Figure 122 End Bracket Mounting Screws

30. Remove the four mounting bolts and washers that secure the alternator to the engine. See Figure 123.

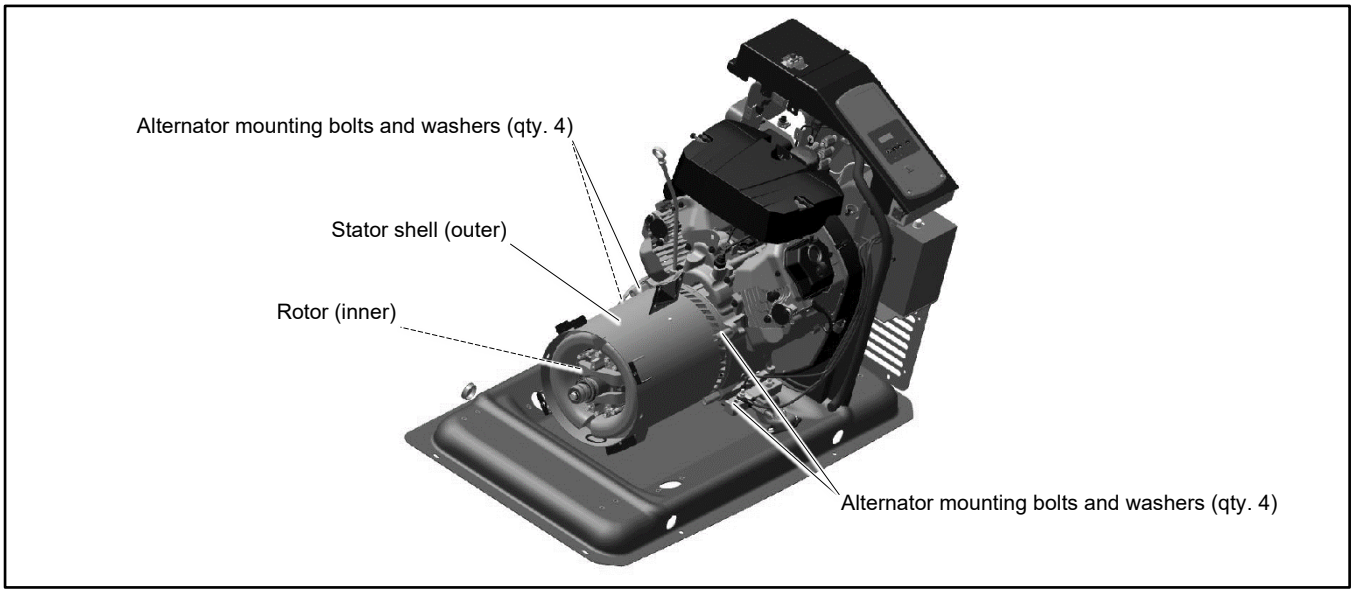

Figure 123 Alternator Mounting Bolts

31. The stator leads are routed through the bulkhead and into the controller junction box. Carefully pull the leads out of the junction box. Pull the leads and conduit out through the bulkhead to free the alternator for removal.

32. Carefully pull the stator from the rotor. See Figure 123.

33. Remove the rotor as follows:

    a. Loosen but do not remove the rotor thrubolt. See Figure 124. Use a strap wrench on the rotor to keep the rotor from turning during loosening, if necessary.

    b. Loosen the rotor assembly by striking the side of the rotor with a soft-faced hammer to loosen it from the tapered crankshaft fitting. Rotate the rotor and strike it on alternate sides until it can be rocked slightly back and forth.

       Note:
       Do not strike the slip rings.

    c. Remove the thrubolt and the rotor. Set the rotor assembly aside.

Note:
If the rotor is difficult to remove, refer to Service Bulletin SB-743, Using a Jacking Bolt to Remove a Rotor. Be sure to follow the instructions carefully.

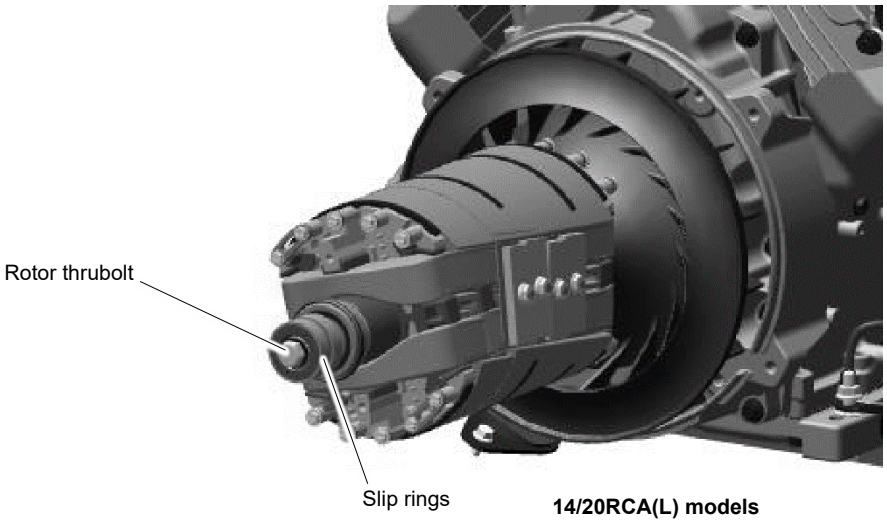

14/20RCA(L) models

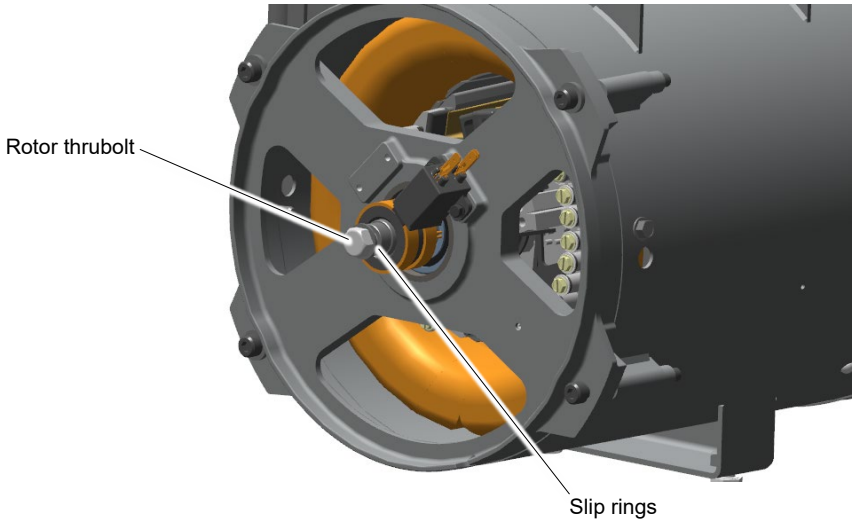

Note:
Do not strike the slip rings when loosening the rotor.

26RCA(L) model

model

Figure 124 Rotor Assembly with Thrubolt

34. 14RCA(L) only: Remove the four generator adapter mounting bolts to remove the generator adapter, if necessary. See Figure 125.

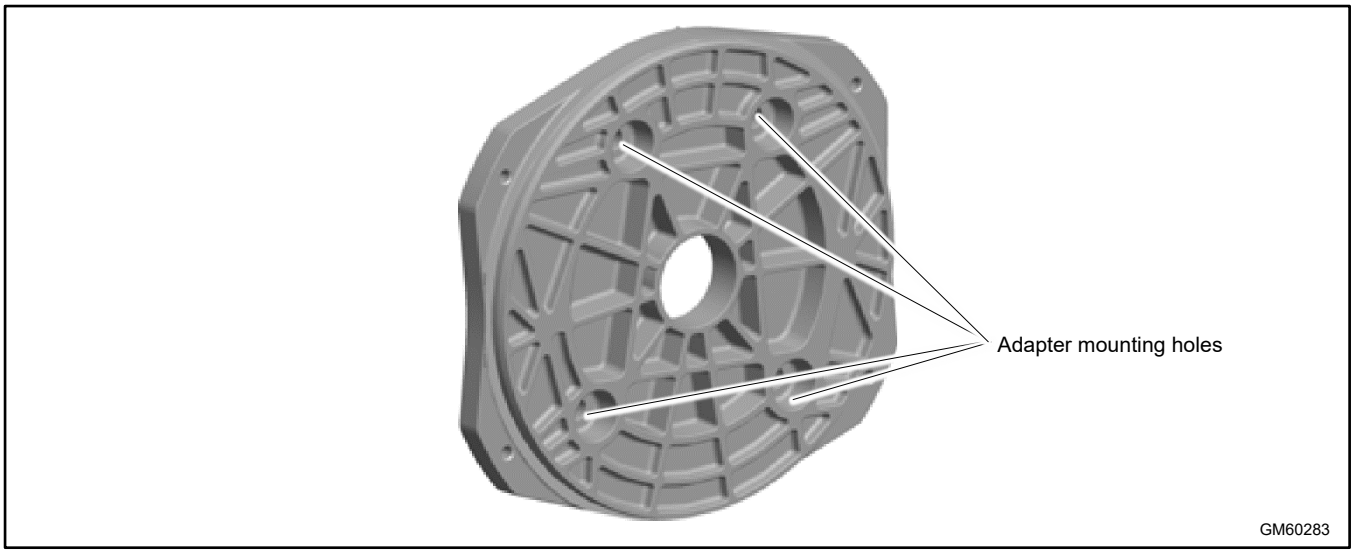

Figure 125 Generator Adapter (14RCA(L))

Engine Service

For engine service information, refer to the engine service manuals.

7.4 Reassembly

7.4.1 Reassemble Alternator

Note:
See the Stator Hardware Change section for information about the stator hardware.

1. 14RCA(L) only: Reinstall the generator adapter onto the engine.

   Note:
   Use Loctite® on the adapter mounting screws.

   a. Attach the generator adapter to the engine using four 7/16-14 x 1.0 in. hex cap screws and washers. See the Generator Adapter (14RCA(L)) figure.

   b. Torque the screws to 40 Nm (28 ft. lb.).

2. Install the rotor assembly. See Figure 126 and Figure 127.

   Note:
   Do not use anti-seize compound when reassembling the rotor.

   a. Clean the crankshaft taper and mating rotor shaft. See Figure 126.

   b. Install the rotor assembly onto the engine crankshaft.

   c. Spin the rotor two revolutions before inserting the thrubolt. Thread the thrubolt with hardened washer through the actuator and rotor into the crankshaft.

3. Tighten the rotor thrubolt to 85 Nm (63 ft. lb.). It may be necessary to keep the engine flywheel from turning while torquing the rotor thrubolt. See Figure 127.

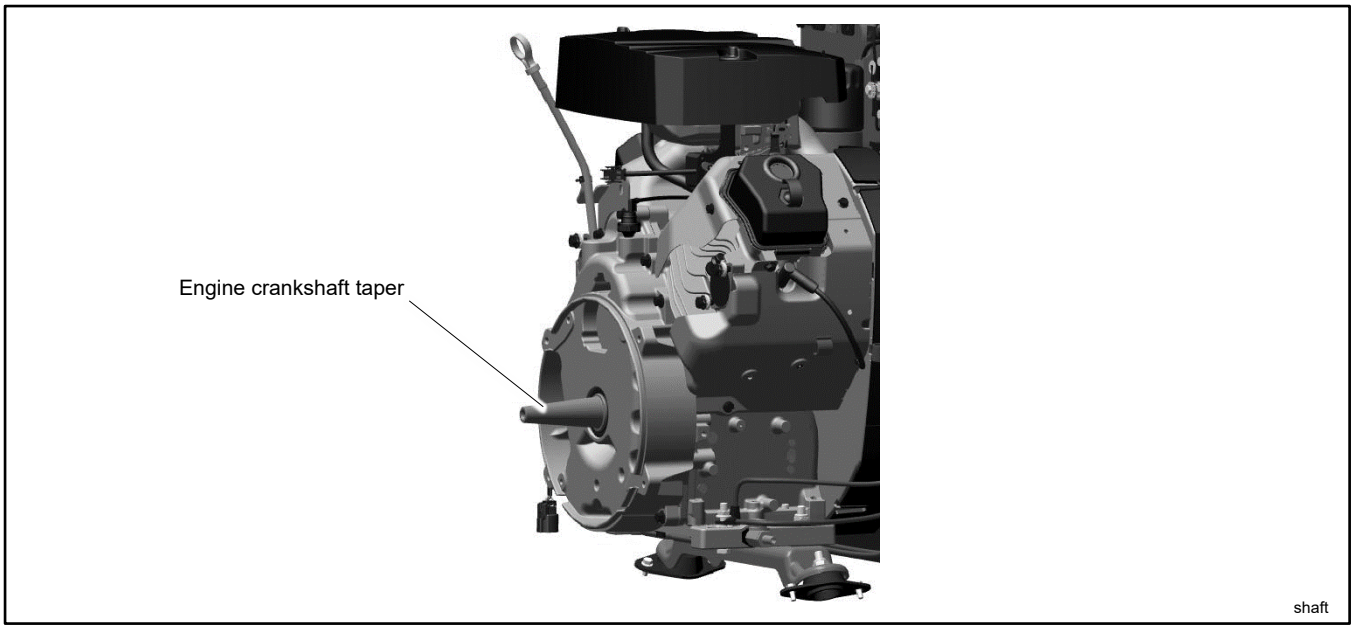

Figure 126 Shaft (20RCA(L) shown)

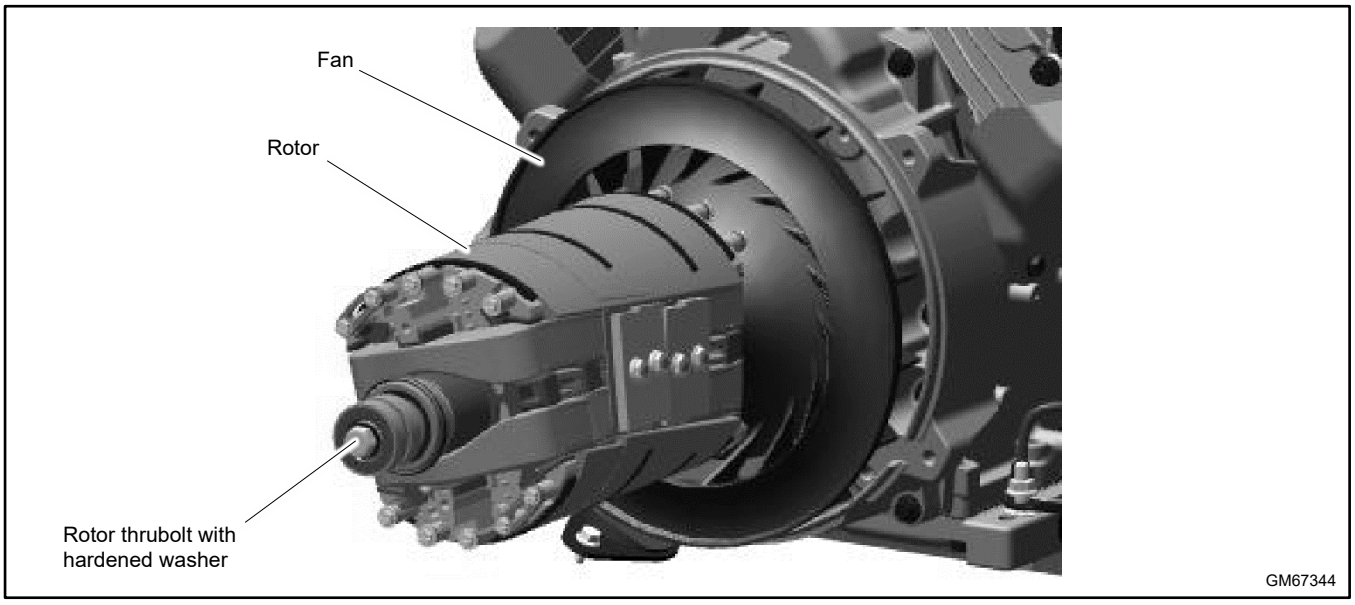

Figure 127 Rotor Assembly

4. Install the stator and end bracket.

   a. Re-attach the alternator support bracket to the alternator shell. Assemble with the part number of the mounting foot toward the engine end of alternator. See Figure 128.

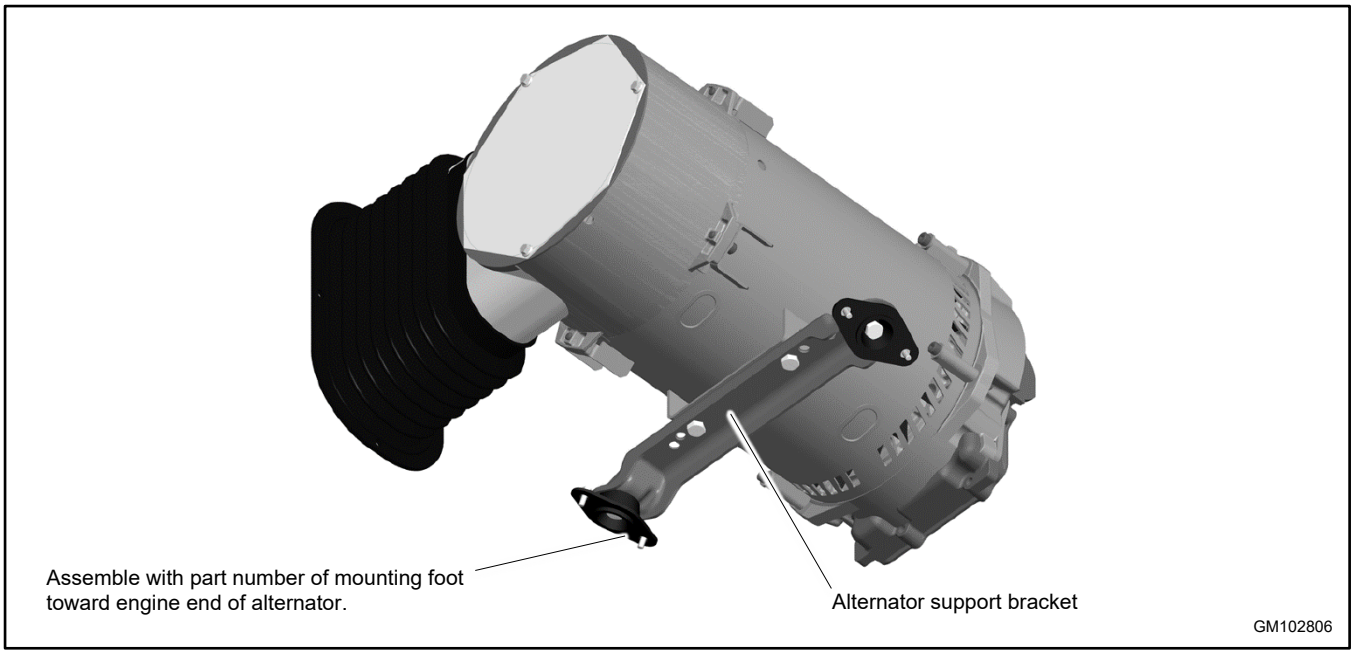

Figure 128 Alternator Support Bracket

   b. Align the stator so that the alternator support bracket is at the bottom. Install the stator assembly around the rotor.

   c. Align the mark on the top of the stator with the center of the slot in the generator adapter. See Figure 129.

   d. Install the four alternator mounting bolts with washers through the end bracket and into the generator adapter. See Figure 130.

      Do not tighten the bolts at this time.

   e. Route the leads connected to the alternator end bracket through the opening in the base of the alternator frame.

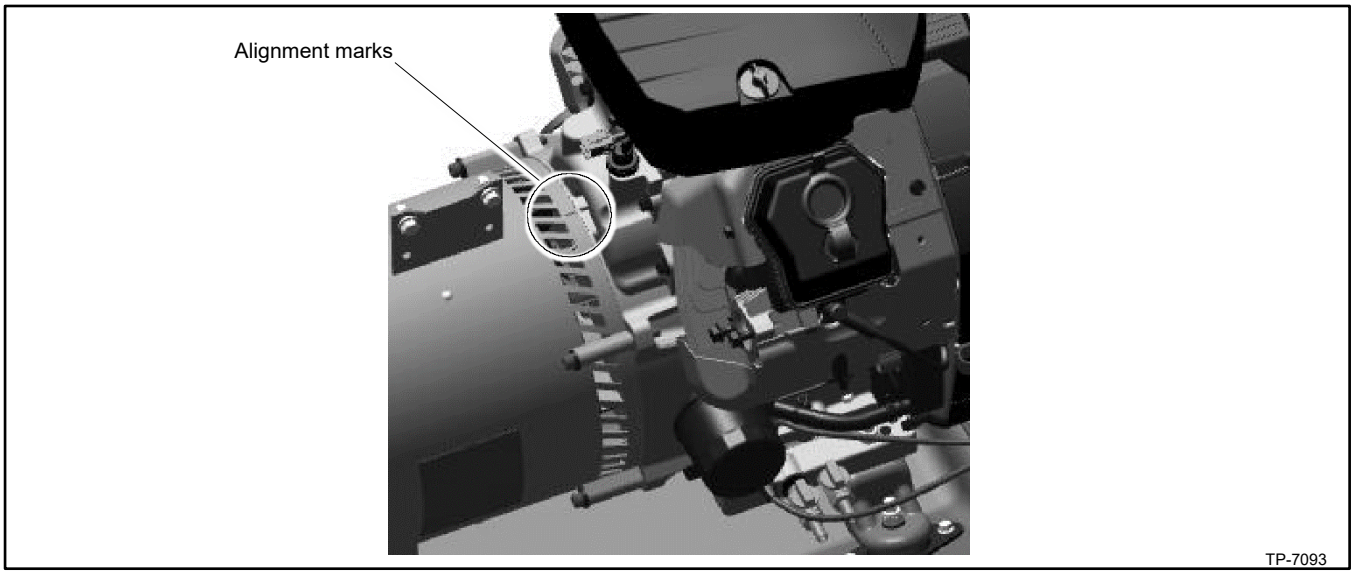

Figure 129 Alternator Alignment Marks

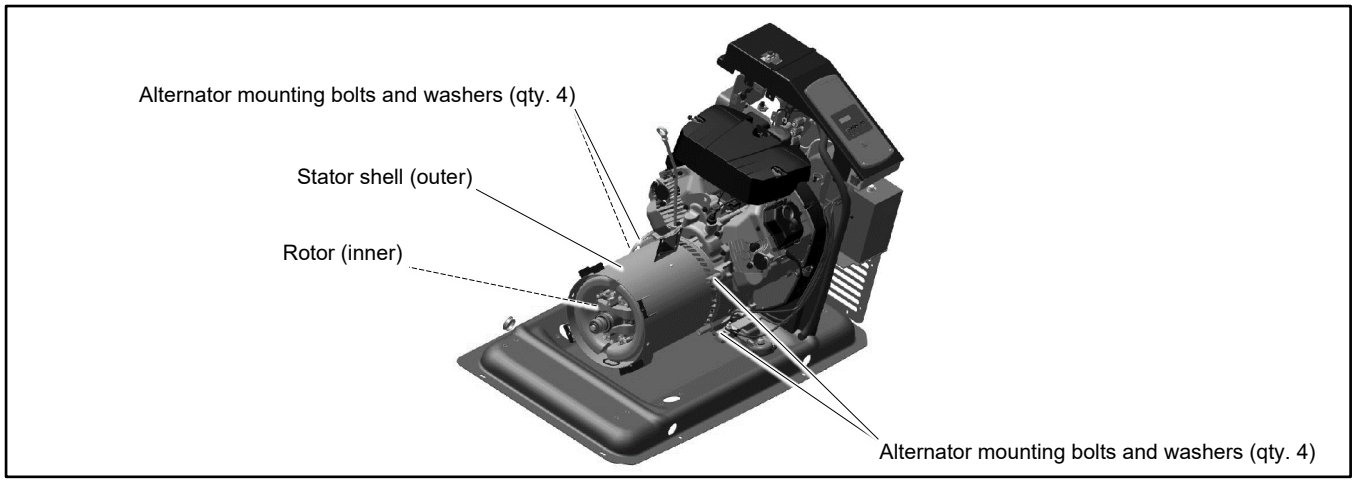

Figure 130 Alternator Mounting Bolts

5. Secure the generator set to the skid.

   a. Raise the alternator end of the generator set and remove the wood support block(s).

   b. Lower the end of the generator set and reinstall the screws and washers that secure the vibromounts to the skid. Tighten all four vibromounts (for the alternator and engine) to 5.4 Nm (4 ft. lbs.). Do not over-tighten. See Figure 131.

6. Tighten the four alternator mounting bolts to 14.9 Nm (11 ft. lb.).

   Note:
   Use a star pattern sequence when tightening the bolts, and tighten the bolts twice. See Figure 132.

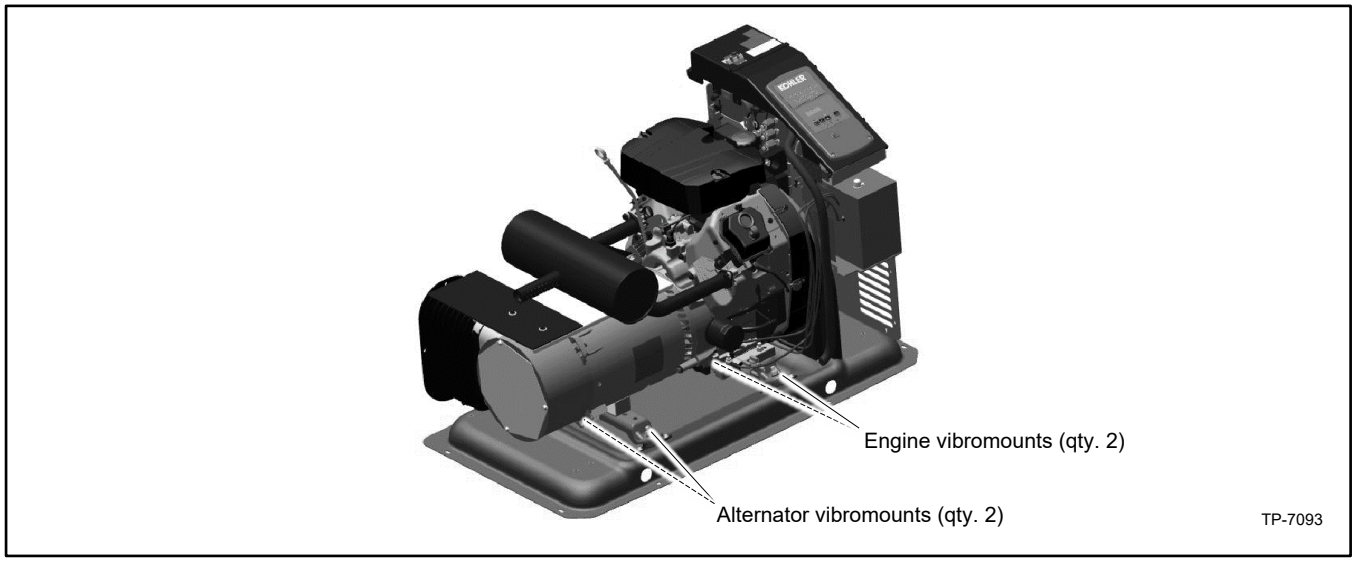

Figure 131 Vibromounts

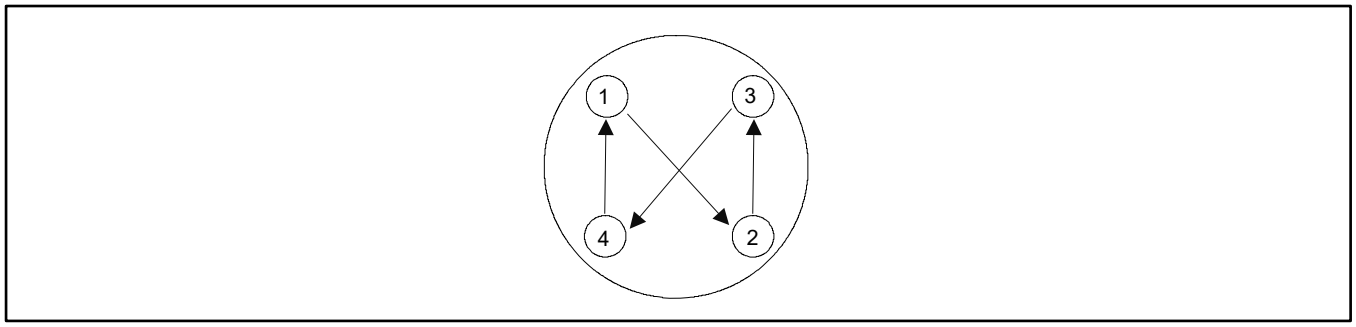

Figure 132 Bolt Tightening Sequence

7. Install the end bracket.

   Note:
   See the Stator Hardware Change section for information about the stator hardware.

   a. Clean the bearing and the end bracket bore before assembly.

   b. Place the end bracket onto the stator assembly, using your hands to make the initial fitting of the end bracket over the bearing. See Figure 133.

      Note:
      The opening for the alternator duct must be on the left side as you face the alternator end. Refer to Figure 135.

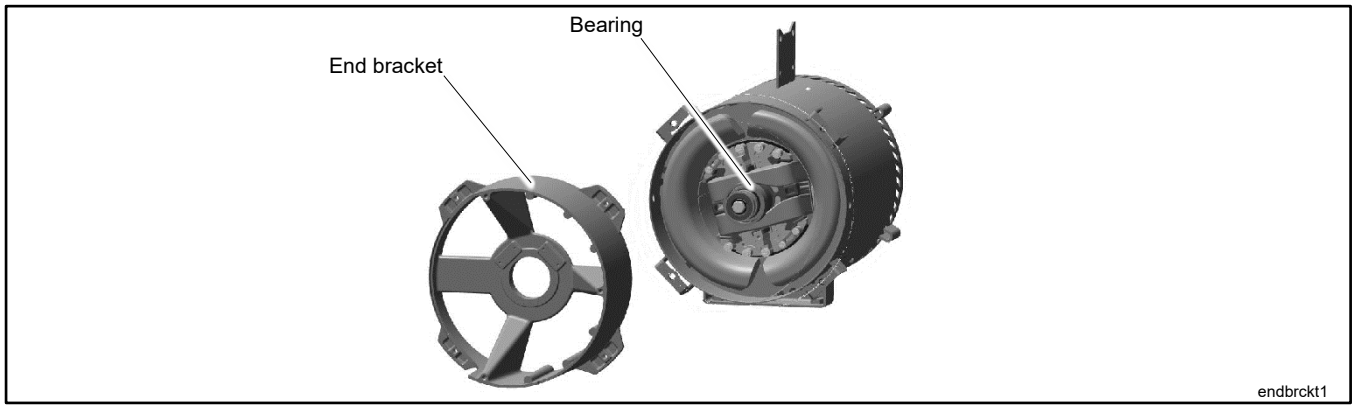

Figure 133 End Bracket and Bearing

   c. Use a hard rubber or dead-blow hammer to strike the end bracket in a circular pattern to ease the end bracket over the bearing until the end bracket pilot seat is against the stator pilot seat. See Figure 134.

      Note:
      Be careful to avoid striking the slip rings.

   d. Install four end bracket mounting screws and tighten to 23 Nm (17 ft. lbs).

      Note:
      Use a star pattern sequence when tightening the screws, and tighten the screws twice. See Figure 132.

   e. Verify that there is no clearance between the end bracket and the stator seat.

   f. After the bolts are tightened, strike the bracket at locations A through D to relieve any residual stress. See Figure 134.

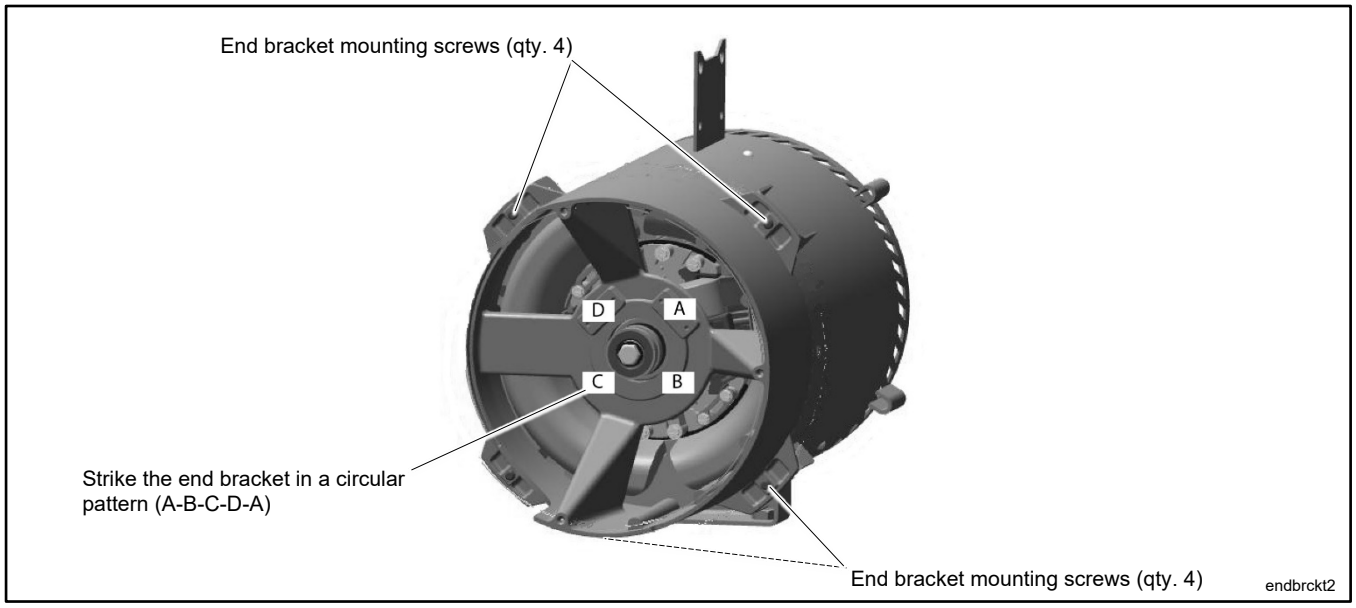

Figure 134 End Bracket Installation

8. Install the alternator duct and bellows as shown in Figure 135.

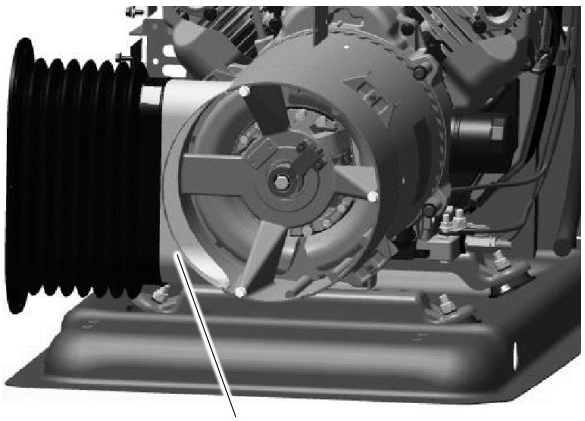

Figure 135 Alternator Duct and Bellows Installation

9. Reinstall the end bracket components.

   a. Inspect the brushes. If brushes show uneven wear or are worn to less than half their original length, replace them. See the Brushes section.

   b. Install the brush holder with shim onto the end bracket. Verify that the brushes are not sticking in the holder.

   c. Verify that the brushes are centered on the slip rings. If required, insert spacers between the mounting surface and brush holder to center the brushes on the slip rings. See Figure 138. See the Brushes section for more information.

   d. Use the cable tie to secure the brush leads to the end bracket.

   e. Reinstall the optional brush cover, if equipped. See Figure 137.

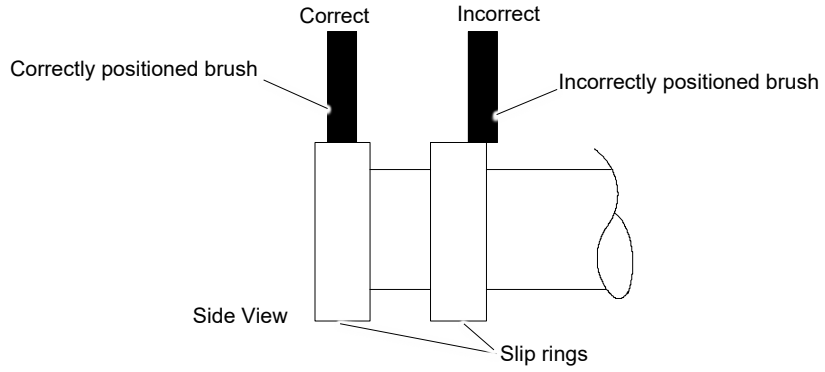

Figure 136 Brush Position

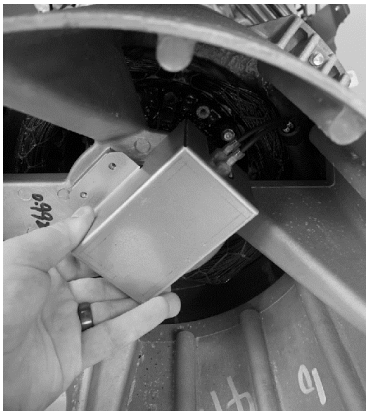

Figure 137 Optional Brush Cover

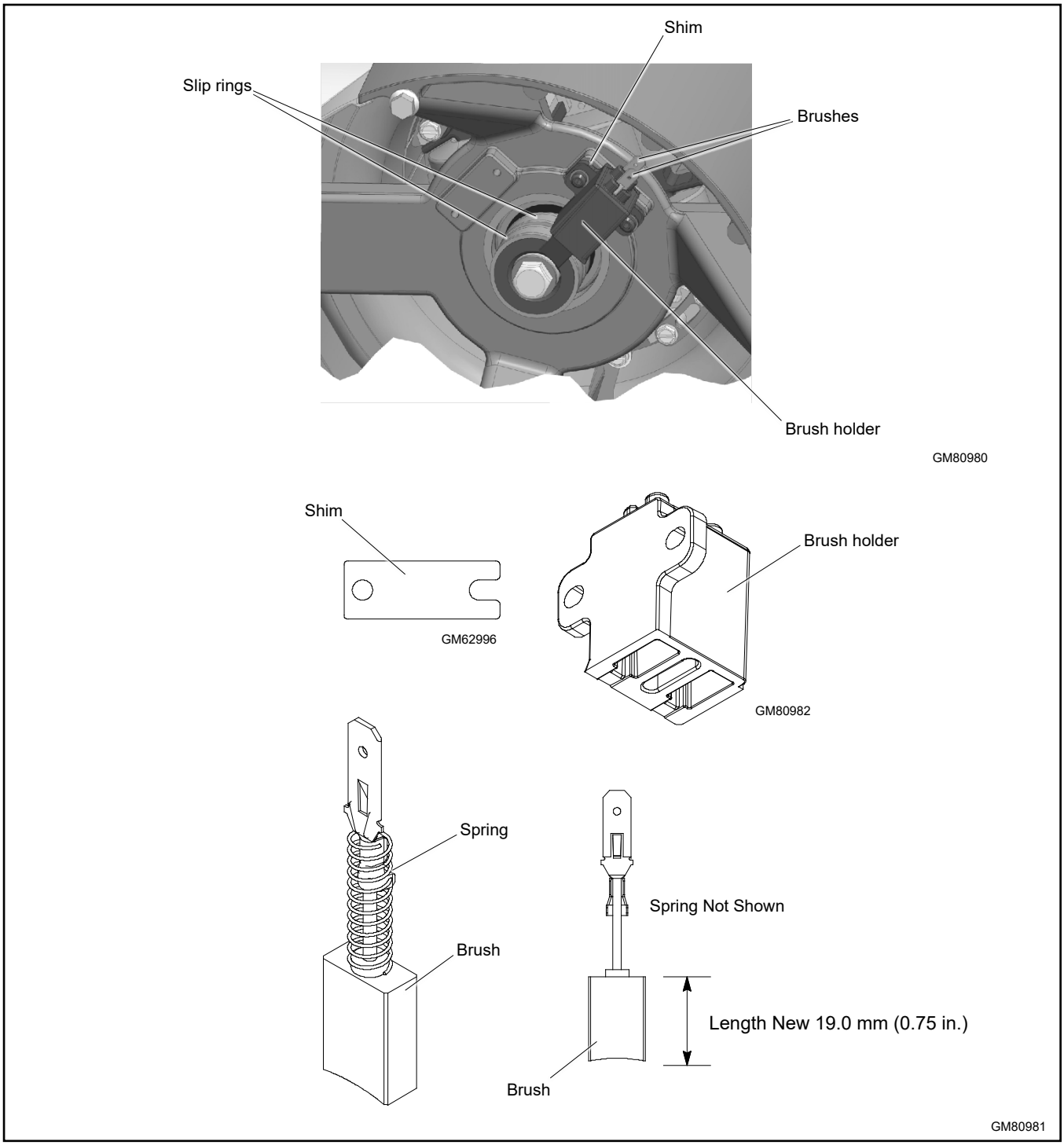

Figure 138 Brush Assembly

7.4.2 Reassemble Exhaust System

10. Install the exhaust system. See Figure 139.

    Note:
    Use new exhaust gaskets when re-installing the muffler.

    a. Install the heat shields onto the alternator exhaust support.

    b. Using new gaskets, connect the engine exhaust muffler to the engine at the flanges. Do not final tighten the mounting hardware.

    c. Secure the muffler mounting tab to the heat shield.

    d. Torque the nuts securing the engine muffler flanges to the engine to 24 Nm (17.7 ft. lb.).

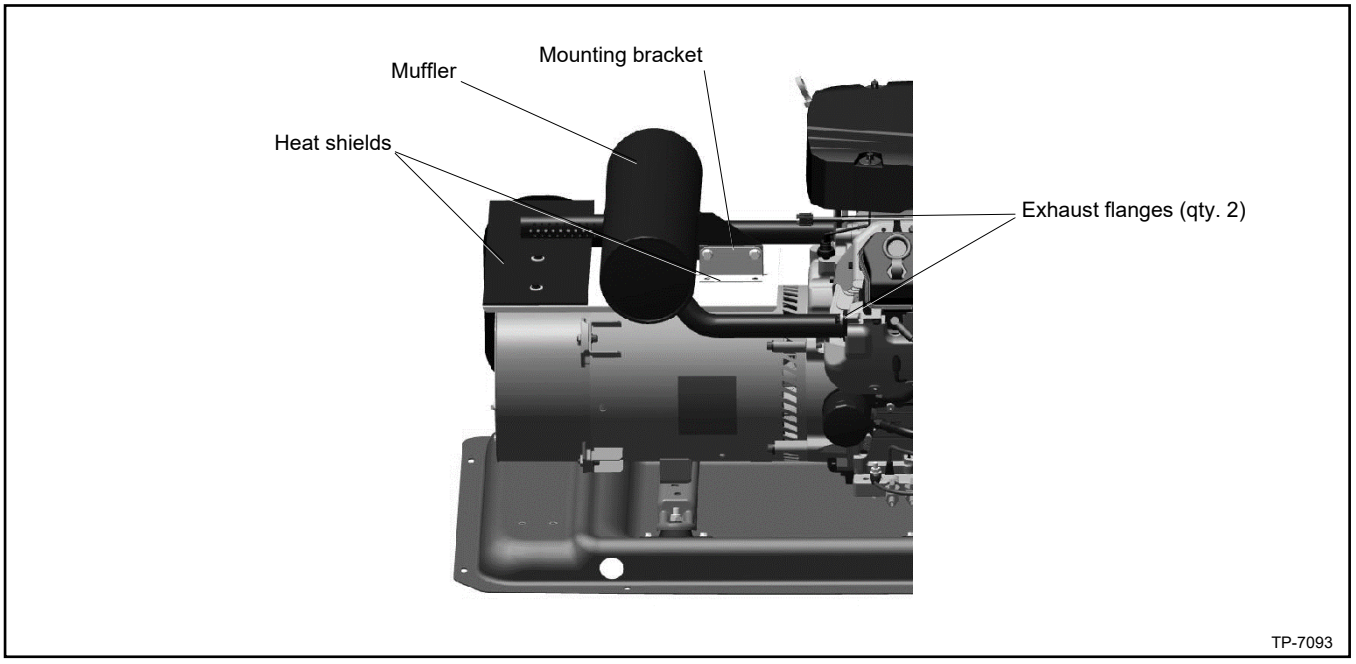

Figure 139 Muffler and Heat Shields

7.4.3 Reinstall Enclosure

11. Reinstall the rear bulkhead assembly shown in Figure 140.

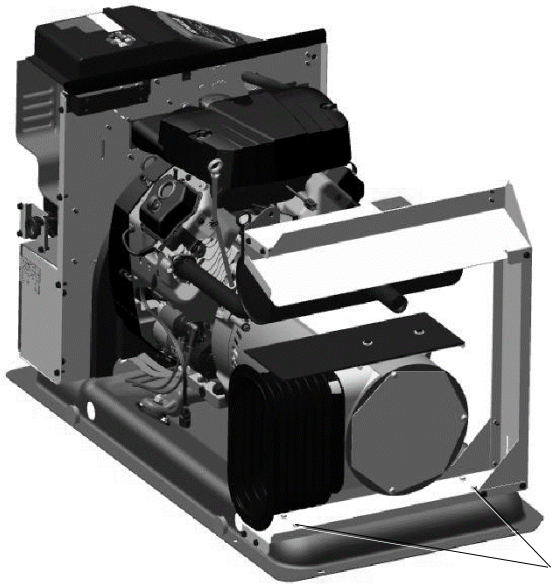

Figure 140 Rear Bulkhead

12. Place the left side panel into position. See Figure 141.
13. Install four screws that secure the left side panel to the bulkhead. See Figure 141.
14. Install two screws that secure the left side panel to the top of the rear bulkhead on the alternator end.
15. Install four screws securing the alternator bellows to the panel.
16. Reconnect any electrical leads that enter the enclosure through the panel. Reinstall conduit that was removed.
17. Reconnect the fuel line.

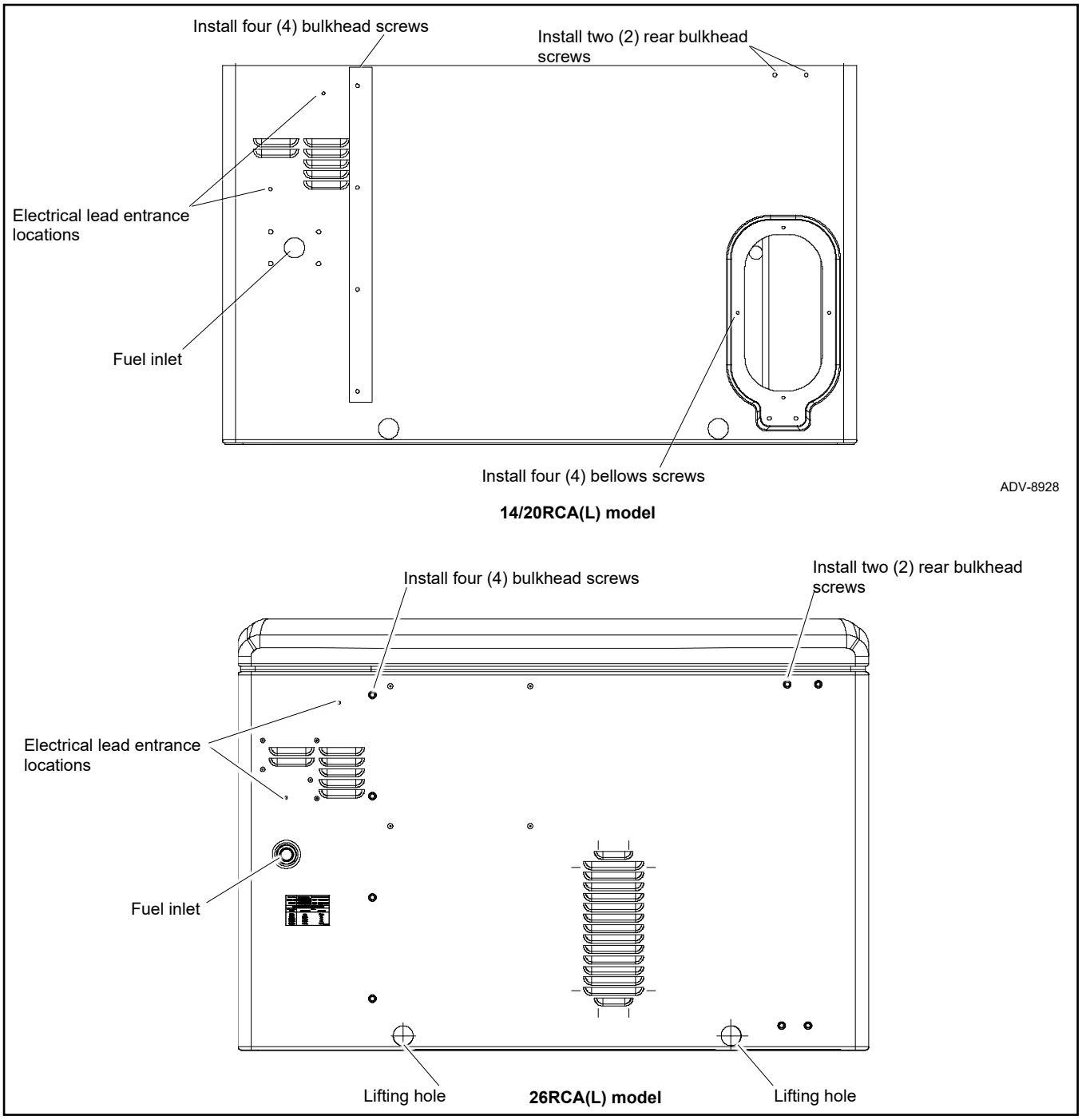

Figure 141 Left Side Panel

18. Reconnect the following alternator wiring inside the controller junction box. See the wiring diagrams section.
    a. Reconnect lead 55 to the mini-breaker on the controller.
    b. Reconnect P2 to the controller.
    c. Reconnect leads 2 and 3 to neutral stud L0.
    d. Reconnect leads 1 and 4 to the circuit breaker.
    e. Reconnect any other controller connections that were removed during disassembly.
19. Press the OFF button on the generator set controller.

DANGER	Hazardous voltage. **Will cause severe injury or death.** This equipment must be installed and serviced by qualified electrical personnel.

Connecting the battery and the battery charger. Hazardous voltage will cause severe injury or death. Reconnect the battery correctly, positive to positive and negative to negative, to avoid electrical shock and damage to the battery charger and battery(ies). Have a qualified electrician install the battery(ies).

20. Reconnect the generator set engine starting battery, negative (-) lead last.
21. Plug the accessories (if equipped) into the AC power receptacle.
22. Reconnect the utility power to the generator set.
23. Reconnect output leads or load circuit cables at the field-connection terminal block.
24. Reinstall the remaining enclosure panels in reverse order of removal. See Figure 142 and refer to the disassembly instructions, if necessary.
    a. Install the right-side panel.
    b. Install the exhaust end panel.
    c. Install the front panel.
    d. Install the generator set housing roof.
25. Re-apply the 120VAC power supply to the generator set by closing the upstream circuit breaker.
26. Turn on the fuel supply. Press RUN to start the generator set and check for leaks with the engine running.
27. Press OFF to turn off the generator set. Then press AUTO if an automatic transfer switch or remote start/stop switch is used.
28. Lower and secure the roof.

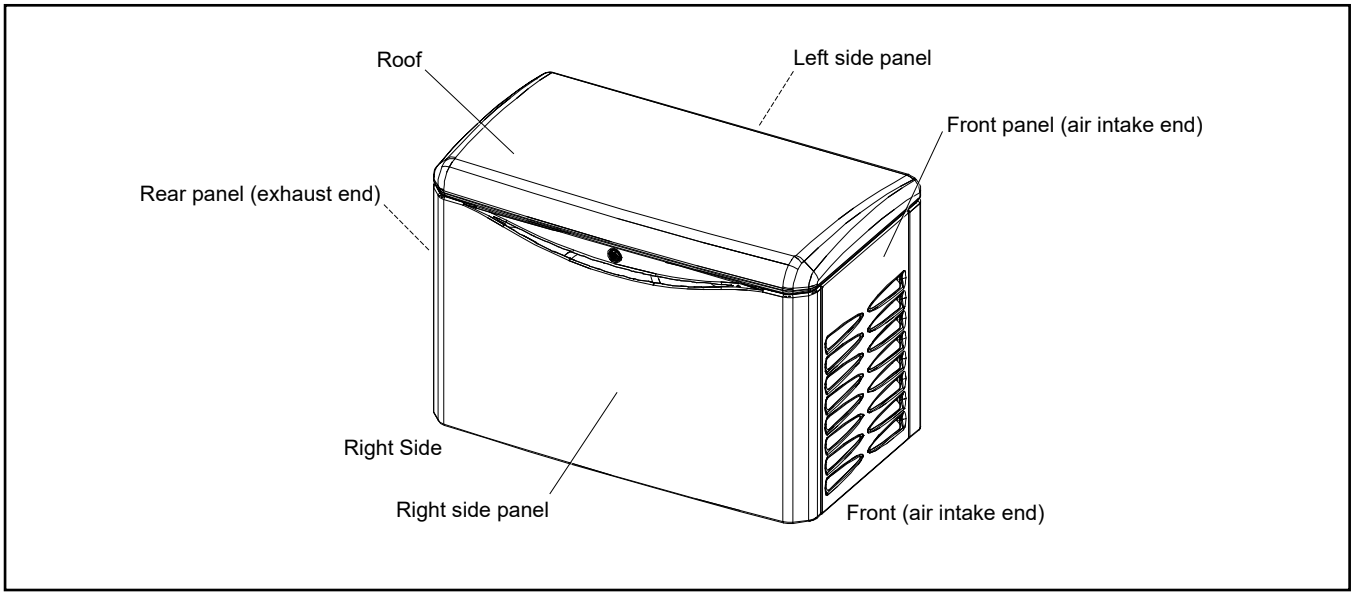

Figure 142 Generator Set Enclosure

Notes

Figure 143 lists the drawing numbers and page numbers.

Wiring Diagrams	Drawing Number	Page
14/20RCA(L) Schematic Diagram	ADV-8956	
Harnesses and cables	Sheet 1	178
1 phase, 2 pole circuit breaker	Sheet 2	179
1 phase, 1 pole circuit breaker	Sheet 3	180
3 phase, 3 pole circuit breaker	Sheet 4	181
26RCA(L) Schematic Diagram	ADV-9909	
Harnesses and cables	Sheet 1	182
1 phase, 2 pole circuit breaker	Sheet 2	183
1 phase, 1 pole circuit breaker	Sheet 3	184
3 phase, 3 pole circuit breaker	Sheet 4	185
14/20RCA(L) Wiring Diagram	GM102647	
1 phase, 2 pole circuit breaker	Sheet 1	186
1 phase, 1 pole circuit breaker	Sheet 2	187
3 phase, 3 pole circuit breaker	Sheet 3	189
26RCA(L) Wiring Diagram	GM118674	
1 phase, 2 pole circuit breaker	Sheet 1	190
1 phase, 1 pole circuit breaker	Sheet 2	191
3 phase, 3 pole circuit breaker	Sheet 3	192

Figure 143 Drawings and Diagrams

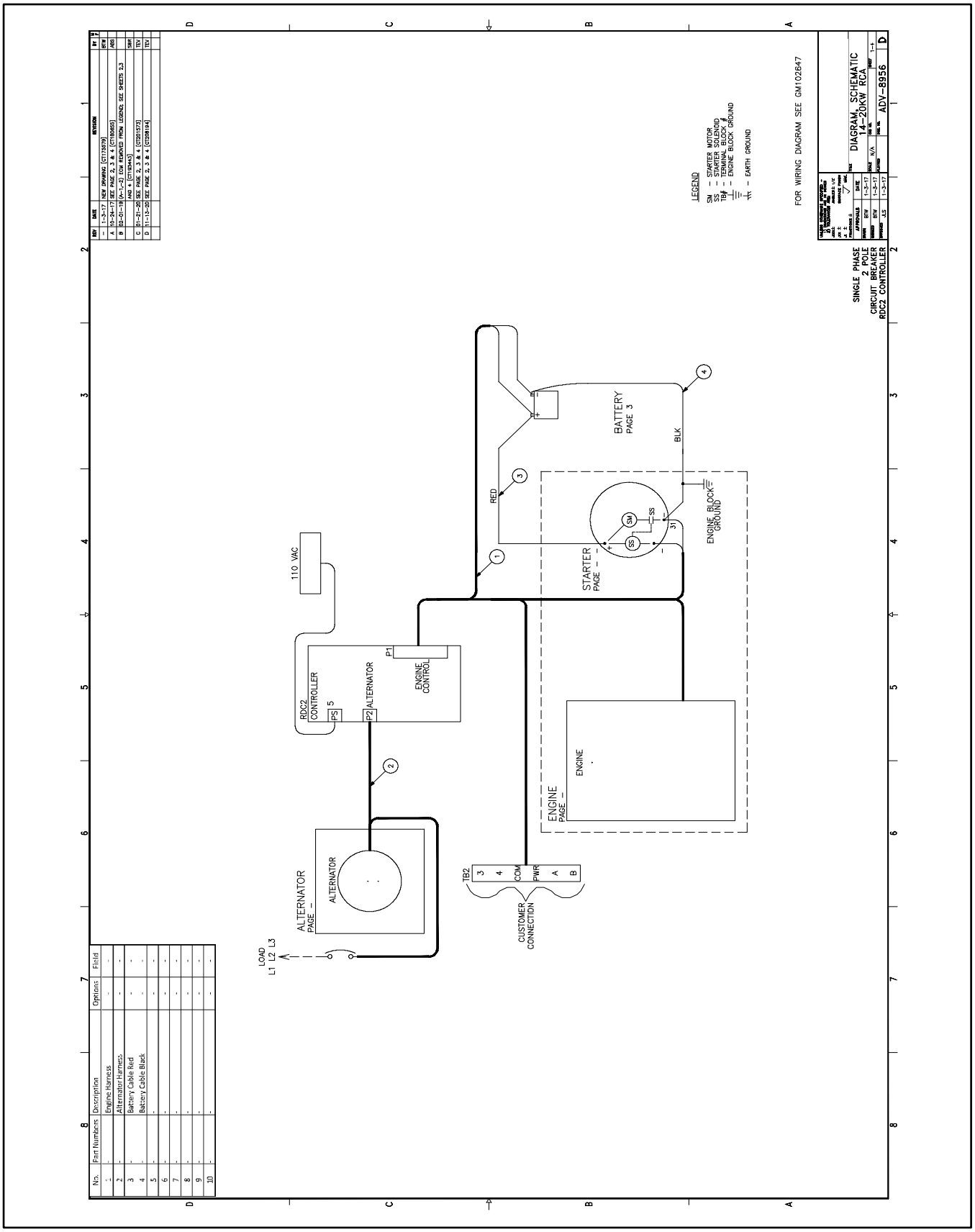

Figure 144 Schematic Diagram, ADV-8956, Sheet 1

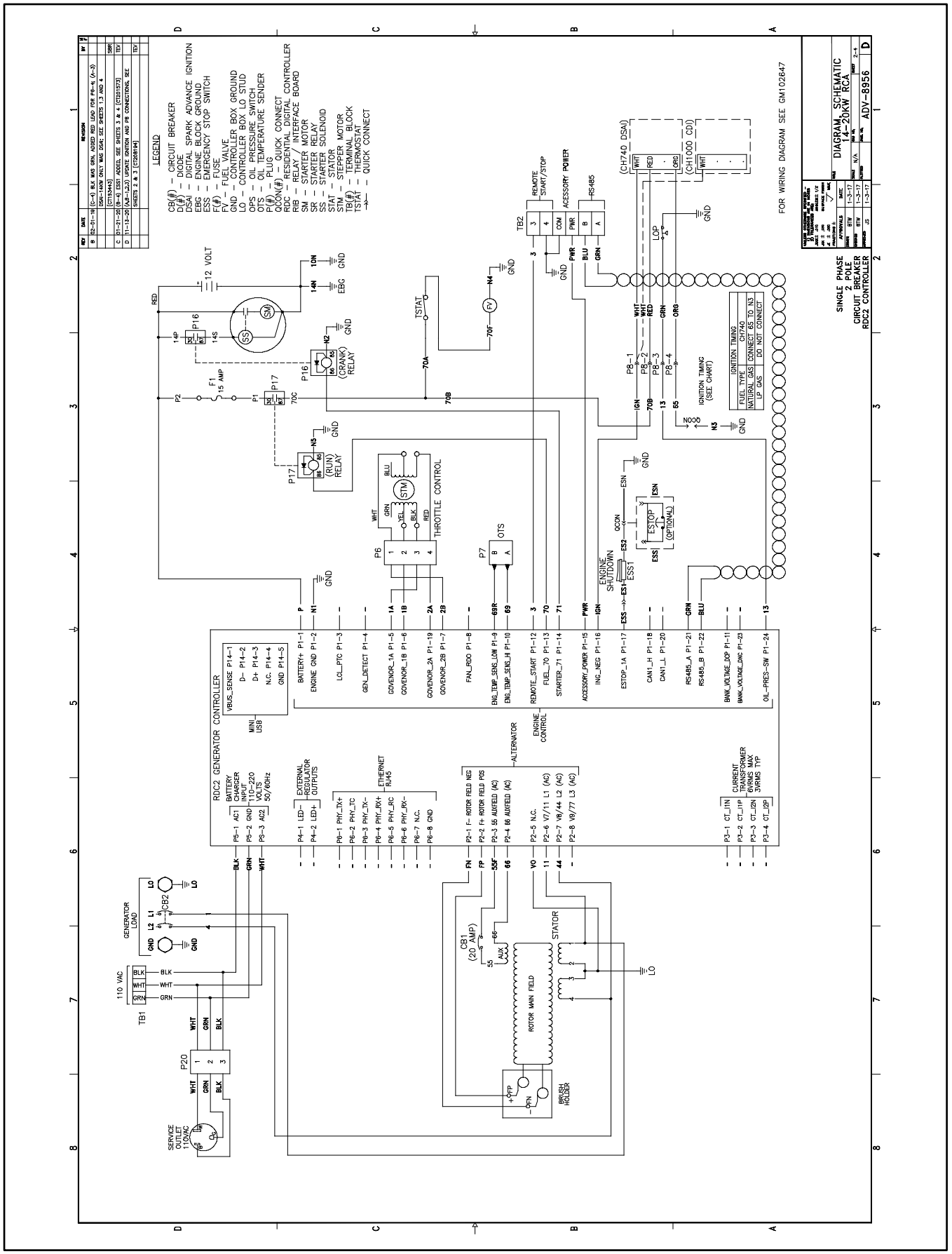

Figure 145 Schematic Diagram, ADV-8956, Sheet 2

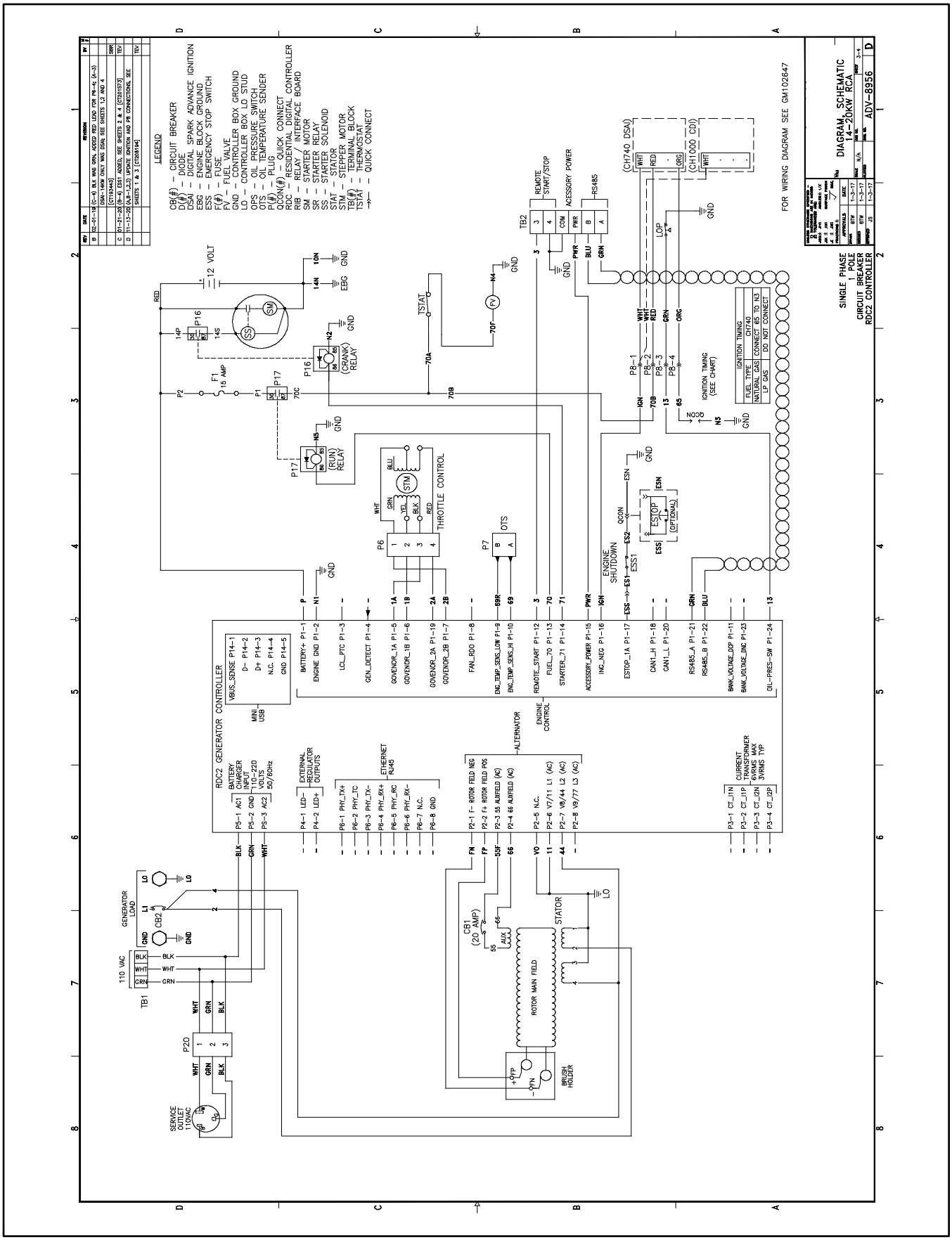

Figure 146 Schematic Diagram, ADV-8956, Sheet 3

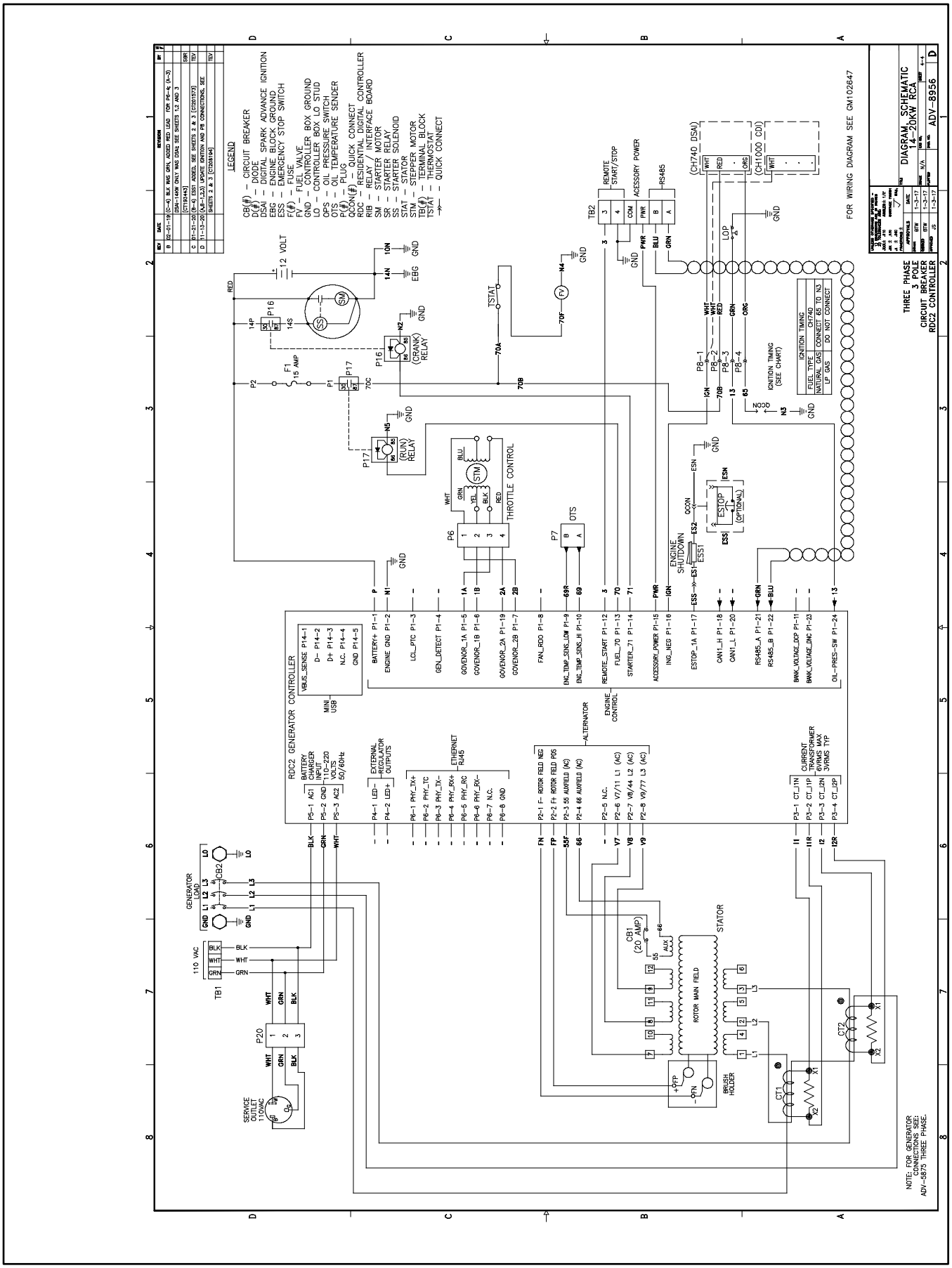

Figure 147 Schematic Diagram, ADV-8956, Sheet 4

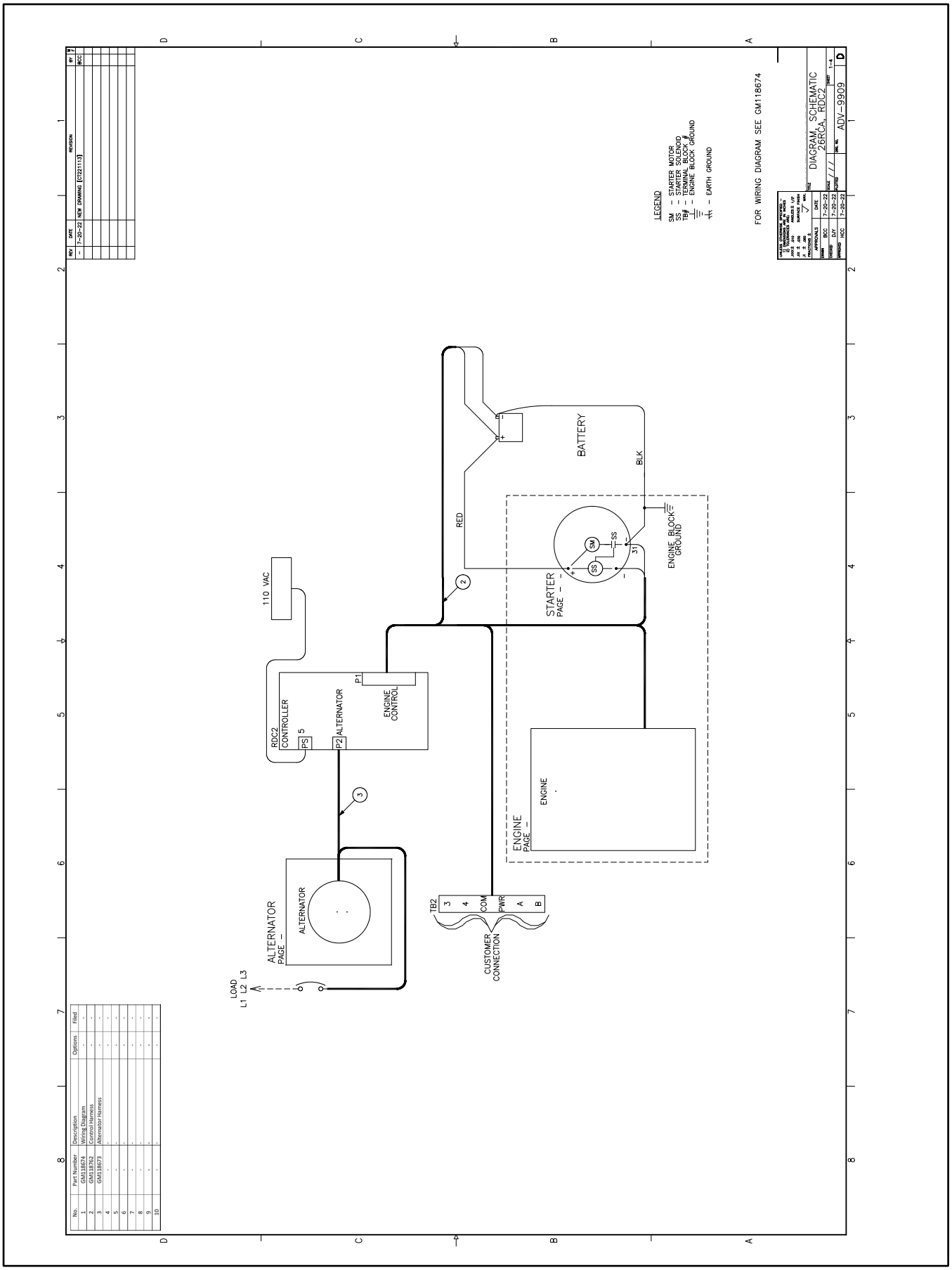

Figure 148 Schematic Diagram, ADV-9909, Sheet 1

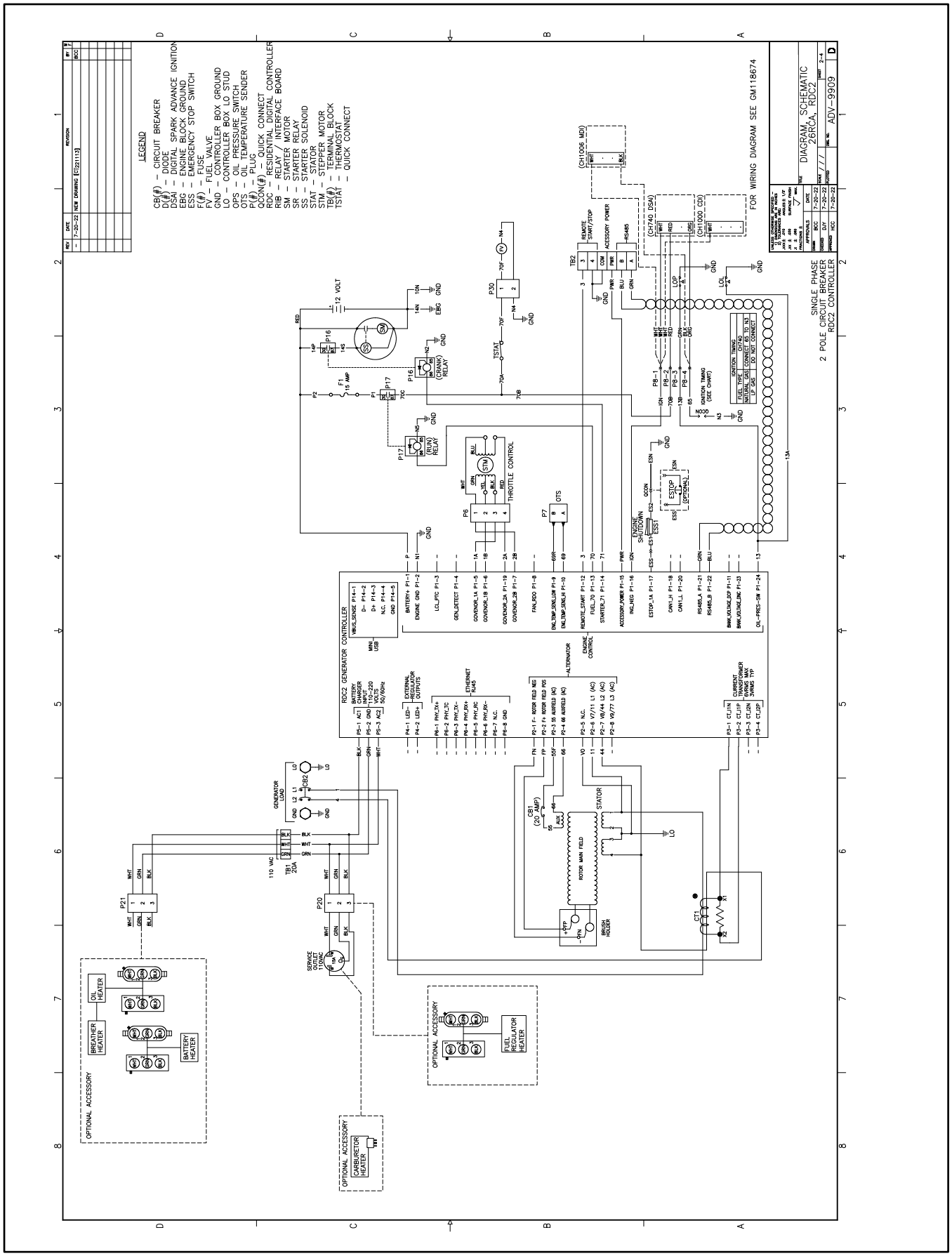

Figure 149 Schematic Diagram, ADV-9909, Sheet 2

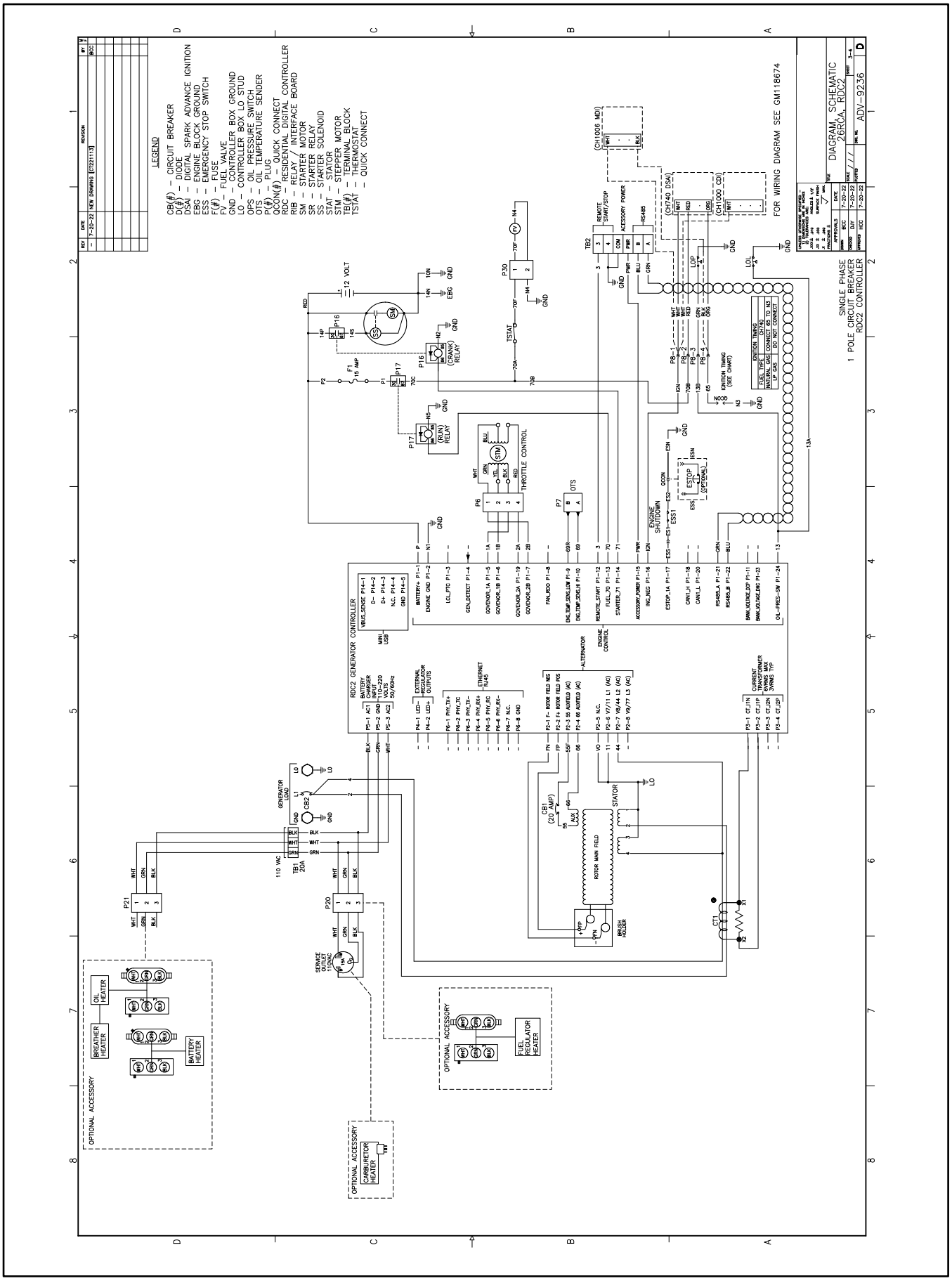

Figure 150 Schematic Diagram, ADV-9909, Sheet 3

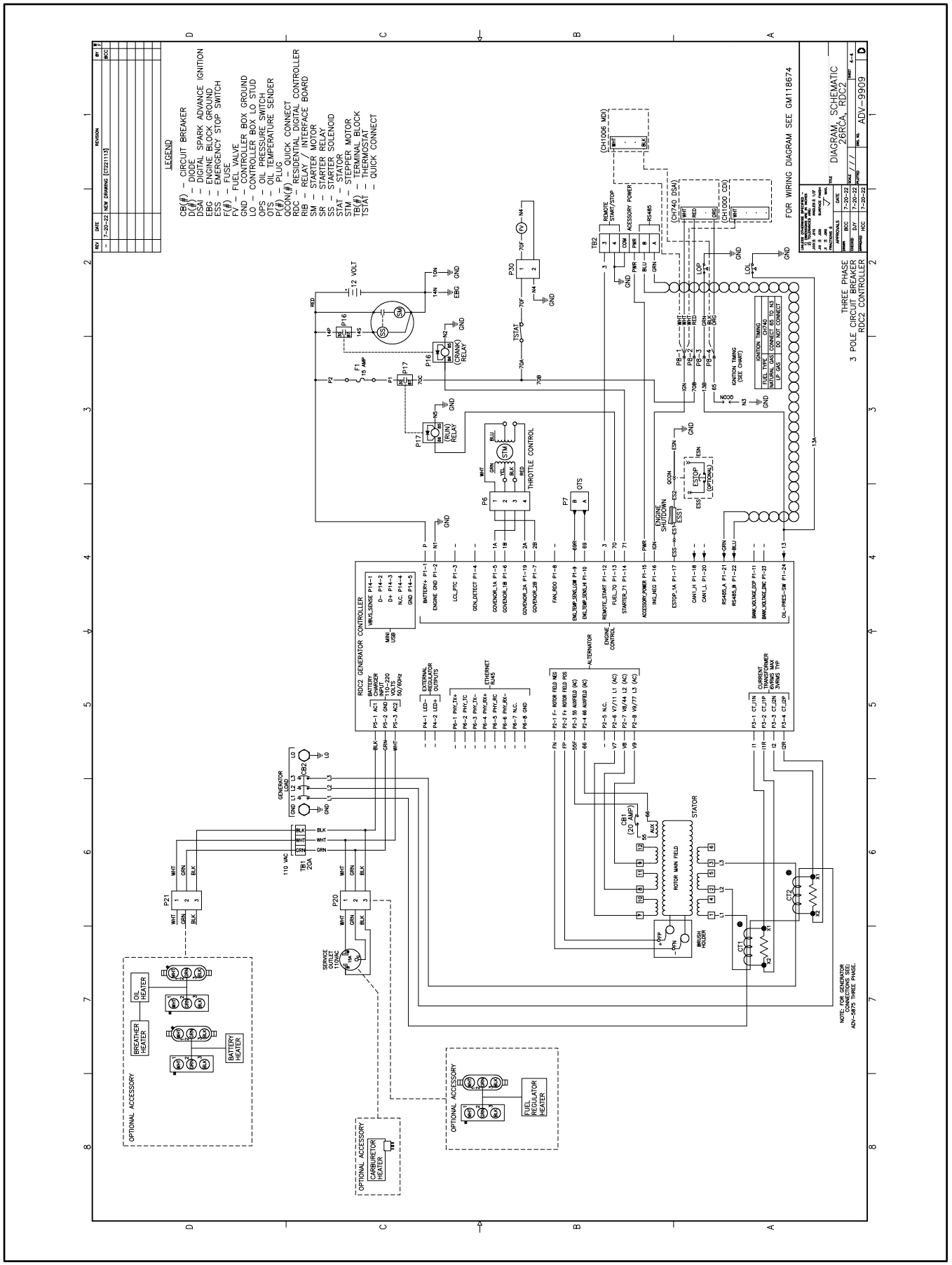

Figure 151 Schematic Diagram, ADV-9909, Sheet 4

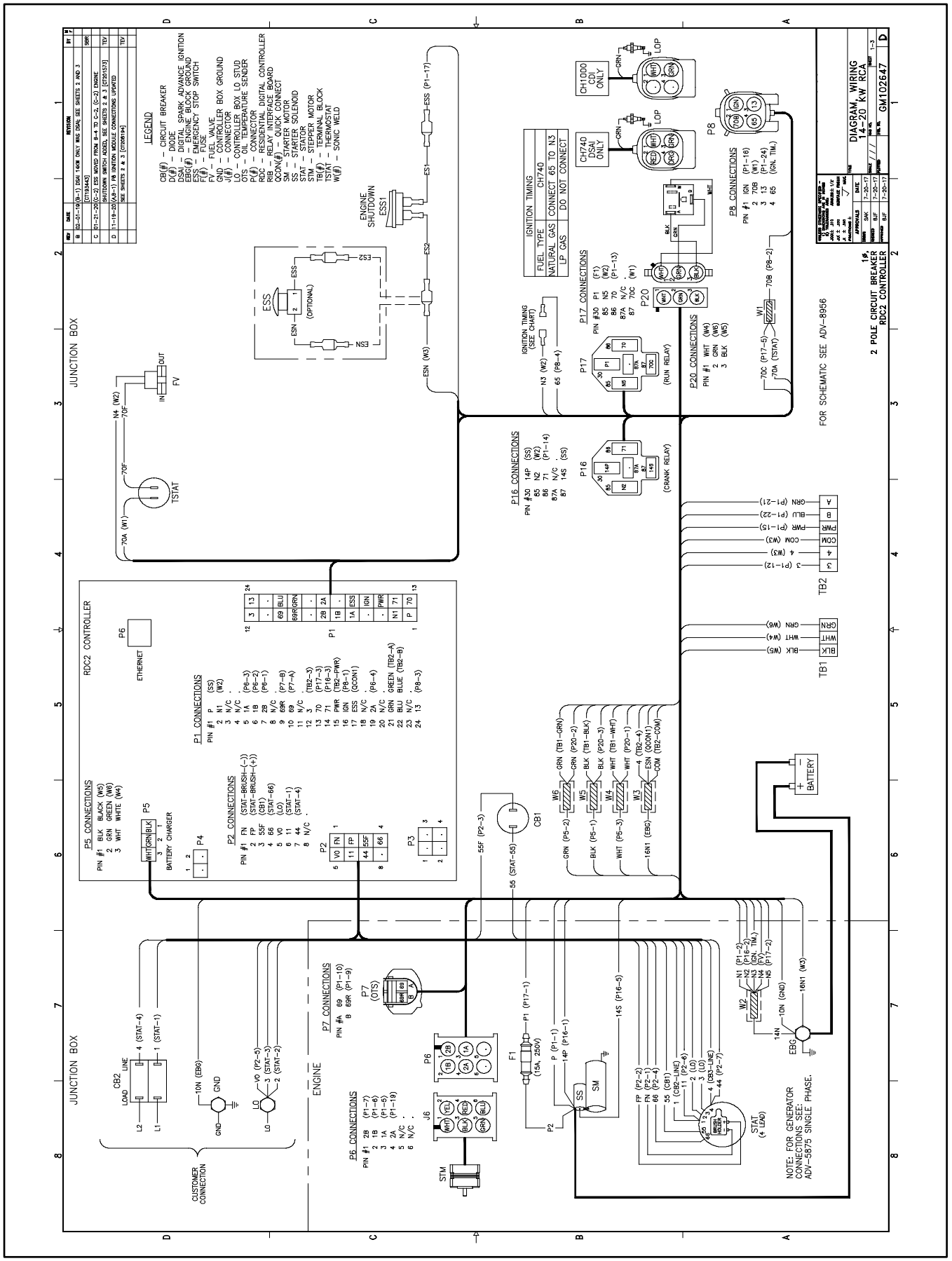

Figure 152 Wiring Diagram GM102647 Sheet 1, Single Phase, 2-Pole Circuit Breaker

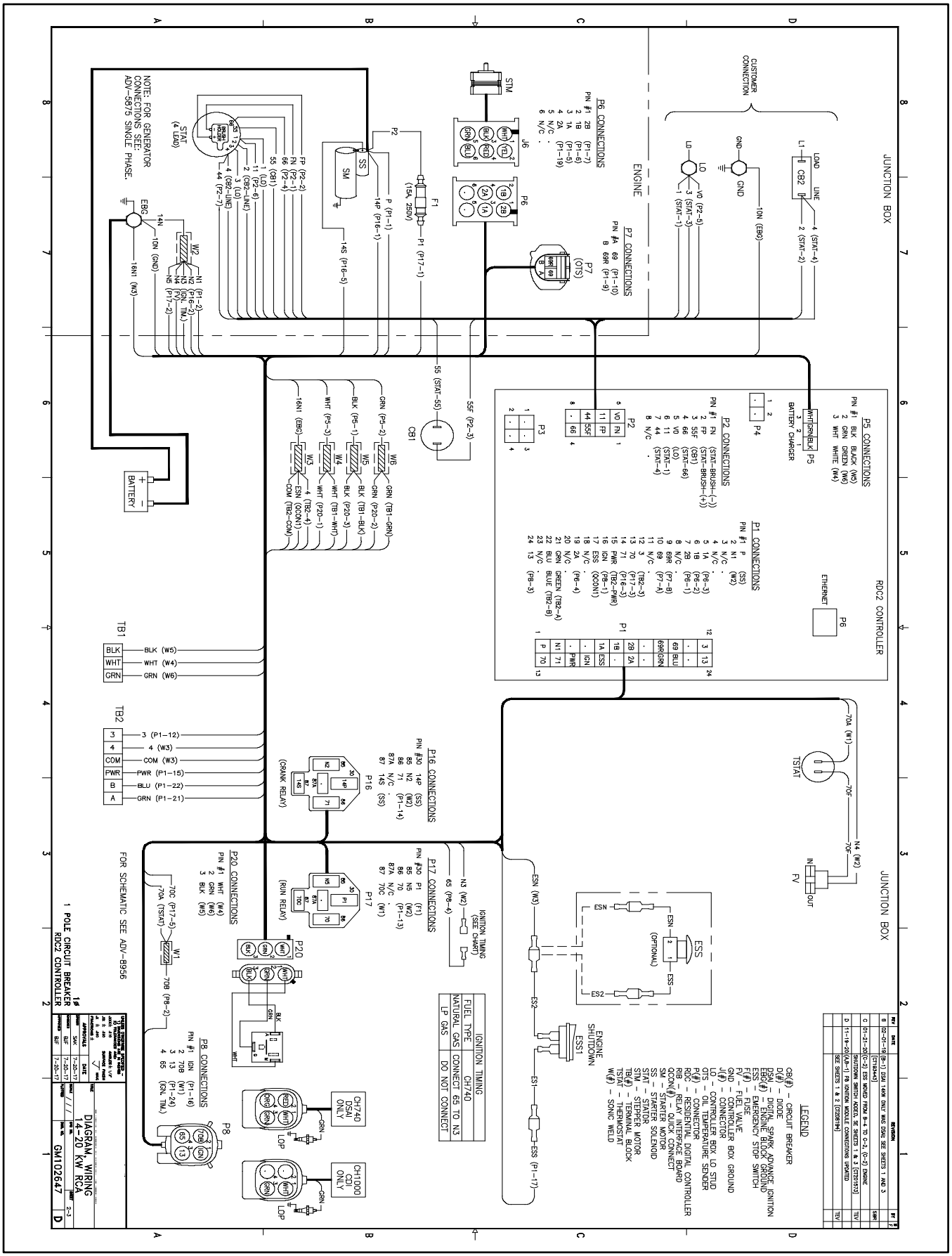

Figure 153 Wiring Diagram GM102647 Sheet 2, Single Phase, 1-Pole Circuit Breaker

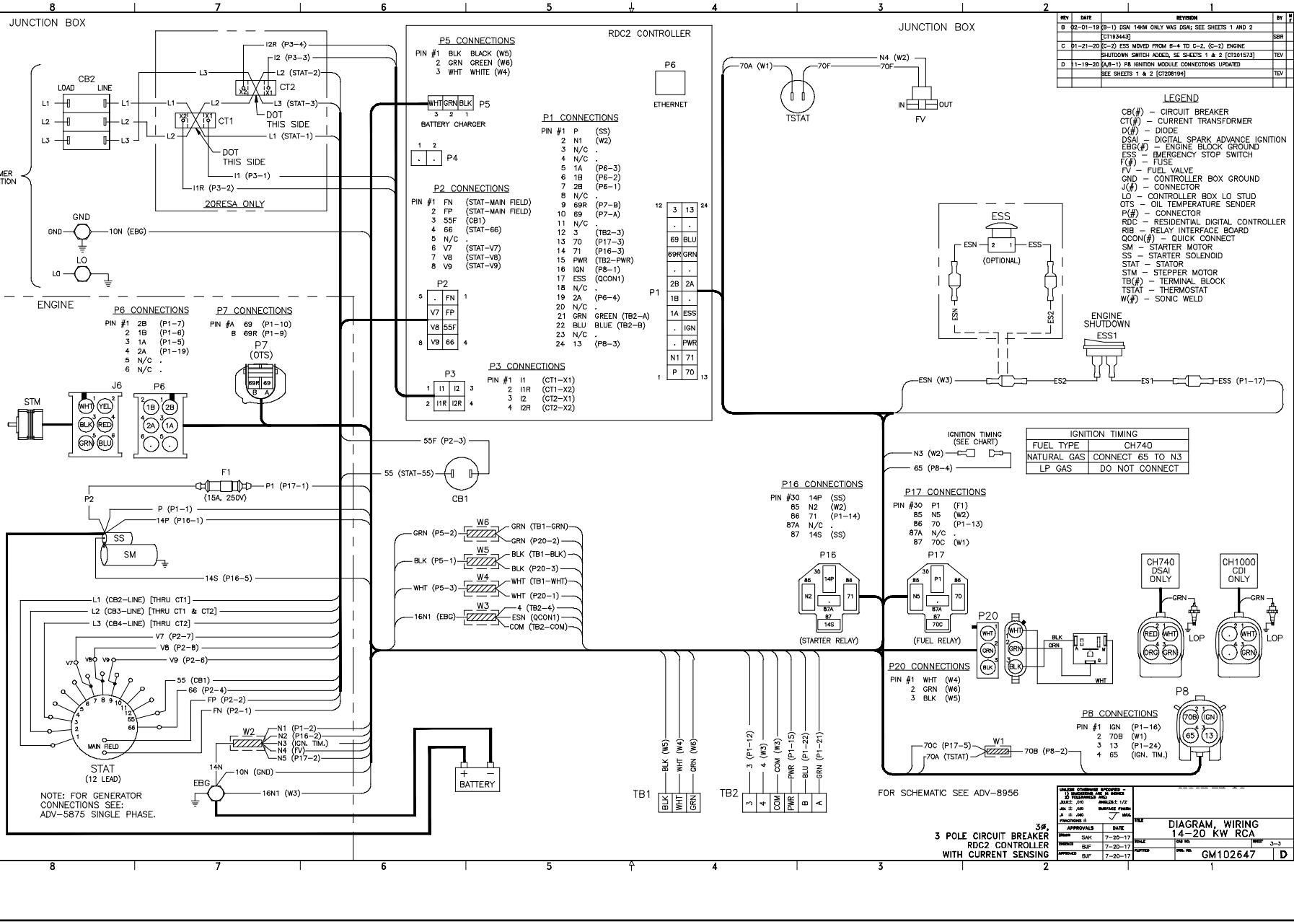
JUNCTION BOX
CB2
LOAD
LINE
CT2
CT1
DOT
THIS SIDE
I2R (P3-4)
I2 (P3-3)
L2 (STAT-2)
L3 (STAT-3)
L1 (STAT-1)
I1 (P3-1)
I1R (P3-2)
20RESA ONLY
CUSTOMER CONNECTION
GND
10N (EBG)
LO
ENGINE
P6 CONNECTIONS
P7 CONNECTIONS
P7 (OTS)
STM
J6
P6
F1
(15A, 250V)
P1 (P17-1)
P (P1-1)
14P (P16-1)
SS
SM
14S (P16-5)
55F (P2-3)
55 (STAT-55)
CB1
L1 (CB2-LINE) [THRU CT1]
L2 (CB3-LINE) [THRU CT1 & CT2]
L3 (CB4-LINE) [THRU CT2]
V7 (P2-7)
V8 (P2-8)
V9 (P2-6)
55 (CB1)
66 (P2-4)
FP (P2-2)
FN (P2-1)
MAIN FIELD
STAT
(12 LEAD)
W2
N1 (P1-2)
N2 (P16-2)
N3 (IGN. TIM.)
N4 (FV)
N5 (P17-2)
14N
10N (GND)
EBG
16N1 (W3)
NOTE: FOR GENERATOR CONNECTIONS SEE: ADV-5875 SINGLE PHASE.
RDC2 CONTROLLER
P5 CONNECTIONS
BATTERY CHARGER
P4
P2 CONNECTIONS
P3 CONNECTIONS
P1 CONNECTIONS
ETHERNET
W6
W5
W4
W3
GRN (P5-2)
BLK (P5-1)
WHT (P5-3)
16N1 (EBG)
GRN (TB1-GRN)
GRN (P20-2)
BLK (TB1-BLK)
BLK (P20-3)
WHT (TB1-WHT)
WHT (P20-1)
4 (TB2-4)
ESN (QCON1)
COM (TB2-COM)
TB1
TB2
BATTERY
JUNCTION BOX
70A (W1)
70F
N4 (W2)
TSTAT
FV
IN
OUT
ESS
ESN
ESS
(OPTIONAL)
ESN1
ESS2
ENGINE SHUTDOWN
ESS1
ESN (W3)
ES2
ES1
ESS (P1-17)
IGNITION TIMING (SEE CHART)
N3 (W2)
65 (P8-4)
P16 CONNECTIONS
P17 CONNECTIONS
P16
P17
(STARTER RELAY)
(FUEL RELAY)
P20
P20 CONNECTIONS
CH740 DSAI ONLY
CH1000 CDI ONLY
LOP
P8
P8 CONNECTIONS
70C (P17-5)
70A (TSTAT)
W1
70B (P8-2)
FOR SCHEMATIC SEE ADV-8956
3Ø,
3 POLE CIRCUIT BREAKER
RDC2 CONTROLLER
WITH CURRENT SENSING
LEGEND
CB(#) – CIRCUIT BREAKER
CT(#) – CURRENT TRANSFORMER
D(#) – DIODE
DSAI – DIGITAL SPARK ADVANCE IGNITION
EBG(#) – ENGINE BLOCK GROUND
ESS – EMERGENCY STOP SWITCH
F(#) – FUSE
FV – FUEL VALVE
GND – CONTROLLER BOX GROUND
J(#) – CONNECTOR
LO – CONTROLLER BOX LO STUD
OTS – OIL TEMPERATURE SENDER
P(#) – CONNECTOR
RDC – RESIDENTIAL DIGITAL CONTROLLER
RIB – RELAY INTERFACE BOARD
QCON(#) – QUICK CONNECT
SM – STARTER MOTOR
SS – STARTER SOLENOID
STAT – STATOR
STM – STEPPER MOTOR
TB(#) – TERMINAL BLOCK
TSTAT – THERMOSTAT
W(#) – SONIC WELD
IGNITION TIMING
FUEL TYPE | CH740
NATURAL GAS | CONNECT 65 TO N3
LP GAS | DO NOT CONNECT
REV | DATE | REVISION | BY
B | 02-01-19 | (9-1) DSAI 14KW ONLY WAS DSAI; SEE SHEETS 1 AND 2 [CT193443] | SBR
C | 01-21-20 | (C-2) ESS MOVED FROM B-4 TO C-2, (C-2) ENGINE SHUTDOWN SWITCH ADDED, SE SHEETS 1 & 2 [CT201573] | TEV
D | 11-19-20 | (A,B-1) P8 IGNITION MODULE CONNECTIONS UPDATED SEE SHEETS 1 & 2 [CT208194] | TEV
APPROVALS | DATE
DRAWN SAK 7-20-17
CHECKED BJF 7-20-17
APPROVED BJF 7-20-17
TITLE DIAGRAM, WIRING 14-20 KW RCA
SCALE
DWG NO. GM102647
REV D
SHEET 3-3

Figure 154 Wiring Diagram GM102647 Sheet 3, Three Phase, 3-Pole Circuit Breaker

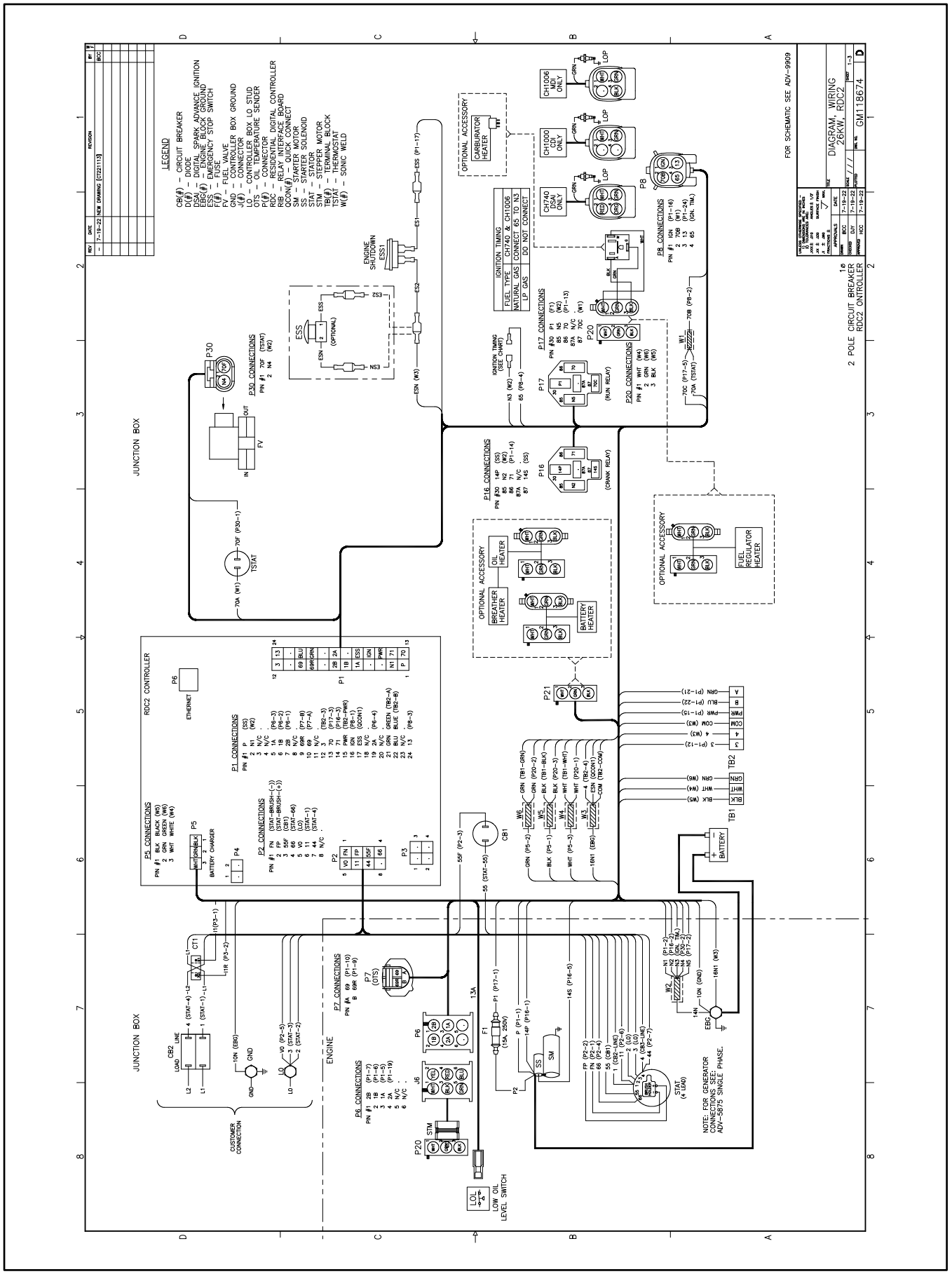

Figure 155 Wiring Diagram GM118674 Sheet 1, Single Phase, 2-Pole Circuit Breaker

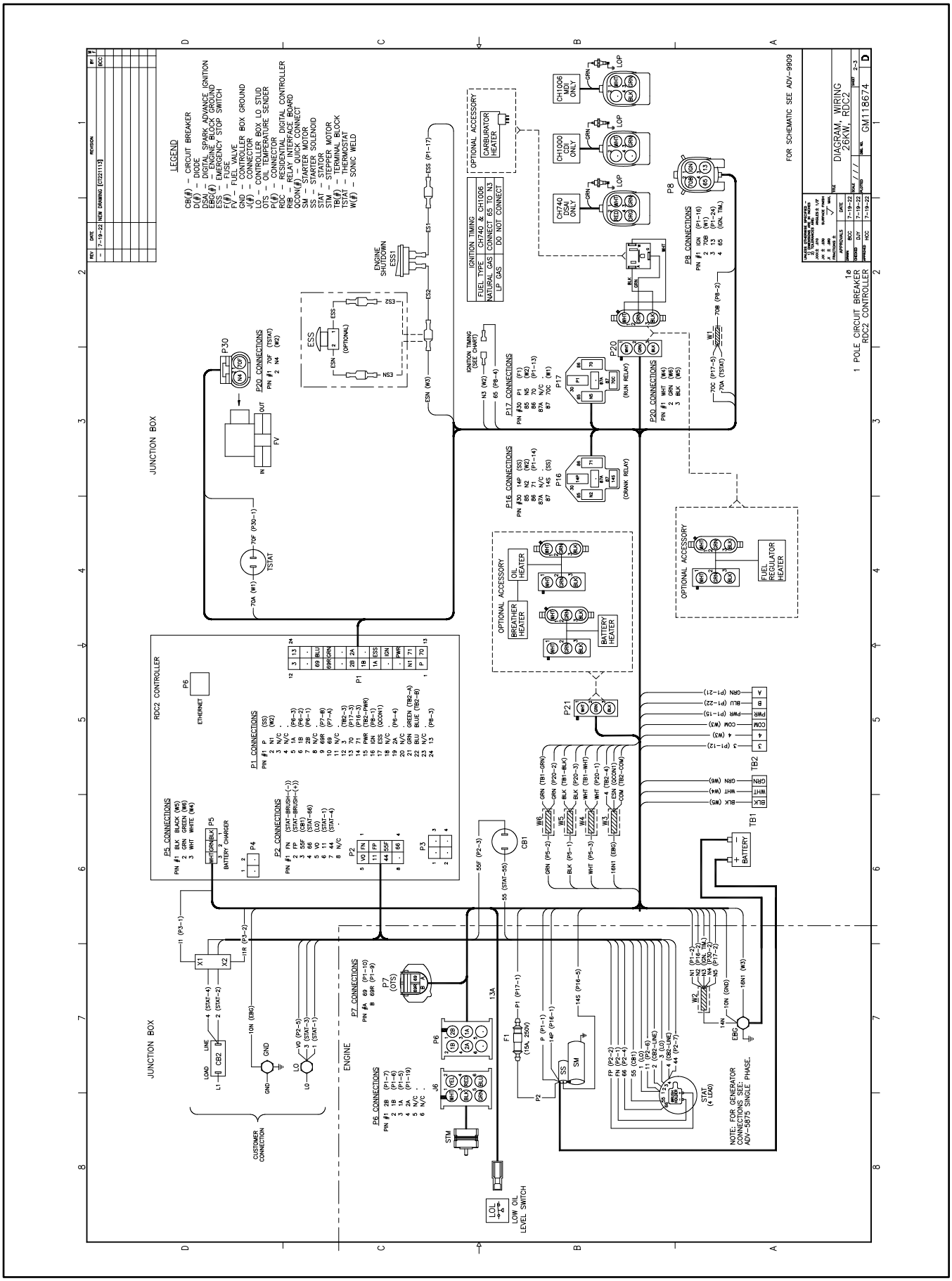

Figure 156 Wiring Diagram GM118674 Sheet 2, Single Phase, 1-Pole Circuit Breaker

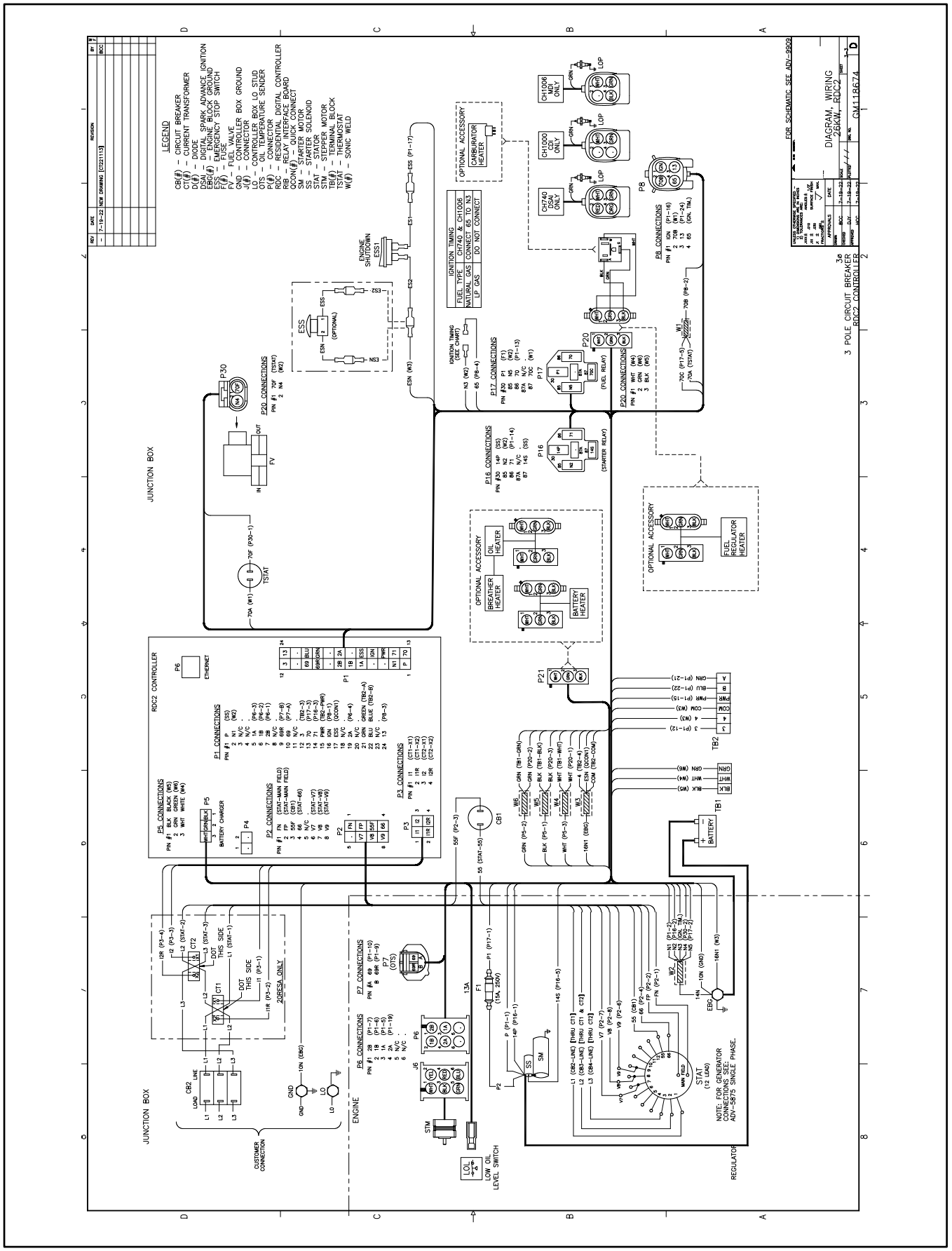

Figure 157 Wiring Diagram GM118674 Sheet 3, Three Phase, 3-Pole Circuit Breaker

Notes

A, amp	ampere	blk. htr.	block heater	DAC	digital to analog converter
ABDC	after bottom dead center	BMEP	brake mean effective pressure	dB	decibel
AC	alternating current	bps	bits per second	dB(A)	decibel (A weighted)
A/D	analog to digital	br.	Brass	DC	direct current
ADC	advanced digital control; analog to digital converter	BTDC	before top dead center	DCR	direct current resistance
adj.	adjust, adjustment	Btu	British thermal unit	DEF	diesel exhaust fluid
ADV	advertising dimensional drawing	Btu/min.	British thermal units per minute	deg., °	degree
AGM	absorbent glass mat	C	Celsius, centigrade	dept.	department
Ah	amp-hour	cal.	Calorie	dia.	Diameter
AHWT	anticipatory high water temperature	CAN	controller area network	DI/EO	dual inlet/end outlet
AISI	American Iron and Steel Institute	CARB	California Air Resources Board	DIN	Deutsches Institut fur Normung e. V. (also Deutsche Industrie Normenausschuss)
ALOP	anticipatory low oil pressure	CAT5	Category 5 (network cable)	DIP	dual inline package
alt.	alternator	CB	circuit breaker	DPDT	double-pole, double-throw
Al	aluminum	CC	crank cycle	DPST	double-pole, single-throw
ANSI	American National Standards Institute (formerly American Standards Association, ASA)	cc	cubic centimeter	DS	disconnect switch
AO	anticipatory only	CCA	cold cranking amps	DVR	digital voltage regulator
APDC	Air Pollution Control District	ccw.	Counterclockwise	E2PROM, EEPROM	electrically-erasable programmable read-only memory
API	American Petroleum Institute	CEC	Canadian Electrical Code	E, emer.	emergency (power source)
approx.	approximate, approximately	cert.	certificate, certification, certified	EATS	Exhaust Aftertreatment System
APU	Auxiliary Power Unit	cfh	cubic feet per hour	ECM	electronic control module, engine control module
AQMD	Air Quality Management District	cfm	cubic feet per minute	EDI	electronic data interchange
AR	as required, as requested	CG	center of gravity	EFR	emergency frequency relay
AS	as supplied, as stated, as suggested	CID	cubic inch displacement	e.g.	for example (exempli gratia)
ASE	American Society of Engineers	CL	centerline	EG	electronic governor
ASME	American Society of Mechanical Engineers	cm	centimeter	EGSA	Electrical Generating Systems Association
assy.	Assembly	CMOS	complementary metal oxide substrate (semiconductor)	EIA	Electronic Industries Association
ASTM	American Society for Testing Materials	com	communications (port)	EI/EO	end inlet/end outlet
ATDC	after top dead center	coml	commercial	EMI	electromagnetic interference
ATS	automatic transfer switch	Coml/Rec	Commercial/Recreational	emiss.	Emission
auto.	Automatic	conn.	Connection	eng.	Engine
aux.	auxiliary	cont.	continued	EPA	Environmental Protection Agency
avg.	average	CPVC	chlorinated polyvinyl chloride	EPS	emergency power system
AVR	automatic voltage regulator	crit.	Critical	ER	emergency relay
AWG	American Wire Gauge	CRM	Common Rail Manifold	ES	engineering special, engineered special
AWM	appliance wiring material	CSA	Canadian Standards Association		
bat.	Battery	CT	current transformer	ESD	electrostatic discharge
BBDC	before bottom dead center	Cu	copper	est.	estimated
BC	battery charger, battery charging	cUL	Canadian Underwriter’s Laboratories	E-Stop	emergency stop
BCA	battery charging alternator	cu. in.	cubic inch	etc.	et cetera (and so forth)
BCI	Battery Council International	cw.	Clockwise	exh.	exhaust
BDC	before dead center	CWC	city water-cooled	ext.	external
BHP	brake horsepower	cyl.	Cylinder	F	Fahrenheit, female
blk.	black (paint color), block (engine)	D/A	digital to analog	FDS	Fluid Dosing System

FHM	flat head machine (screw)	in.	inch	Lpm	liters per minute
fl. oz.	fluid ounce	in. H_2O	inches of water	LOP	low oil pressure
flex.	flexible	in. Hg	inches of mercury	LP	liquefied petroleum
freq.	frequency	in. Lb.	inch pounds	LPG	liquefied petroleum gas
FS	full scale	Inc.	incorporated	LS	left side
ft.	foot, feet	ind.	Industrial	L_{wa}	sound power level, A weighted
ft. lb.	foot pounds (torque)	int.	internal	LWL	low water level
ft./min.	feet per minute	int./ext.	internal/external	LWT	low water temperature
ftp	file transfer protocol	I/O	input/output	m	meter, milli (1/1000)
g	gram	IP	internet protocol	M	mega (10^6 when used with SI units), male
ga.	gauge (meters, wire size)	ISO	International Organization for Standardization	m^3	cubic meter
gal.	gallon	J	joule	m^3/hr.	cubic meters per hour
gen.	generator	JIS	Japanese Industry Standard	m^3/min.	cubic meters per minute
genset	generator set	k	kilo (1000)	mA	milliampere
GFI	ground fault interrupter	K	kelvin	man.	manual
GND, ⏚	ground	kA	kiloampere	max.	maximum
gov.	governor	KB	kilobyte (2^{10} bytes)	MB	megabyte (2^{20} bytes)
gph	gallons per hour	KBus	Kohler communication protocol	MCCB	molded-case circuit breaker
gpm	gallons per minute	kg	kilogram	MCM	one thousand circular mils
gr.	grade, gross	kg/cm^2	kilograms per square centimeter	meggar	megohmmeter
GRD	equipment ground	kgm	kilogram-meter	MHz	megahertz
gr. wt.	gross weight	kg/m^3	kilograms per cubic meter	mi.	mile
H x W x D	height by width by depth	kHz	kilohertz	mil	one one-thousandth of an inch
HC	hex cap	kJ	kilojoule	min.	minimum, minute
HCHT	high cylinder head temperature	km	kilometer	misc.	miscellaneous
HD	heavy duty	kOhm, kΩ	kilo-ohm	MJ	megajoule
HET	high exhaust temp., high engine temp.	kPa	kilopascal	mJ	millijoule
hex	hexagon	kph	kilometers per hour	mm	millimeter
Hg	mercury (element)	kV	kilovolt	mOhm, mΩ	milliohm
HH	hex head	kVA	kilovolt ampere	MOhm, MΩ	megohm
HHC	hex head cap	kVAR	kilovolt ampere reactive	MOV	metal oxide varistor
HP	horsepower	kW	kilowatt	MPa	megapascal
hr.	hour	kWh	kilowatt-hour	mpg	miles per gallon
HS	heat shrink	kWm	kilowatt mechanical	mph	miles per hour
hsg.	Housing	kWth	kilowatt-thermal	MS	military standard
HVAC	heating, ventilation, and air conditioning	L	liter	ms	millisecond
HWT	high water temperature	LAN	local area network	m/sec.	meters per second
Hz	hertz (cycles per second)	L x W x H	length by width by height	mtg.	mounting
IBC	International Building Code	lb.	pound, pounds	MTU	Motoren-und Turbinen-Union
IC	integrated circuit	lbm/ft^3	pounds mass per cubic feet	MW	megawatt
ID	inside diameter, identification	LCB	line circuit breaker	mW	milliwatt
IEC	International Electrotechnical Commission	LCD	liquid crystal display	µF	microfarad
IEEE	Institute of Electrical and Electronics Engineers	LED	light emitting diode	µF	microfarad
IMS	improved motor starting	Lph	liters per hour		

N, norm.	normal (power source)	PMG	permanent magnet generator	SCR	silicon controlled rectifier (electrical), selective catalytic reduction (exhaust emissions)
NA	not available, not applicable	pot	potentiometer, potential	s, sec.	second
nat. gas	natural gas	ppm	parts per million	SI	*Systeme international d'unites*, International System of Units
NBS	National Bureau of Standards	PROM	programmable read-only memory	SI/EO	side in/end out
NC	normally closed	psi	pounds per square inch	sil.	Silencer
NEC	National Electrical Code	psig	pounds per square inch gauge	SMTP	simple mail transfer protocol
NEMA	National Electrical Manufacturers Association	pt.	pint	SN	serial number
NiCd	nickel cadmium	PTC	positive temperature coefficient	SNMP	simple network management protocol
NFPA	National Fire Protection Association	PTO	power takeoff	SPDT	single-pole, double-throw
Nm	newton meter	PVC	polyvinyl chloride	SPST	single-pole, single-throw
NO	normally open	PVC	polyvinyl chloride	spec	specification
no., nos.	number, numbers	PWM	pulse width modulated, pulse width modulation	specs	specification(s)
NPS	National Pipe, Straight	qt.	quart, quarts	sq.	square
NPSC	National Pipe, Straight-coupling	qty.	quantity	sq. cm	square centimeter
NPT	National Standard taper pipe thread per general use	R	replacement (emergency) power source	sq. in.	square inch
NPTF	National Pipe, Taper-Fine	rad.	radiator, radius	SMS	short message service
NR	not required, normal relay	RAM	random access memory	SS	stainless steel
Ns	nanosecond	RDO	relay driver output	std.	standard
OC	overcrank	ref.	reference	stl.	Steel
OD	outside diameter	rem.	Remote	tach.	Tachometer
OEM	original equipment manufacturer	Res/Coml	Residential/Commercial	TB	terminal block
OF	overfrequency	RFI	radio frequency interference	TCP	transmission control protocol
opt.	option, optional	RH	round head	TD	time delay
OS	oversize, overspeed	RHM	round head machine (screw)	TDC	top dead center
OSHA	Occupational Safety and Health Administration	rly.	Relay	TDEC	time delay engine cooldown
OSHPD	Office of Statewide Health Planning and Development (California)	rms	root mean square	TDEN	time delay emergency to normal
OV	overvoltage	rnd.	Round	TDES	time delay engine start
oz.	ounce	RO	read only	TDNE	time delay normal to emergency
p., pp.	page, pages	ROM	read only memory	TDOE	time delay off to emergency
PC	personal computer	rot.	rotate, rotating	TDON	time delay off to normal
PCB	printed circuit board	rpm	revolutions per minute	temp.	temperature
pF	picofarad	RS	right side	term.	Terminal
PF	power factor	RTDs	resistance temperature detectors	THD	total harmonic distortion
ph., ø	phase	RTU	remote terminal unit	TIF	telephone influence factor
PHC	Phillips® head Crimptiter (screw)	RTV	room temperature vulcanization	tol.	Tolerance
PHH	Phillips® hex head (screw)	RW	read/write	turbo.	Turbocharger
PHM	pan head machine (screw)	SAE	Society of Automotive Engineers	typ.	typical (same in multiple locations)
PLC	programmable logic control	scfm	standard cubic feet per minute	UF	underfrequency

UHF	ultrahigh frequency
UIF	user interface
UL	Underwriter’s Laboratories, Inc.
UNC	unified coarse thread (was NC)
UNF	unified fine thread (was NF)
univ.	universal
URL	uniform resource locator (web address)
US	undersize, underspeed
UV	ultraviolet, undervoltage
V	volt
VAC	volts alternating current
VAR	voltampere reactive
VDC	volts direct current
VFD	vacuum fluorescent display
VGA	video graphics adapter
VHF	very high frequency
W	watt
WCR	withstand and closing rating
w/	with
WO	write only
w/o	without
wt.	weight
xfmr	transformer

Appendix B. Common Hardware Application Guidelines

Use the information below and on the following pages to identify proper fastening techniques when no specific reference for reassembly is made.

Bolt/Screw Length: When bolt/screw length is not given, use Figure 158 as a guide. As a general rule, a minimum length of one thread beyond the nut and a maximum length of 1/2 the bolt/screw diameter beyond the nut is the preferred method.

Washers and Nuts: Use split lock washers as a bolt locking device where specified. Use SAE flat washers with whiz nuts, spiralock nuts, or standard nuts and preloading (torque) of the bolt in all other applications.

See the Torque Specifications in the appendix and other torque specifications in the service literature.

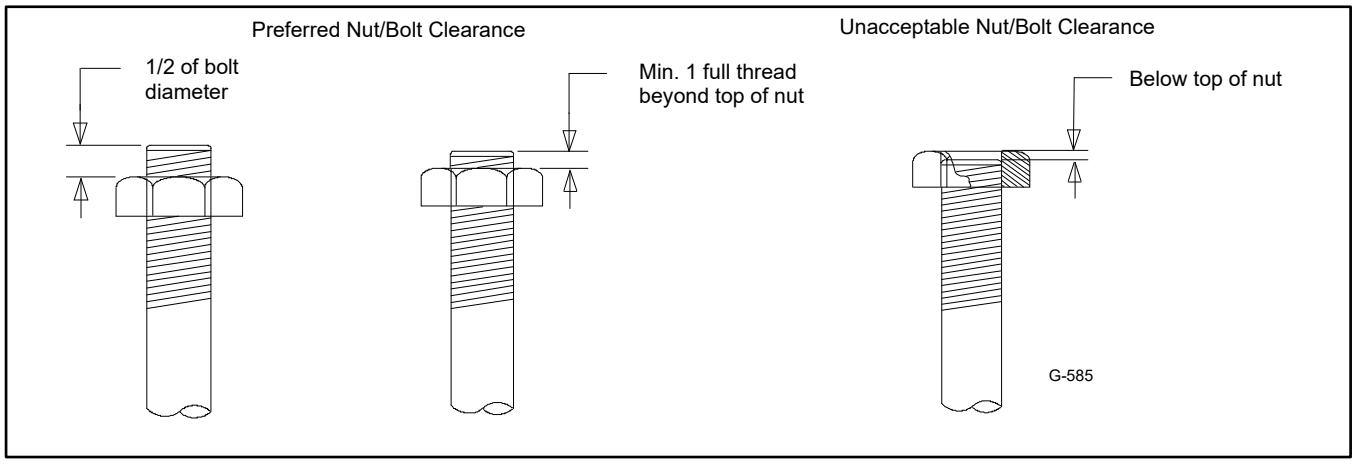

Figure 158 Acceptable Bolt Lengths

Steps for common hardware application:

1. Determine entry hole type: round or slotted.
2. Determine exit hole type: fixed female thread (weld nut), round, or slotted.
3. For round and slotted exit holes, determine if hardware is greater than 1/2 inch in diameter, or 1/2 inch in diameter or less. Hardware that is greater than 1/2 inch in diameter takes a standard nut and SAE washer. Hardware1/2 inch or less in diameter can take a properly torqued whiz nut or spiralock nut. See Figure 159.
4. Follow these SAE washer rules after determining exit hole type:
    a. Always use a washer between hardware and a slot.
    b. Always use a washer under a nut (see step 2 above for exception).
    c. Use a washer under a bolt when the female thread is fixed (weld nut).
5. Refer to Figure 159, which depicts the preceding hardware configuration possibilities.

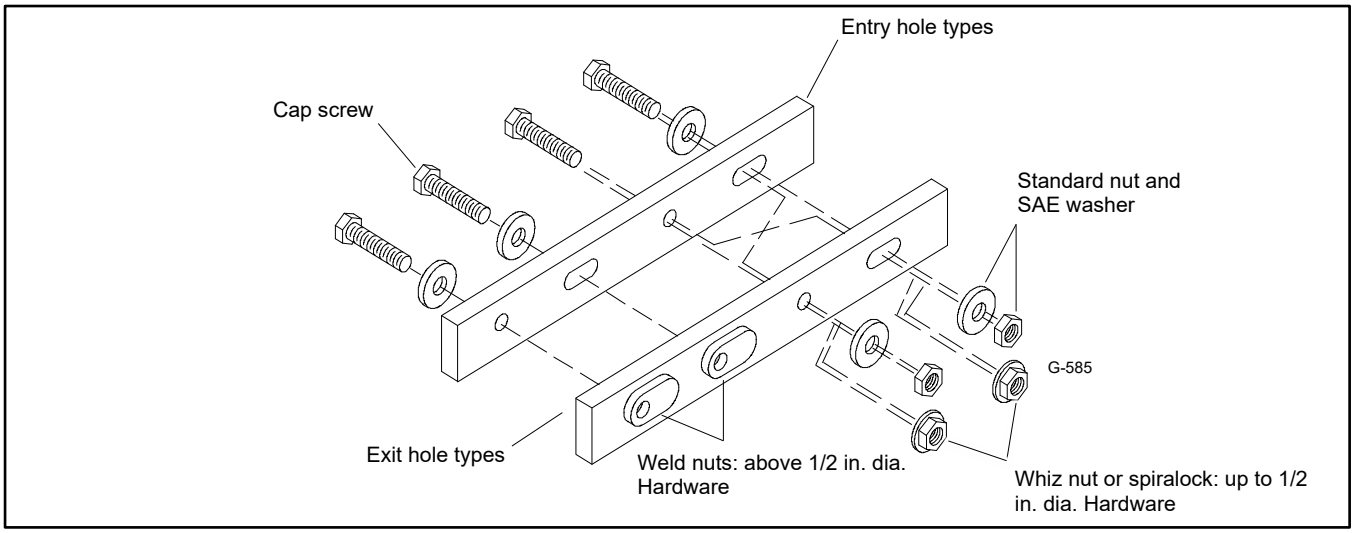

Figure 159 Acceptable Hardware Combinations

American Standard Fasteners Torque Specifications										
Size	Assembled into Cast Iron or Steel									Assembled into Aluminum
	Grade 2			Grade 5			Grade 8			
8-32	2.0	Nm	(18 in. lb.)	3.1	Nm	(27 in. lb.)	-			See Note 3
10-24	3.2	Nm	(28 in. lb.)	4.9	Nm	(43 in. lb.)	-			
10-32	3.6	Nm	(32 in. lb.)	5.5	Nm	(49 in. lb.)	-			
12-24	5.0	Nm	(44 in. lb.)	7.7	Nm	(68 in. lb.)	-			
1/4-20	7.6	Nm	(67 in. lb.)	11.6	Nm	(103 in. lb.)	16.5	Nm	(146 in. lb.)	
1/4-28	8.6	Nm	(76 in. lb.)	13.2	Nm	(117 in. lb.)	18.8	Nm	(166 in. lb.)	
5/16-18	15.5	Nm	(137 in. lb.)	24.0	Nm	(212 in. lb.)	33.9	Nm	(300 in. lb.)	
5/16-24	17.1	Nm	(151 in. lb.)	26.4	Nm	(234 in. lb.)	40	Nm	(28 ft. lb.)	
3/8-16	27	Nm	(243 in. lb.)	42	Nm	(31 ft. lb.)	60	Nm	(44 ft. lb.)	
3/8-24	31	Nm	(274 in. lb.)	47	Nm	(35 ft. lb.)	68	Nm	(50 ft. lb.)	
7/16-14	43	Nm	(32 ft. lb.)	68	Nm	(50 ft. lb.)	96	Nm	(71 ft. lb.)	
7/16-20	49	Nm	(36 ft. lb.)	76	Nm	(56 ft. lb.)	107	Nm	(79 ft. lb.)	
1/2-13	66	Nm	(49 ft. lb.)	103	Nm	(76 ft. lb.)	146	Nm	(108 ft. lb.)	
1/2-20	75	Nm	(55 ft. lb.)	117	Nm	(86 ft. lb.)	164	Nm	(121 ft. lb.)	
9/16-12	96	Nm	(71 ft. lb.)	149	Nm	(110 ft. lb.)	210	Nm	(155 ft. lb.)	
9/16-18	107	Nm	(79 ft. lb.)	165	Nm	(122 ft. lb.)	235	Nm	(173 ft. lb.)	
5/8-11	133	Nm	(98 ft. lb.)	206	Nm	(152 ft. lb.)	290	Nm	(214 ft. lb.)	
5/8-18	150	Nm	(111 ft. lb.)	232	Nm	(171 ft. lb.)	328	Nm	(242 ft. lb.)	
3/4-10	-			365	Nm	(269 ft. lb.)	515	Nm	(380 ft. lb.)	
3/4-16	-			405	Nm	(299 ft. lb.)	572	Nm	(422 ft. lb.)	
1-8	-			881	Nm	(650 ft. lb.)	1245	Nm	(918 ft. lb.)	
1-12	-			961	Nm	(709 ft. lb.)	1357	Nm	(1001 ft. lb.)	

Metric Fasteners Torque Specifications, Measured in Nm (ft. lb.)									
Size (mm)	Assembled into Cast Iron or Steel								Assembled into Aluminum
	Grade 5.8		Grade 8.8		Grade 10.9		Grade 12.9		
Mxxx-04xxx-xx	1.9	(1.4)	2.9	(2.1)	4.3	(3.2)	4.3	(3.2)	See Note 3
Mxxx-05xxx-xx	3.8	(2.8)	5.8	(4.3)	8.5	(6.3)	8.5	(6.3)	
Mxxx-06xxx-xx	6.5	(4.8)	10.4	(7.7)	14.7	(11)	17.6	(13)	
Mxxx-08xxx-xx	16	(12)	25	(17)	36	(26)	43	(31)	
Mxxx-08xxx-xxF	17	(13)	27	(20)	38	(28)	46	(34)	
Mxxx-10xxx-xx	31	(23)	50	(37)	70	(52)	85	(62)	
Mxxx-10xxx-xxF	33	(24)	53	(39)	74	(55)	89	(66)	
Mxxx-12xxx-xx	55	(40)	87	(64)	123	(91)	147	(109)	
Mxxx-12xxx-xxF	60	(44)	95	(70)	134	(99)	161	(119)	
Mxxx-14xxx-xx	87	(64)	135	(103)	196	(145)	236	(174)	
Mxxx-14xxx-xxF	94	(69)	151	(111)	212	(156)	254	(188)	
Mxxx-16xxx-xx	135	(100)	217	(160)	305	(225)	365	(270)	
Mxxx-16xxx-xxF	145	(107)	231	(171)	325	(240)	390	(288)	
Mxxx-18xxx-xx	187	(138)	299	(221)	421	(310)	505	(373)	
Mxxx-18xxx-xxF	210	(155)	336	(248)	473	(349)	567	(419)	
Mxxx-20xxx-xx	264	(195)	423	(312)	595	(439)	714	(526)	
Mxxx-20xxx-xxF	293	(216)	469	(346)	660	(487)	792	(584)	
Mxxx-22xxx-xx	360	(266)	576	(425)	811	(598)	973	(718)	
Mxxx-22xxx-xxF	396	(292)	633	(467)	890	(657)	1068	(788)	
Mxxx-24xxx-xx	457	(337)	731	(539)	1028	(758)	1233	(910)	
Mxxx-24xxx-xxF	498	(367)	797	(588)	1121	(827)	1345	(992)	
Mxxx-27xxx-xx	-		1072	(790)	1507	(1112)	1809	(1334)	
Mxxx-27xxx-xxF	-		1156	(853)	1626	(1199)	1952	(1439)	
Mxxx-30xxx-xx	-		1453	(1072)	2043	(1507)	2452	(1809)	

Notes:

1. The torque values above are general guidelines. Always use the torque values specified in the service manuals and/or assembly drawings when they differ from the above torque values.
2. The torque values above are based on new plated threads. Increase torque values by 15% if non-plated threads are used.
3. At minimum, hardware threaded into aluminum must have two diameters of thread engagement. Hardware threaded into steel and cast iron must have 1.25 diameters of thread.
4. Torque values are calculated as equivalent stress loading on American hardware with an approximate preload of 75% of proof strength and a friction coefficient of 0.2.

Appendix D. Common Hardware Identification

Screw/Bolts/Studs	
Head Styles	
Hex Head or Machine Head	
Hex Head or Machine Head with Washer	
Flat Head (FHM)	
Round Head (RHM)	
Pan Head	
Hex Socket Head Cap or Allen™ Head Cap	
Hex Socket Head or Allen™ Head Shoulder Bolt	
Sheet Metal Screw	
Stud	
Drive Styles	
Hex	
Hex and Slotted	
Phillips®	
Slotted	
Hex Socket	

Nuts	
Nut Styles	
Hex Head	
Lock or Elastic	
Square	
Cap or Acorn	
Wing	
Washers	
Washer Styles	
Plain	
Split Lock or Spring	
Spring or Wave	
External Tooth Lock	
Internal Tooth Lock	
Internal-External Tooth Lock	

Hardness Grades	
American Standard	
Grade 2	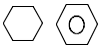
Grade 5	
Grade 8	
Grade 8/9 (Hex Socket Head)	
Metric	
Number stamped on hardware; 5.8 shown	
Hose Clamp Covers	
Black, EPDM rubber used on worm gear clamps	

Allen™ head screw is a trademark of Holo-Krome Co.
Phillips® screw is a registered trademark of Phillips Screw Company.

Sample Dimensions

American Standard (Screws, Bolts, Studs, and Nuts)

1/4-20 x 1
- 1 — Length In Inches (Screws and Bolts)
- 20 — Threads Per Inch
- 1/4 — Major Thread Diameter In Fractional Inches Or Screw Number Size

Metric (Screws, Bolts, Studs, and Nuts)

M8-1.25 x 20
- 20 — Length In Millimeters (Screws and Bolts)
- 1.25 — Distance Between Threads In Millimeters
- M8 — Major Thread Diameter In Millimeters

Plain Washers

9/32 x 5/8 x 1/16
- 1/16 — Thickness
- 5/8 — External Dimension
- 9/32 — Internal Dimension

Lock Washers

5/8
- 5/8 — Internal Dimension

Notes

Appendix E. Common Hardware List

The Common Hardware List lists part numbers and dimensions for common hardware items.

American Standard

Part No.	Dimensions
Hex Head Bolts (Grade 5)	
X-465-17	1/4-20 x .38
X-465-6	1/4-20 x .50
X-465-2	1/4-20 x .62
X-465-16	1/4-20 x .75
X-465-18	1/4-20 x .88
X-465-7	1/4-20 x 1.00
X-465-8	1/4-20 x 1.25
X-465-9	1/4-20 x 1.50
X-465-10	1/4-20 x 1.75
X-465-11	1/4-20 x 2.00
X-465-12	1/4-20 x 2.25
X-465-14	1/4-20 x 2.75
X-465-21	1/4-20 x 5.00
X-465-25	1/4-28 x .38
X-465-20	1/4-28 x 1.00
X-125-33	5/16-18 x .50
X-125-23	5/16-18 x .62
X-125-3	5/16-18 x .75
X-125-31	5/16-18 x .88
X-125-5	5/16-18 x 1.00
X-125-24	5/16-18 x 1.25
X-125-34	5/16-18 x 1.50
X-125-25	5/16-18 x 1.75
X-125-26	5/16-18 x 2.00
230578	5/16-18 x 2.25
X-125-29	5/16-18 x 2.50
X-125-27	5/16-18 x 2.75
X-125-28	5/16-18 x 3.00
X-125-22	5/16-18 x 4.50
X-125-32	5/16-18 x 5.00
X-125-35	5/16-18 x 5.50
X-125-36	5/16-18 x 6.00
X-125-40	5/16-18 x 6.50
X-125-43	5/16-24 x 1.75
X-125-44	5/16-24 x 2.50
X-125-30	5/16-24 x .75
X-125-39	5/16-24 x 2.00
X-125-38	5/16-24 x 2.75
X-6238-2	3/8-16 x .62
X-6238-10	3/8-16 x .75
X-6238-3	3/8-16 x .88
X-6238-11	3/8-16 x 1.00
X-6238-4	3/8-16 x 1.25
X-6238-5	3/8-16 x 1.50
X-6238-1	3/8-16 x 1.75
X-6238-6	3/8-16 x 2.00
X-6238-17	3/8-16 x 2.25
X-6238-7	3/8-16 x 2.50
X-6238-8	3/8-16 x 2.75
X-6238-9	3/8-16 x 3.00
X-6238-19	3/8-16 x 3.25
X-6238-12	3/8-16 x 3.50
X-6238-20	3/8-16 x 3.75
X-6238-13	3/8-16 x 4.50
X-6238-18	3/8-16 x 5.50
X-6238-25	3/8-16 x 6.50
X-6238-14	3/8-24 x .75
X-6238-16	3/8-24 x 1.25
X-6238-21	3/8-24 x 4.00
X-6238-22	3/8-24 x 4.50

Part No.	Dimensions
Hex Head Bolts, cont.	
X-6024-5	7/16-14 x .75
X-6024-2	7/16-14 x 1.00
X-6024-8	7/16-14 x 1.25
X-6024-3	7/16-14 x 1.50
X-6024-4	7/16-14 x 2.00
X-6024-11	7/16-14 x 2.75
X-6024-12	7/16-14 x 6.50
X-129-15	1/2-13 x .75
X-129-17	1/2-13 x 1.00
X-129-18	1/2-13 x 1.25
X-129-19	1/2-13 x 1.50
X-129-20	1/2-13 x 1.75
X-129-21	1/2-13 x 2.00
X-129-22	1/2-13 x 2.25
X-129-23	1/2-13 x 2.50
X-129-24	1/2-13 x 2.75
X-129-25	1/2-13 x 3.00
X-129-27	1/2-13 x 3.50
X-129-29	1/2-13 x 4.00
X-129-30	1/2-13 x 4.50
X-463-9	1/2-13 x 5.50
X-129-44	1/2-13 x 6.00
X-129-51	1/2-20 x .75
X-129-45	1/2-20 x 1.25
X-129-52	1/2-20 x 1.50
X-6021-3	5/8-11 x 1.00
X-6021-4	5/8-11 x 1.25
X-6021-2	5/8-11 x 1.50
X-6021-1	5/8-11 x 1.75
273049	5/8-11 x 2.00
X-6021-5	5/8-11 x 2.25
X-6021-6	5/8-11 x 2.50
X-6021-7	5/8-11 x 2.75
X-6021-12	5/8-11 x 3.75
X-6021-11	5/8-11 x 4.50
X-6021-10	5/8-11 x 6.00
X-6021-9	5/8-18 x 2.50
X-6239-1	3/4-10 x 1.00
X-6239-8	3/4-10 x 1.25
X-6239-2	3/4-10 x 1.50
X-6239-3	3/4-10 x 2.00
X-6239-4	3/4-10 x 2.50
X-6239-5	3/4-10 x 3.00
X-6239-6	3/4-10 x 3.50
X-792-1	1-8 x 2.25
X-792-5	1-8 x 3.00
X-792-8	1-8 x 5.00

Part No.	Dimensions	Type
Hex Nuts		
X-6009-1	1-8	Standard
X-6210-3	6-32	Whiz
X-6210-4	8-32	Whiz
X-6210-5	10-24	Whiz
X-6210-1	10-32	Whiz
X-6210-2	1/4-20	Spiralock
X-6210-6	1/4-28	Spiralock
X-6210-7	5/16-18	Spiralock
X-6210-8	5/16-24	Spiralock
X-6210-9	3/8-16	Spiralock
X-6210-10	3/8-24	Spiralock
X-6210-11	7/16-14	Spiralock
X-6210-12	1/2-13	Spiralock
X-6210-15	7/16-20	Spiralock
X-6210-14	1/2-20	Spiralock
X-85-3	5/8-11	Standard
X-88-12	3/4-10	Standard
X-89-2	1/2-20	Standard

Washers

Part No.	ID	OD	Thick.	Bolt/ Screw
X-25-46	.125	.250	.022	#4
X-25-9	.156	.375	.049	#6
X-25-48	.188	.438	.049	#8
X-25-36	.219	.500	.049	#10
X-25-40	.281	.625	.065	1/4
X-25-85	.344	.687	.065	5/16
X-25-37	.406	.812	.065	3/8
X-25-34	.469	.922	.065	7/16
X-25-26	.531	1.062	.095	1/2
X-25-15	.656	1.312	.095	5/8
X-25-29	.812	1.469	.134	3/4
X-25-127	1.062	2.000	.134	1

Hose Clamp Covers

Part No.	Clamp Size
GM102674-1	13 mm (1/2 in.)
GM102674-2	8 mm (5/16 in.)

Metric

Hex head bolts are hardness grade 8.8 unless noted.

Part No.	Dimensions
Hex Head Bolts (partial thread)	
M931-05055-60	M5-0.80 x 55
M931-06040-60	M6-1.00 x 40
M931-06055-60	M6-1.00 x 55
M931-06060-60	M6-1.00 x 60
M931-06070-60	M6-1.00 x 70
M931-06070-SS	M6-1.00 x 70
M931-06075-60	M6-1.00 x 75
M931-06090-60	M6-1.00 x 90
M931-06150-60	M6-1.00 x 150
M931-08035-60	M8-1.25 x 35
M931-08040-60	M8-1.25 x 40
M931-08040-82	M8-1.25 x 40*
M931-08045-60	M8-1.25 x 45
M931-08050-60	M8-1.25 x 50
M931-08055-60	M8-1.25 x 55
M931-08055-82	M8-1.25 x 55*
M931-08060-60	M8-1.25 x 60
M931-08070-60	M8-1.25 x 70
M931-08070-82	M8-1.25 x 70*
M931-08075-60	M8-1.25 x 75
M931-08080-60	M8-1.25 x 80
M931-08090-60	M8-1.25 x 90
M931-08095-60	M8-1.25 x 95
M931-08100-60	M8-1.25 x 100
M931-08120-60	M8-1.25 x 120
M931-08130-60	M8-1.25 x 130
M931-08140-60	M8-1.25 x 140
M931-10040-82	M10-1.25 x 40*
M931-10040-60	M10-1.50 x 40
M931-10045-60	M10-1.50 x 45
M931-10050-60	M10-1.50 x 50
M931-10055-60	M10-1.50 x 55
M931-10060-60	M10-1.50 x 60
M931-10065-60	M10-1.50 x 65
M931-10070-60	M10-1.50 x 70
M931-10080-60	M10-1.50 x 80
M931-10090-60	M10-1.50 x 90
M931-10090-82	M10-1.50 x 90*
M931-10100-60	M10-1.50 x 100
M931-10110-60	M10-1.50 x 110
M931-10120-60	M10-1.50 x 120
M931-10130-60	M10-1.50 x 130
M931-10140-60	M10-1.50 x 140
M931-10180-60	M10-1.50 x 180
M931-12045-60	M12-1.75 x 45
M960-12050-60	M12-1.25 x 50
M960-12050-82	M12-1.25 x 50*
M931-12050-60	M12-1.75 x 50
M931-12055-60	M12-1.75 x 55
M931-12060-60	M12-1.75 x 60
M931-12065-60	M12-1.75 x 65
M931-12075-60	M12-1.75 x 75
M931-12080-60	M12-1.75 x 80
M931-12090-60	M12-1.75 x 90
M931-12100-60	M12-1.75 x 100
M931-12110-60	M12-1.75 x 110
M960-16090-60	M16-1.50 x 90
M931-16090-60	M16-2.00 x 90
M931-16100-60	M16-2.00 x 100

Part No.	Dimensions
Hex Head Bolts (full thread)	
M933-04006-60	M4-0.70 x 6
M933-05035-60	M5-0.80 x 35
M933-05050-60	M5-0.80 x 50
M933-06010-60	M6-1.00 x 10
M933-06014-60	M6-1.00 x 14
M933-06016-60	M6-1.00 x 16
M933-06020-60	M6-1.00 x 20
M933-06025-60	M6-1.00 x 25
M933-06040-60	M6-1.00 x 40
M933-06050-60	M6-1.00 x 50
M933-08012-60	M8-1.25 x 12
M933-08016-60	M8-1.25 x 16
M933-08020-60	M8-1.25 x 20
M933-08025-60	M8-1.25 x 25
M933-08030-60	M8-1.25 x 30
M933-08030-82	M8-1.25 x 30*
M933-10012-60	M10-1.50 x 12
M961-10020-60	M10-1.25 x 20
M933-10020-60	M10-1.50 x 20
M933-10025-60	M10-1.50 x 25
M961-10030-60	M10-1.25 x 30
M933-10030-60	M10-1.50 x 30
M933-10030-82	M10-1.50 x 30*
M961-10035-60	M10-1.25 x 35
M933-10035-60	M10-1.50 x 35
M933-12016-60	M12-1.75 x 16
M933-12020-60	M12-1.75 x 20
M933-12025-60	M12-1.75 x 25
M933-12025-82	M12-1.75 x 25*
M961-12030-60	M12-1.25 x 30
M933-12030-60	M12-1.75 x 30
M933-12035-60	M12-1.75 x 35
M961-12040-82	M12-1.25 x 40*
M933-12040-60	M12-1.75 x 40
M933-12040-82	M12-1.75 x 40*
M961-14025-60	M14-1.50 x 25
M933-14025-60	M14-2.00 x 25
M961-16025-60	M16-1.50 x 25
M933-16025-60	M16-2.00 x 25
M961-16030-82	M16-1.50 x 30*
M933-16030-82	M16-2.00 x 30*
M933-16035-60	M16-2.00 x 35
M961-16040-60	M16-1.50 x 40
M933-16040-60	M16-2.00 x 40
M933-16050-60	M16-2.00 x 50
M933-16050-82	M16-2.00 x 50*
M933-16060-60	M16-2.00 x 60
M933-18035-60	M18-2.50 x 35
M933-18050-60	M18-2.50 x 50
M933-18060-60	M18-2.50 x 60
M933-20050-60	M20-2.50 x 50
M933-20055-60	M20-2.50 x 55

Part No.	Dimensions	Type
Hex Nuts		
M934-03-50	M3-0.50	Standard
M934-035-50	M3.5-0.50	Standard
M934-04-50	M4-0.70	Standard
M934-05-50	M5-0.80	Standard
M982-05-80	M5-0.80	Elastic Stop
M934-06-60	M6-1.00	Standard
M934-06-64	M6-1.00	Std. (green)
M6923-06-80	M6-1.00	Spiralock
M982-06-80	M6-1.00	Elastic Stop
M934-08-60	M8-1.25	Standard
M6923-08-80	M8-1.25	Spiralock
M982-08-80	M8-1.25	Elastic Stop
M934-10-60	M10-1.50	Standard
M934-10-60F	M10-1.25	Standard
M6923-10-80	M10-1.50	Spiralock
M6923-10-62	M10-1.50	Spiralock†
M982-10-80	M10-1.50	Elastic Stop
M934-12-60	M12-1.75	Standard
M934-12-60F	M12-1.25	Standard
M6923-12-80	M12-1.75	Spiralock
M982-12-80	M12-1.75	Elastic Stop
M982-14-80	M14-2.00	Elastic Stop
M6923-16-80	M16-2.00	Spiralock
M982-16-80	M16-2.00	Elastic Stop
M934-18-80	M18-2.5	Standard
M982-18-80	M18-2.50	Elastic Stop
M934-20-80	M20-2.50	Standard
M982-20-80	M20-2.50	Elastic Stop
M934-22-60	M22-2.50	Standard
M934-24-80	M24-3.00	Standard
M982-24-80	M24-3.00	Elastic Stop
M934-30-80	M30-3.50	Standard

Washers

Part No.	ID	OD	Thick.	Bolt/ Screw
M125A-03-80	3.2	7.0	0.5	M3
M125A-04-80	4.3	9.0	0.8	M4
M125A-05-80	5.3	10.0	1.0	M5
M125A-06-80	6.4	12.0	1.6	M6
M125A-08-80	8.4	16.0	1.6	M8
M125A-10-80	10.5	20.0	2.0	M10
M125A-12-80	13.0	24.0	2.5	M12
M125A-14-80	15.0	28.0	2.5	M14
M125A-16-80	17.0	30.0	3.0	M16
M125A-18-80	19.0	34.0	3.0	M18
M125A-20-80	21.0	37.0	3.0	M20
M125A-24-80	25.0	44.0	4.0	M24

* This metric hex bolt's hardness is grade 10.9.

Part No.	Dimensions
Hex Head Bolts (partial thread)	
M931-20065-60	M20-2.50 x 65
M931-20120-60	M20-2.50 x 120
M931-20160-60	M20-2.50 x 160
M931-22090-60	M22-2.50 x 90
M931-22120-60	M22-2.50 x 120
M931-22160-60	M22-2.50 x 160
M931-24090-60	M24-3.00 x 90
M931-24120-60	M24-3.00 x 120
M931-24160-60	M24-3.00 x 160

Part No.	Dimensions
Hex Head Bolts (full thread)	
Pan Head Machine Screws	
M7985A-03010-20	M3-0.50 x 10
M7985A-03012-20	M3-0.50 x 12
M7985A-04010-20	M4-0.70 x 10
M7985A-04020-20	M4-0.70 x 20
M7985A-04100-20	M4-0.70 x 100
M7985A-05010-20	M5-0.80 x 10
M7985A-05012-20	M5-0.80 x 12
M7985A-05016-20	M5-0.80 x 16
M7985A-05100-20	M5-0.80 x 100
M7985A-06100-20	M6-1.00 x 100
Flat Head Machine Screws	
M965A-04012-SS	M4-0.70 x 12
M965A-05012-SS	M5-0.80 x 12
M965A-05016-20	M5-0.80 x 16

Part No.	Dimensions	Type
Hex Nuts		

† This metric hex nut's hardness is grade 8.

KOHLER Generators

Discovery Energy, LLC
200 Twin Oaks Road, Kohler, WI 53044 USA
For the nearest sales and service outlet in the
US and Canada, phone 1-800-544-2444
kohlergenerators.com

rehlko

TP-7093 4/26d

Original Instructions (English)

© 2026 Discovery Energy, LLC - All rights reserved.