GREENLEE®
A Textron Company

WWW.GREENLEE.COM

MECHANICAL CATALOG







MORE THAN ELECTRICAL

MORE THAN ELECTRICAL

For over 150 years, Greenlee has had a reputation of being a premiere brand, manufacturing innovative products desired by professional trades people worldwide. Greenlee proudly designs, tests and manufactures superior tools, testers and software apps that will get your job done faster, safer and easier®. While we've always had a wide range of tools suitable for use in stainless steel, plumbing, HVAC and pipefitting applications, we are now dedicating resources and increasing efforts to expand our presence within the mechanical channel. The same reliability and innovation that made us a leader in the electrical, utility and communications trades will now be found in the plumbing, HVAC and pipefitting trades.

The trade is evolving and Greenlee is here to support you with a complete product offering.

GREENLEE

4455 Boeing Drive
Rockford, IL 61109-2988
USA

USA PHONE 800.435.0786
FAX 800.451.2632

CANADA PHONE 866.384.8813
FAX 800.524.2853

INT'L PHONE +1.815.397.7070
FAX +1.815.397.9247

GREENLEE DESIGN AND MANUFACTURING

Greenlee has been manufacturing high quality tools for the tradesman in the Chicago area since 1862. We continue to invest in innovative products designed with the highest quality and built to last.

Greenlee values its family atmosphere in every facility, and we are committed to the local community. We are headquartered in Rockford, Illinois and have manufacturing facilities in Illinois, Kentucky, Tennessee and California.



TABLE OF CONTENTS

Cutting 3–14

Hole Making 15–24

Bending 25-28

Expanding, Flaring, & Extracting 29-32

Pressing 33-36

Threading 37-44

Roll Grooving 45

Threading Accessories 46

Threading Dies 47-52

Soldering & Brazing 53-56

Plastic Welding 57

Pressure & Electrical Testing 59-68

Freezing 69-71

Pipe Repair Tool 72

Pipe & Drain Cleaning 73-78

Hand Tools 79-110

Storage and Material Handling 111-122

Index 123-136



GREENLEE®

GREENLEE®
A Textron Company

GREENLEE MECHANICAL SOLUTIONS
CUTTING





35 PRO TUBE CUTTER

Exact Telescopic Guide
Precise cutting

Guide Rollers with Recess
Cuts near to flares

Easy Turning Adjustment Knob
Quick adjust to the pipe size

Cutter Wheel Compartment

Retractable Pipe Deburrer
Self-contained deburrer

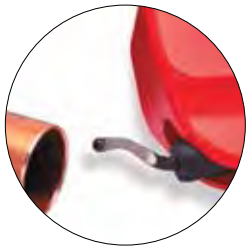



70027

CAT. NO.	UPC NO.	DESCRIPTION	O.D.
70027	70027	35 PRO - Copper & Aluminum	1/4" - 1-3/8"
21652	00754	Deburring Blades 1 Pk-Gratfix	—
21652B	16530	Deburring Blades 10 Pk-Gratfix	—
70017B	70017	Cutter Wheel 2 Pkg	—
70017D	00206	Cutter Wheel 5 Pkg	—



70030

AUTOMATIC RATCHET TELESCOPIC TUBE CUTTER

- **Ratcheting Telescopic Guide** - Quick adjust with automatic spring-driven release

CAT. NO.	UPC NO.	DESCRIPTION	O.D.
70030	70030	Automatic Tube Cutter Size 1	1/4" - 2-5/8"
21652B	16530	Deburring Blades 10 Pk-Gratfix	—
70017B	70017	Cutter Wheel 2 Pkg	—
70017D	00206	Cutter Wheel 5 Pkg	—

GREENLEE®
A Textron Company

ROTRAC 28 TUBE CUTTER



70010

- **Made in One Cast** - Stable and long-lasting

CAT. NO.	UPC NO.	DESCRIPTION	O.D.
70010	70010	Cutter (ROTRAC 28)	1/8" - 1-1/8"
70007B	10007	Cutter Wheel 2 Pkg	—
70007X	20007	Cutter Wheel 10 Pkg	—
99016	99016	Pin & Clip	—
90007	90007	Cutter Wheel SS	—
70014	70014	Cutter Wheel Plastic	—

35 PRO STAINLESS STEEL TUBE CUTTER



70055

- **Stainless Steel Pipe Cutter** - Hardened cutter for long service life

CAT. NO.	UPC NO.	DESCRIPTION	O.D.
70055	70055	35 PRO SS - Stainless Steel	1/4" - 1-3/8"
70056	70056	Cutter Wheel SS 1 Pkg	—
70056D	00704	Cutter Wheel SS 5 Pkg	—
21652	00754	Deburring Blades 1 Pk-Gratfix	—
21652B	16530	Deburring Blades 10 Pk-Gratfix	—

PIPE CUTTER



70040

- **Wide Rollers**

CAT. NO.	UPC NO.	DESCRIPTION	O.D.
70040	70040	Steel Pipe Cutter	1/8" - 1-1/4"
70046D	70046	Cutter Wheel 3 Pkg	—

STAINLESS STEEL PIPE CUTTER



70086

- **Wide Rollers**

CAT. NO.	UPC NO.	DESCRIPTION	O.D.
70086	70086	Stainless Steel Pipe Cutter	1/8" - 1-1/4"
70088	70088	Cutter Wheel 1 Pkg	—

MINI MAX TUBE CUTTER



70015

- **Ideal for hard to reach places**

CAT. NO.	UPC NO.	DESCRIPTION	O.D.
70015	70015	MINI MAX Tube Cutter	1/4" - 1-1/8"
70017B	70017	Cutter Wheel 2 Pkg	—
70017D	00206	Cutter Wheel 5 Pkg	—

ADDITIONAL CUTTERS

CAT NO.	UPC NO.	DESCRIPTION	O.D
70029	70029	24 Pro - Copper & Aluminum	1/4" – 1-5/8"
70109	70109	42 Pro MSR - Multi-Layer Piping	1/4" – 1-5/8"
70142	57014	Automatic Tube Cutter Size 2	2" – 5"
70143	57014	Automatic Tube Cutter Size 3	4" – 6-5/8"
70031	70031	Automatic Plastic Tube Cutter Size 1	1/8" – 2-5/8"
70032	70032	Automatic Plastic Tube Cutter Size 2	2" – 5"
70011	70011	Cutter (ROTRAC 42)	1/4" – 1-5/8"
70020	70020	Cutter (ROTRAC 28 Plus)	1/8" – 1-1/8"
70021	70021	Cutter (ROTRAC 42 Plus)	1/4" – 1-5/8"
70012	70012	ROTRAC 20PI For Plastic Pipe	1/8" – 3/4"
70013	70013	ROTRAC 32PI For Plastic Pipe	3/16" – 1-1/4"
70018	70018	ROTRAC 42 For Flexible Gas Pipe	1/4" – 1-5/8"
70070	70070	42 Pro SS - Stainless Steel	1/4" – 1-5/8"
70045	70045	Steel Pipe Cutter	1/8" – 2"

CAT NO.	UPC NO.	DESCRIPTION	O.D
70060	70060	Steel Pipe Cutter	2" – 4"
P70045C	70045	Plastic Coated Pipe Cutter	1/8" – 4"
70087	70087	Stainless Steel Pipe Cutter	1/4" – 2"
70401	57040	MINICUT I Pro	1/8" – 5/8"
70402	70402	MINICUT II Pro	1/4" – 7/8"
70105	70105	MINICUT 2000	1/4" – 7/8"
71019	57101	Tube Cutter 30	1/8" – 1-1/8"
70065	57006	Tube Cutter 50	1/2"– 2"
88807	88807	PIPESLICE 1	1/8"
88808	88808	PIPESLICE 2	5/8"
88802	88802	PIPESLICE 4	7/8"
70285	70285	Chain Tube Cutter	1" – 2"

REPLACEMENT PARTS

CAT NO.	UPC NO.	DESCRIPTION	MODELS
70007B	10007	Cutter Wheel 2 Pkg (ROTRAC Cutters)	70010, 70011, 70020, 70021, 70012, 70013, 70018
70007X	20007	Cutter Wheel 10 Pkg (ROTRAC Cutters)	70010, 70011, 70020, 70021, 70012, 70013, 70018
99016	99016	Pin & Clip (ROTRAC Cutters)	70010, 70011, 70020, 70021, 70012, 70013, 70018
90007	90007	Cutter Wheel SS (ROTRAC Cutters)	70010, 70011, 70020, 70021, 70012, 70013, 70018
70014	70014	Cutter Wheel Plastic (ROTRAC Cutters)	70010, 70011, 70020, 70021, 70012, 70013, 70018
70017B	70017	Cutter Wheel 2 Pkg	70401, 70402, 70105, 70015, 71019, 70065, 70030, 70027, 70029
70017D	00206	Cutter Wheel 5 Pkg	70401, 70402, 70105, 70015, 71019, 70065, 70030, 70027, 70029
70056D	00704	Cutter Wheel SS 5 Pkg	71019, 70065, 70055, 70070
70057D	70057	Automatic Cutter Wheel 2 Pkg	70142, 70143
21652B	16530	Deburring Blades 10 Pk-Gratfix	70030, 70142, 70143, 70027, 70029, 70109, 70055, 70070
70028D	70028	Automatic PL Cutter Wheel 3 Pkg (Size 1)	70031
55054D	00716	Automatic PL Cutter Wheel 3 Pkg (Size 2)	70032
88806	88806	Cutter Wheel (Pipeslice 1, 2)	88807, 88808
88803	88803	Cutter Wheel (Pipeslice 4)	88802
70188	70188	Cutter Wheel for 42 PRO MSR	70109
70056	70056	Cutter Wheel SS 1 Pkg (35/42 Pro SS)	70055, 70070
21652	00754	Deburring Blades 1 Pk-Gratfix	70027, 70029, 70109, 70055, 70070
70046D	70046	Cutter Wheel 3 Pkg (1-1/4” Steel Pipe Cutter)	70040
70051D	70051	Cutter Wheel 3 Pkg (2” Steel Pipe Cutter)	70045
70054	70054	Cutter Wheel - For Cast Iron 2"	70045
70061D	70061	Cutter Wheel 2 Pkg (4" Steel Pipe Cutter)	70060
70088	70088	Cutter Wheel 1 Pkg (1-1/4" SS Pipe Cutter)	70086
70089	70089	Cutter Wheel 1 Pkg (2" SS Pipe Cutter)	70087
70286	70286	Cutter Wheel - For Chain Tube Cutter	70285

GREENLEE®
A Textron Company


70075


11006X


11006R

INTERNAL/EXTERNAL DEBURRING TOOLS

- For copper, steel, and stainless steel, with polished cutting bit made of hardened special steel

CAT. NO.	UPC NO.	DESCRIPTION
70075	70075	Internal/External Deburrer for Copper & Stainless Steel (O.D. 3/8" – 2")
11006X	21006	Internal/External Deburrer for Copper & Stainless Steel (O.D. 1/8" – 1-3/8")
11006R	11006	Internal/External Deburrer for Copper & Plastic (O.D. 1/8" – 1-5/8")


21660



21655

DEBURRING TOOLS

- Fast deburring of edges, tubes, and sheets

CAT. NO.	UPC NO.	DESCRIPTION
21660	21660	UNIGRAT Pocket Deburring Tool
21655	07671	Deburring Tool (Gratfix)
21652	00754	Deburring Blades 1 Pk-Gratfix
21652B	16530	Deburring Blades 10 Pk-Gratfix

ROCUT PRO 42TC

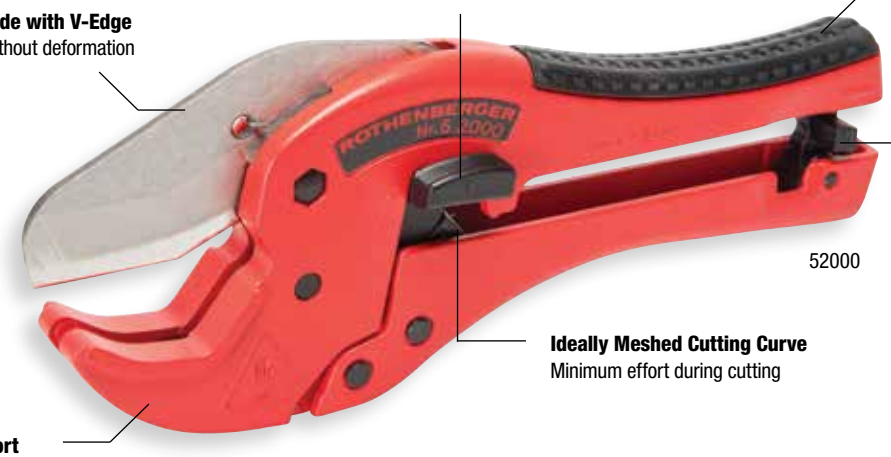

CAT. NO.	UPC NO.	DESCRIPTION	MAX SCH. 40 PVC	O.D.
52000	52000	ROCUT Professional 42TC	1-1/4"	1-5/8"
52042	52042	Replacement Blade	—	—


52030R

ROCUT 63TC

- **Teflon®* Blade** - Less friction between blade and pipe

CAT. NO.	UPC NO.	DESCRIPTION	MAX SCH. 40 PVC	O.D.
52030R	52030	ROCUT Professional 63TC	2"	2-1/2"
52031	52031	Replacement Blade	—	—

*Teflon is a registered trademark of the Chemours Company


52005

ROCUT 26TC

- **Stainless Steel Blade** - For fast and accurate cuts

CAT. NO.	UPC NO.	DESCRIPTION	O.D.
52005	52005	ROCUT 26TC	Cuts PE, PEX, PP & CPVC Plastic Pipe up to 1-1/4"


864

PVC CUTTER

- **Heat-Treated Blade** - Long cutting life
- **Rugged Frame** - Metal alloy frame for durability

CAT. NO.	UPC NO.	DESCRIPTION	MAX SCH. 40 PVC	O.D.
864	04253	PVC Cutter	1-1/4"	1-1/4"
00355	00355	Blade Kit	—	—

GREENLEE®
A Textron Company



865

PVC CUTTER

- **Long Handles** - High-leverage reduces effort
- **Rugged Frame** - Metal alloy frame for durability

CAT. NO.	UPC NO.	DESCRIPTION	MAX SCH. 40 PVC	O.D.
865	09865	PVC	2"	2"
07978	07978	Blade	—	—
07982	07982	Pressing Spring	—	—
07987	07987	Ratchet Spring	—	—



862

PLASTIC PIPE CUTTER

- **Reversible Blade** - Enable twice the blade life
- **Lockable Latch** - Lock for safety
- **Aluminum Body** - Alloy body for added strength and blade guide for square cuts
- Note: Cuts 1/8" – 1-3/8" flexible pipe

CAT. NO.	UPC NO.	DESCRIPTION	MAX SCH. 40 PVC
862	89806	Plastic Pipe Cutter	3/4"

ADDITIONAL CUTTERS

CAT. NO.	UPC NO.	DESCRIPTION	MAX SCH. 40 PVC	O.D.
52010R	2266	ROCUT PRO 50TC	1-1/2"	2"
52015	52015	ROCUT PRO 75TC	2-1/2"	3"
59060	59060	PLASTICUT 1/2"	—	1/2"
59070	59070	PLASTICUT 3/4"	—	3/4"
59080	59080	PLASTICUT 1"	—	1"
52040	52040	ROCUT 32TC	—	1-1/4"
52005	52005	ROCUT 26TC	—	1"

PVC CUTTER REPLACEMENT PARTS

CAT NO.	UPC NO.	DESCRIPTION	MODELS
00355	00355	Blade Kit	864
07978	07978	Blade	865
07982	07982	Pressing Spring	865
07987	07987	Ratchet Spring	865
52042	52042	Replacement Blade	52000
52011	02537	Replacement Blade	52010R
52031	52031	Replacement Blade	52030R
52016	02538	Replacement Blade	52015
59000	59000	Replacement Blade PLASTICUT 1/2" & 3/4"	59060 & 59070
59001	59001	Replacement Blade PLASTICUT 1"	59080
52041	52041	Replacement Blade	52040



52030R

ROCUT 110 & 160

- **Cutter Wheel Insert** - Special accessories for PE, PP, PEX, and sound-insulated pipes
- **Centered, and Safe Cutting Geometry Pipe Clamping, Including Non-Round Pipes** - Continuously adjustable pipe clamping pressure
- **Integrated Internal Deburrer** - Stored in the handle for easy access

CAT. NO.	UPC NO.	DESCRIPTION
R55035R	55035	ROCUT 110 Set
R55063R	55063	ROCUT 160 Set



52030R

ROCUT GC 4, 8, & 12

- **Fast opening design** - Easy to use
- **Heavy Duty Quadruple Ground Stainless Steel Blade** - Durable & long service life
- **Square Drive** - For use with wrench or other driving device
- **Fold Out Clamp** - For use in deep trenches
- **V-shaped Clamp** - Centers pipe for a clean & straight cut
- **No Electricity Needed** - For safe operation
- **Optimized Cutting Angle** - For easier cutting and fewer deformed pipes

CAT. NO.	UPC NO.	DESCRIPTION
R211512R	21151	ROCUT GC, 4"
R211522R	21152	ROCUT GC, 8"
R211532R	21153	ROCUT GC, 12"
R211501R	21150	Stainless Steel Cutter Blade, 4"
R211502R	05112	Stainless Steel Cutter Blade, 8"
R211503R	21143	Stainless Steel Cutter Blade, 12"

GREENLEE®
A Textron Company

Capacity: 1/4"-4" Pipe
5/8"-4 1/2" Tubing



00033 Model C
on optional stand
(00037)

COLLINS E-Z CUTTER™

- **Universal AC/DC Motor** - Provides a full 1/2 HP for all-day production needs
- **Gear-Driven Rollers** - Turn the work for true perpendicular cutting
- **Ball-Bearing Assembled Cutter Wheel** - Revolves freely for even wear
- **High-Speed Tool-Steel Cutter Wheels** - Provide thousands of cuts with no external burr – So clean that no further finishing is needed before applying fittings
- **Foot Switch** - Provides operator safety while freeing both hands for high-volume production demands

CAT. NO.	UPC NO.	DESCRIPTION
00032	10001	E-Z CUTTER™ Model A, 115V
00533	10018	E-Z CUTTER™ Model A, 230V
00033	10025	E-Z CUTTER™ Model C, 115V with Heavy-Duty Rollers & Two Stationary Supports
00534	10032	E-Z CUTTER™ Model C, 230V with Heavy-Duty Rollers & Two Stationary Supports
00034R	10049	Steel Pipe Cutter Wheel (Galvanized, Black & Stainless Steel)
00035R	10056	Copper Tube Cutter Wheel
00535	10063	Soil Pipe Cutter Wheel
00036R	10087	Stationary Support
00037	10094	E-Z CUTTER™ Stand
00069	10100	Roller Bearing Support
00071	10117	Pipe Support Fitting
00079	10124	Foot Switch, 115V
02350	10131	Foot Switch, 230V



ETS12L

GATOR® BATTERY-POWERED BOLT CUTTER

- Designed to cut one-time disposable locks, shipping container seals, and small diameter bolts
- State-of-the-art 18V lithium ion (Li-ion) battery provides 70% more cycles per charge and faster cycle times
- LED light provides the operator with the battery charge and tool maintenance status
- In line tool style is light weight and very easy to control
- One trigger controls all tool functions
- Cutting head rotates 350°
- Tool automatically retracts when the cutting cycle is complete

CAT. NO.	UPC NO.	DESCRIPTION
ETS12L11	52134	Battery Bolt & Lock Cutter with 120V Charger
ETS12L12	52135	Battery Bolt & Lock Cutter with 12V Charger
ETS12L22	52136	Battery Bolt & Lock Cutter with 220V Charger
ETS12L120	52137	Bolt & Lock Cutter with 120V AC Adapter
ETS12L230	52138	Bolt & Lock Cutter with 230V AC Adapter
ETS12LB	01139	ETS12 Bare Bolt & Lock Cutter
KK50LGL	25752	Carrying Case
52177	52177	18V 1.5Ah Li-Ion Battery
HB.9864	56288	Cutter Blade Kit
52178	52178	120V Charger
52179	52179	230V Charger
52180	52180	12V Charger

RECIPROCATING SAW BLADES

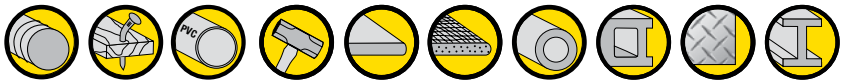

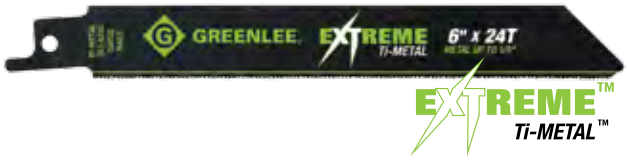

GREENLEE EXTREME™ Ti-Metal® Blades

- High performance Titanium (Ti) coating + Improved Bi-Metal blades = GREENLEE EXTREME™ Ti-Metal®
- The super-hard titanium coating helps dissipate heat and resists wear on the cutting teeth
- Extreme™ Ti-Metal® blades stay sharp, cut faster, and last longer… even in the most demanding applications



GREENLEE EXTREME™ Blades

- Heavy-duty blades for heavy metal applications
- Designed specifically for extreme metal cutting in structural steel I-Beam and angle iron
- Thicker, wider blades cut straighter and resist bending during high-load cuts



GREENLEE Bi-Metal Blades

- Greenlee blades feature improved bi-metal material with added cobalt for increased toughness, durability and blade life
- Precision cutting teeth are designed to stay sharp and cut fast, saving valuable time on the job
- Available in a variety of blade types for cutting wood, nail embedded wood, metal, and other demanding construction materials

BLADE TYPE	CAT. NO.	LENGTH X WIDTH X THICKNESS INCH / MM	MATERIAL	QTY/ PK	TEETH PER INCH	SPEED AND QUALITY OF CUT
EXTREME™ Ti-METAL®		NOTE: Minimum blade length = Material width + 3"				
	353-624G	6" x 3/4" x .035 / 152 x 19 x .9	**BEST** for **sheet** metal (1/8" and less)	5	24T	SLOWER, SMOOTHER
	353-818G	8" x 3/4" x .035 / 203 x 19 x .9	**BEST** for **thin** metal (1/16" - 3/16")	5	18T	
	353-618G	6" x 3/4" x .035 / 152 x 19 x .9	**BEST** for **thin** metal (1/16" - 3/16")	5	18T	
	353-614G	6" x 3/4" x .035 / 152 x 19 x .9	**BEST** for **medium** metal (3/32" - 3/8")	5	14T	
	353-610G	6" x 3/4" x .035 / 152 x 19 x .9	**BEST** for general purpose	5	10T	
	353-810G	8" x 3/4" x .050 / 203 x 19 x 1.3	**BEST** for general purpose	5	10T	
	353-656G	6" x 3/4" x .050 / 152 x 19 x 1.3	**BEST** for clean wood and wood with nails (plunge cutting)	5	6T	FASTER, ROUGHER
EXTREME™		NOTE: Minimum blade length = Material width + 3"				
	353-6118	6" x 1" x .042 / 152 x 25 x 1.1	**BEST** for structural steel (up to 1/4")	5	18T	SLOWER, SMOOTHER
	353-9118	9" x 1" x .042 / 229 x 25 x 1.1	**BEST** for structural steel (up to 1/4")	5	18T	
	353-6114	6" x 1" x .042 / 152 x 25 x 1.1	**BEST** for structural steel (up to 3/8")	5	14T	
	353-9114	9" x 1" x .042 / 229 x 25 x 1.1	**BEST** for structural steel (up to 3/8")	5	14T	FASTER, ROUGHER

GREENLEE®
A Textron Company

RECIPROCATING SAW BLADES

Metal | Wood With Nails | Plastic | Demolition | Drywall | Cement Board | Cast Iron | Block | Stainless Steel | Structural Steel

BLADE TYPE	CAT. NO.	LENGTH X WIDTH X THICKNESS INCH / MM	MATERIAL	QTY/ PK	TEETH PER INCH	SPEED AND QUALITY OF CUT
BI-METAL		**NOTE: Minimum blade length = Material width + 3”**				
	353-624	6 x 3/4 x .035 / 152 x 19 x .9	**BETTER** for **sheet** metal (1/8” and less)	5	24T	SLOWER, SMOOTHER
	353-818	8 x 3/4 x .035 / 203 x 19 x .9	**BETTER** for **thin** metal (1/16” - 3/16”)	5	18T	
	353-618	6 x 3/4 x .035 / 152 x 19 x .9	**BETTER** for **thin** metal (1/16” - 3/16”)	5	18T	
	353-814	8 x 3/4 x .050 / 203 x 19 x 1.3	**BETTER** for **medium** metal (3/32” - 3/8”)	5	14T	
	353-614	6 x 3/4 x .035 / 152 x 19 x .9	**BETTER** for **medium** metal (3/32” - 3/8”)	5	14T	
	353-414	4 x 3/4 x .035 / 102 x 19 x .9	**BETTER** for **medium** metal (3/32” - 3/8”)	5	14T	
	353-804	8 x 3/4 x .050 / 203 x 19 x 1.3	**BETTER** for **thick** metal (1/8” - 1/2”)	5	10/14T	
	353-835	8 x 3/4 x .035 / 203 x 19 x .9	**BETTER** for general purpose	5	10/14T	
	353-635	6 x 3/4 x .035 / 152 x 19 x .9	**BETTER** for general purpose	5	10/14T	
	353-110	12 x 3/4 x .050 / 305 x 19 x 1.3	**BETTER** for general purpose	5	10/14T	
	353-810	8 x 3/4 x .050 / 203 x 19 x 1.3	**BETTER** for general purpose	5	10T	
	353-610	6 x 3/4 x .035 / 152 x 19 x .9	**BETTER** for general purpose	5	10T	
	353-123	6 x 3/4 x .035 / 152 x 19 x .9	**BETTER** for general purpose	5	8/18T	
	353-969	9 x 7/8 x .063 / 229 x 22 x 1.6	**BEST** for demolition projects	5	8/10T	
	353-646	6 x 3/4 x .050 / 152 x 19 x 1.3	**BETTER** for clean wood and wood with nails	5	6T	
	353-656	6 x 3/4 x .050 / 153 x 19 x 1.3	**BETTER** for clean wood and wood with nails (plunge cutting)	5	6T	
	353-956	9 x 3/4 x .050 / 229 x 19 x 1.3	**BETTER** for clean wood and wood with nails (plunge cutting)	5	6T	
	353-156	12 x 3/4 x .050 / 305 x 19 x 1.3	**BETTER** for clean wood and wood with nails (plunge cutting)	5	6T	
	353-636	6 x 3/4 x .050 / 152 x 19 x 1.3	**BETTER** for drywall and plaster	5	6T	FASTER, ROUGHER
SPECIALTY		**NOTE: Minimum blade length = Material width + 3”**				
	353-800RDG	8 x 3/4 x .039 / 203 x 19 x 1	**BEST** for cast iron pipe, block & brick and other abrasives such as tile	1	Diamond Grit	SLOWER, SMOOTHER
	353-618RS	6 x 3/4 x .039 / 152 x 19 x 1	**BEST** for stainless steel (1/16” - 3/16”); Carbide teeth	1	18T	
	353-6563RCT	6 x 3/4 x .050 / 152 x 19 x 1.3	**BEST** for cement board, fiber board, and plaster; Carbide tipped	1	6T	FASTER, ROUGHER

PVC SAW



CAT. NO.	UPC NO.	DESCRIPTION
322-013	00113	PVC Saw Blade



KEYHOLE/JAW SAW

- **Blade Fixated into Handle** - Enables maximum support of cutting blade
- **Hardened Steel Blade** - Quickly and easily cuts drywall, cement board, plastic, and wood

CAT. NO.	UPC NO.	DESCRIPTION
301A	23641	Keyhole/Jaw Saw with 6" blade



HEAVY-DUTY HACK SAW

- **Large 4-1/2" Throat** - Enables deeper cuts and makes handling easy
- **Heavy-Duty Die** - Cast aluminum handle - virtually break-proof
- **Bi-Metal Blade** - Long cutting life and flexibility

CAT. NO.	UPC NO.	DESCRIPTION
333A	23635	12" Heavy-Duty Hack Saw
333-1218	10037	Bi-Metal Replacement Blade - 18 Teeth Per Inch
333-1224	10038	Bi-Metal Replacement Blade - 24 Teeth Per Inch
333-1232	10039	Bi-Metal Replacement Blade - 32 Teeth Per Inch

GREENLEE®
A Textron Company

GREENLEE MECHANICAL SOLUTIONS
HOLE MAKING



LS100 & SPEED PUNCH® KITS

360° Rotating Head
Punches at any angle

Compatible
Works with all Greenlee knockouts

"Auto Stop" Technology
Prevents damage to punch and die

LED Light
Improves visibility in dark work areas

Lightweight and Compact
Ergonomic one-handed design that fits into tight spaces



LS100

Powerful 18V Li-Ion Battery
Long lasting and charges in 30 minutes



Mild Steel 1/2" to 4" with Speed Punch
LS100L11SB4SP



Stainless Steel 1/2" to 4"
LS100L11SS4



Stainless Steel 1/2" to 2" with Speed Punch
LS100L11SSSP

CAT. NO.	UPC NO.	DESCRIPTION
LS100L11A	03141	LS100 Driver With Batteries, Charger, and Case
LS100LB	03138	LS100 Driver Only With Case
LS100L11SSSP	03148	1/2" – 2" Stainless Steel Speed Punch Kit
LS100L11SS4	03150	1/2" – 4" Stainless Steel Standard Punch Kit
LS100L11SS	03145	1/2" – 2" Stainless Steel Standard Punch Kit
LS100L11SB4SP	03143	1/2" – 4" Mild Steel Speed Punch Kit
LS100L11SBSP	03384	1/2" – 2" Mild Steel Speed Punch Kit
LS100L11SB4	03142	1/2" – 4" Mild Steel Standard Punch Kit
LS100L11SB	03388	1/2" – 2" Mild Steel Standard Punch Kit

LS100 REPLACEMENT PARTS

CAT. NO.	UPC NO.	DESCRIPTION
KK100LFLEX	03151	Replacement Case For LS100 Kits
52176	52176	3.0Ah Li-Ion Battery
52177	52177	1.5Ah Li-Ion Battery
52178	52178	120V AC Charger
52180	52180	12V DV Charger
EAC18120	52191	Corded AC Adapter

Standard Draw Stud End
Works with existing hydraulic and battery-operated punch drivers

No Thread Punch
Easily slides on/off draw stud

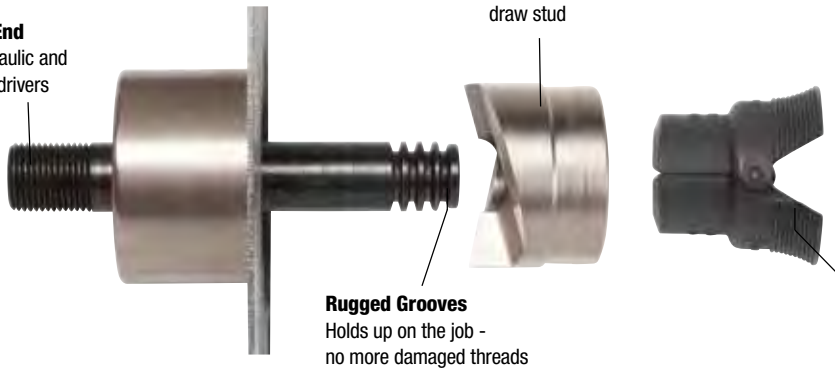

Rugged Grooves
Holds up on the job - no more damaged threads

Speed Lock
Quickly secures the system in place - more holes, less time

GREENLEE®
A Textron Company



7506

SLUG SPLITTER® KNOCKOUT PUNCHES

- **Self-Centering Knockouts** - Aligns itself on pilot hole to punch up through 10 gauge stainless steel

CAT. NO.	UPC NO.	DESCRIPTION
7506	30385	SLUG SPLITTER® 1/2" – 2" Hydraulic Knockout Kit



7310SB

SLUG-BUSTER® KNOCKOUT KIT WITH HYDRAULIC HAND PUMP

- **11-Ton Hydraulic Ram** - Punches 10X faster than wrench method

CAT. NO.	UPC NO.	DESCRIPTION
7310SB	34361	Slug-Buster® 1/2" – 4" hydraulic knockout set



7706SB

QUICK DRAW® HYDRAULIC PUNCH DRIVER KIT

- **Quick Draw® Flex** - Allows unlimited driver orientation to simplify access to work area

CAT. NO.	UPC NO.	DESCRIPTION
7706SB	10476	Standard Quick Draw® Flex 1/2"– 2" Knockout Kit



7906SB

QUICK DRAW® HYDRAULIC PUNCH DRIVER KIT

- **Quick Draw® 90º** -Right angle driver head rotates over 180º for maximum flexibility in tight areas

CAT. NO.	UPC NO.	DESCRIPTION
7906SB	34300	Standard Quick Draw® 90º 1/2" – 2" Driver Knockout Kit



7806-SB

QUICK DRAW® HYDRAULIC PUNCH DRIVER KIT

- **Quick Draw®**- Perfect for fast, straight-on punching

CAT. NO.	UPC NO.	DESCRIPTION
7806-SB	34293	Standard Quick Draw® 1/2" – 2" Driver Knockout Kit

WRENCH KNOCKOUT KITS

High-Impact Carrying Case
Makes for a rugged case



7238SB

1" Hex Ratchet Wrench
Allows use with both 3/8" and 3/4" draw studs



36687

CAT. NO.	UPC NO.	DESCRIPTION
7238SB	34757	Slug-Buster® 1/2" – 2" Ratchet Knockout Set
36687	36687	Standard Round Manual Knockout Kit-Metric

STUD PUNCHES

Punches Holes in Under 2 Seconds
Punches 1-11/32" diameter holes in 16 and 18 gauge structural studs

4" Throat Depth from Center of Punch



Takes Both Time and Hard Work out of the Stud Punching Process

ESP710L11



713

- Punches 2-5/8” diameter hole for installation of 2” water, vent, and waste pipes
- Two speed lever action for fast and easy punching through 24 to 20 gauge metal studs
- 2-1/8” throat fits most studs and channels
- High strength alloy aluminum frame makes for lightweight handling

CAT. NO.	UPC NO.	DESCRIPTION
ESP710L11	52165	Battery Powered Stud Punch
713	06430	Plumber Stud Punch
08377	08377	Punch For Plumber Stud Punch
08379	08379	Die For Plumber Stud Punch
08375	08375	Link For Plumber Stud Punch
55316	55316	Pin, Groove .31 X 1.75 For Plumber Stud Punch

GREENLEE®
A Textron Company



NEW PRODUCT

STEP BITS



Dual Flute
Two cutting edges share the load, resulting in faster drill times with less force

Steam Oxide Finish
Runs cooler and extends the life of the bit

New Split Point Tip
Eliminates walking and penetrates quickly



Cobalt HSS
Engineered for maximum life on stainless steel



35884C

	CAT. NO.	UPC NO.	DESCRIPTION
N	35884C	05793	Cobalt Step Bit Kit (Includes 1/2", 7/8", 1-1/8" Bits and Case)
N	34401C	05789	1/2" Cobalt Step Bit
N	34403C	05790	7/8" Cobalt Step Bit
N	30008C	05792	1-1/8" Cobalt Step Bit



35884

KWIK STEPPER® STEP BITS

- **Steam Oxide Finish** - Runs cooler and extends the life of the bit
- **Unique Split Point Tip** - Penetrates through steel faster
- **Double-Flute Construction** - Balanced bit that requires less pressure

CAT. NO.	UPC NO.	DESCRIPTION
35884	35884	Kwik Stepper® Step Bits
34401	34401	1/2" Multi-Hole Step Bit
34403	34403	7/8" Multi-Hole Step Bit
30008	30008	1-1/8" Multi-Hole Step Bit

08-03-54A

Bit Diameter: 1/2"
Shaft Length: 54"
Shaft Diameter: 3/16"



12-04-54A

Bit Diameter: 3/4"
Shaft Length: 54"
Shaft Diameter: 1/4"

D'VERSIBIT®

- Wood-type auger bit with screw point
- Pulls itself through wood, avoids walking or skidding
- Excellent for drilling in soft woods or through thin sections
- Slow back-taper allows for easy retrieval

CAT. NO.	UPC NO.	DESCRIPTION
08-03-54A	38073	1/2" Type A Auger Bit - 54" Shaft Length
08-03-72A	38074	1/2" Type A Auger Bit - 72" Shaft Length
12-04-54A	38083	3/4" Type A Auger Bit - 54" Shaft Length
12-04-72A	38084	3/4" Type A Auger Bit - 72" Shaft Length

Hex Shank 7/16"



904H-18

BIT EXTENSION

- Extend bit lengths by connecting to hole saw arbors, spade bits, Nail Eater II® bits, electrician's bit and step bits

CAT. NO.	UPC NO.	DESCRIPTION
904H-18	35356	Bit Extension (7/16" x 18")



34AR-6

SELF-FEEDING SPADE BITS

- Self-feeding design requires less effort and reduces vibration
- Unique tapered design allows existing hole enlargement
- 1/4" Quick change hex shank
- Forged and heat treated for long life

CAT. NO.	UPC NO.	DESCRIPTION
34AR-6	03710	Self-Feeding Spade Bit Kit (6 Piece)

COMBINATION DRILL/TAP BITS

CAT. NO.	UPC NO.	DESCRIPTION
DTAPKIT	17620	6-32 to 1/4-20 6-Piece Drill Tap Set
LDTAPKIT	00909	8-32 to 1/4-20 6-Piece Drill Tap Set

* When compared to standard drill, tap and countersink tools



From 6-32NC TO 1/4-20NC

DTAPKIT





From 8-32NC TO 1/4-20NC

LDTAPKIT



GREENLEE®
A Textron Company

QUICK CHANGE CARBIDE TIPPED HOLE CUTTERS



660

Cuts Stainless Steel Quickly and Easily
Precision carbide teeth for optimum performance and durability

Quick Change Arbor
Done with a simple push & turn

Ejector Spring
Makes removal of slug easier on all sizes above 3/4"

Removable Cutter Heads
Sizes 7/8" through 2"

Cobalt-Steel Pilot Drill
Replaceable with split-point tip to prevent walking

CAT. NO.	UPC NO.	DESCRIPTION
660	05766	Quick Change Carbide Tipped Hole Cutter Kit - Sizes 7/8", 1-1/8", 1-3/8", 1-3/4" & 2"



635

CARBIDE TIPPED HOLE CUTTERS

- **Replaceable cobalt steel pilot drill, with split-point tip design** – Improves performance and resists walking; eliminates need for "center punch"
- **Multiple Tungsten Carbide Tips** - Allows for long life and smooth cutting
- Cut fast, accurate, high quality holes in stainless steel, copper, aluminum, and steel
- Flange stop prevents over-drilling

CAT. NO.	UPC NO.	DESCRIPTION
635	03599	Carbide Tipped Hole Cutter Kit - Sizes 7/8", 1-1/8" & 1-3/8"



725-1-3/8

CARBIDE-GRIT HOLE SAW - 1-3/8"

- Long lasting tungsten carbide-grit delivers extremely clean smooth cuts through tile, cement board and other abrasive materials
- Perfect for cutting holes in Quazite® enclosure or hardy board siding for 3-0 box installation
- Rugged construction for enduring performance

CAT. NO.	UPC NO.	DESCRIPTION
725-1-3/8	10075	1-3/8" Carbide-Grit Hole Saw

Quazite is a registered trademark of Hubbell Inc.



930

ULTRA CUTTERS

- Last 10 times longer than standard hole saws
- Precision-ground teeth cut smooth, burr-free holes with ease
- 1/4” capacity
- Durability and speed provide low cost per hole
- Split-point pilot drill prevents “walking” – makes accurate hole placement easy
- Spring-loaded slug ejector saves time
- No tool required to change cutter sizes
- Less chance of broken teeth due to saw body machined out of solid, high-speed steel

CAT. NO.	UPC NO.	DESCRIPTION
930	10214	Ultra Cutter Kit - Sizes 7/8", 1-1/8", 1-7/32", 3/8", 1-3/4", 2" & 2-1/2"



830Q

BI-METAL HOLE SAW KITS

- New arbor allows for rapid mounting or removal of hole saws
- Faster, easier slug removal
- Drill pilot hole without saw:
  - – Eliminates the “bite” when saw crashes into the steel
  - – Provides better ergonomics – reduces stress on wrist, arm and hand
  - – Eliminates obstructed view from hole saw
- Only one arbor required from 7/8" to 6" (7/16" shank recommended for hole saws above 2-1/2")
- Works with recessed light and carbide grit hole saw products as well
- Adapters re-usable to minimize costs
- **Universal** – Works with any brand hole saw

CAT. NO.	UPC NO.	DESCRIPTION
830Q	02806	Quick Change Hole Saw Kit - Sizes 1/2" – 2"
830	19192	Hole Saw Kit For 1/2" – 2"
889	03478	Plumber's Hole Saw Kit - 3/4" – 2-1/4"
890	03479	Industrial Maintenance Hole Saw Kit - 3/4" – 4-3/4"
891	03480	Electrician's/Plumber's Hole Saw Kit - 3/4" – 2-1/2"



830



889



890



891

GREENLEE®
A Textron Company

BI-METAL HOLE SAWS


825-2-9/16


825-3-3/8


825-5/8


825-3-7/8

CAT. NO.	UPC NO.	DESCRIPTION	KIT CAT. NO. 830	889	890	891
825-9/16	19131	9/16" Hole Saw	—	—	—	—
825-5/8	19132	5/8" Hole Saw	—	—	—	—
825-11/16	19133	11/16" Hole Saw	—	—	—	—
825-3/4	19134	3/4" Hole Saw	—	✓	✓	✓
825-13/16	19135	13/16" Hole Saw	—	—	—	—
825-7/8	19136	7/8" Hole Saw	✓	✓	✓	✓
825-15/16	19137	15/16" Hole Saw	—	—	—	—
825-1	19138	1" Hole Saw	—	—	✓	—
825-1-1/16	19140	1-1/16" Hole Saw	—	—	—	—
825-1-1/8	19141	1-1/8" Hole Saw	✓	✓	✓	✓
825-1-3/16	19143	1-3/16" Hole Saw	—	—	—	—
825-1-1/4	19144	1-1/4" Hole Saw	—	—	—	—
825-1-5/16	19145	1-5/16" Hole Saw	—	—	—	—
825-1-3/8	19146	1-3/8" Hole Saw	✓	—	✓	✓
825-1-7/16	19147	1-7/16" Hole Saw	—	—	—	—
825-1-1/2	19148	1-1/2" Hole Saw	—	✓	✓	✓
825-1-9/16	19149	1-9/16" Hole Saw	—	—	—	—
825-1-5/8	19150	1-5/8" Hole Saw	—	—	—	—
825-1-11/16	19151	1-11/16" Hole Saw	—	—	—	—
825-1-3/4	19152	1-3/4" Hole Saw	✓	✓	✓	✓
825-1-13/16	19153	1-13/16" Hole Saw	—	—	—	—
825-1-7/8	19154	1-7/8" Hole Saw	—	—	—	—
825-2	19155	2" Hole Saw	✓	—	✓	✓
825-2-1/16	19157	2-1/16" Hole Saw	—	—	—	—
825-2-1/8	19158	2-1/8" Hole Saw	—	—	—	—
825-2-1/4	19159	2-1/4" Hole Saw	—	✓	✓	✓
825-2-5/16	19160	2-5/16" Hole Saw	—	—	—	—
825-2-3/8	19161	2-3/8" Hole Saw	—	—	—	—

CAT. NO.	UPC NO.	DESCRIPTION	KIT CAT. NO. 830	889	890	891
825-2-1/2	19162	2-1/2" Hole Saw	—	—	✓	✓
825-2-9/16	19163	2-9/16" Hole Saw	—	—	—	—
825-2-5/8	19164	2-5/8" Hole Saw	—	—	—	—
825-2-3/4	19165	2-3/4" Hole Saw	—	—	—	—
825-2-7/8	19166	2-7/8" Hole Saw	—	—	—	—
825-3	19167	3" Hole Saw	—	—	✓	—
825-3-1/8	19168	3-1/8" Hole Saw	—	—	—	—
825-3-1/4	19169	3-1/4" Hole Saw	—	—	✓	—
825-3-3/8	19170	3-3/8" Hole Saw	—	—	—	—
825-3-1/2	19171	3-1/2" Hole Saw	—	—	—	—
825-3-5/8	19172	3-5/8" Hole Saw	—	—	✓	—
825-3-3/4	19174	3-3/4" Hole Saw	—	—	✓	—
825-3-7/8	19175	3-7/8" Hole Saw	—	—	—	—
825-4	19176	4" Hole Saw	—	—	—	—
825-4-1/8	19177	4-1/8" Hole Saw	—	—	✓	—
825-4-1/4	19178	4-1/4" Hole Saw	—	—	—	—
825-4-3/8	19179	4-3/8" Hole Saw	—	—	—	—
825-4-1/2	19180	4-1/2" Hole Saw	—	—	—	—
825-4-3/4	19181	4-3/4" Hole Saw	—	—	✓	—
825-5	19182	5" Hole Saw	—	—	—	—
825-5-1/2	19183	5-1/2" Hole Saw	—	—	—	—
825-6	19184	6" Hole Saw	—	—	—	—
38522	38522	Arbor with Pilot Drill	2	—	—	—
37157	37157	Arbor with Pilot Drill	—	—	—	—
37155	37155	Arbor with Pilot Drill	—	✓	✓	✓
37156	37156	Arbor with Pilot Drill	✓	—	—	—
38526	38526	Pilot Drill	—	✓	✓	✓



NOTES

GREENLEE®
A Textron Company

GREENLEE MECHANICAL SOLUTIONS
BENDING







881CT

HYDRAULIC BENDER

- Conduit bender for 2-1/2” to 4” EMT, IMC, and RIGID
- Fast and easy setup on the jobsite
- True one-shot 90° bends with CT models for quick accurate bends
- Steel reinforced follow bars for long life
- Bend a 90° elbow in 4” RIGID conduit in 95 seconds

CAT. NO.	UPC NO.	DESCRIPTION
881CT	31287	Cam Track Bender for One-Shot 90° Bends In 2-1/2", 3", 3-1/2" & 4" EMT, IMC, & RIGID conduit (without Hydraulic Pump)



884E980

HYDRAULIC BENDER

RIGID Conduit Bender for One-Shot 90°s in 1-1/4" - 4" (5" with Segment Bending Shoe)

- Strong, yet lightweight, portable, pin-assembled aluminum components
- Easy-to-use ram travel scale and charts for accurate bends
- Bend one-shot 90°s in 1-1/4" - 4" RIGID conduit
- Shoes available to bend PVC-coated RIGID conduit
- Optional 1802 bending table available for easier operation

CAT. NO.	UPC NO.	DESCRIPTION
884E980	34209	1-1/4" Through 4" RIGID Conduit Bender with 980 Electric Hydraulic Pump
885E980	34210	1-1/4" Through 4" One Shot and 5" Segment RIGID Conduit Bender with 980 Electric Hydraulic Pump

GREENLEE®
A Textron Company



TUBE BENDER



CAT. NO.	UPC NO.	DESCRIPTION
24134	24134	MINI Bender Set 1/4", 5/16", 3/8" & 1/2"
24130	24130	Ratcheting Handle Only
24002	24002	Tube Bending Former 1/4"
24006	24006	Tube Bending Former 3/8"
24008	24008	Tube Bending Former 1/2"



23022X

MAXIBENDER

- **Safe Transport** - Handle will not open during transport
- **Mechanical Ratchet Feed** - Quick precise bending
- **Optimum Bending Results** - Plastic bending segments with increased conductivity
- **Release Lever** - Quick release and reset of the bending former
- **Adjustable Bending Frame** - Production of U-bends, counter bends, swan-neck bends, and connecting bends possible at all levels

CAT. NO.	UPC NO.	DESCRIPTION
23022X	05740	MAXIBENDER Set 3/8", 1/2", 5/8", 3/4", 7/8"
23064	23064	MAXIBENDER MSR Set 1/2", 3/4" & 1" Viega Fostapex
23001	23001	MAXIBENDER Support With R/L Formers
23010	23010	MAXIBENDER Forming Shoe 3/8"
23011	23011	MAXIBENDER Forming Shoe 1/2"
23012	23012	MAXIBENDER Forming Shoe 5/8"
23013	23013	MAXIBENDER Forming Shoe 3/4"
23014	23014	MAXIBENDER Forming Shoe 7/8"



25136

STANDARD TWO-HANDED BENDER

- **Accurate Bending** - Minimum size chart and bending radius display on measurement scale
- For accurate bending up to 180° of pipes made of soft copper, aluminum and precision steel
- Bending radius display of 0° – 180° for accurate bending
- Clamp mechanism for better pipe hold allows the bending of shorter pipe pieces
- Light construction allows for fatigue-free hand operation

CAT. NO.	UPC NO.	DESCRIPTION
25131	25131	Standard Two-Handed Bender 5/16"
25136	25136	Standard Two- Handed Bender 5/8"
90614	80280	Standard Handed Multi-Bender - 1/2", 5/8", 3/4" & 7/8" O.D.
25913	25913	Standard Handed Tube Bender Pro 3/8"
25914	25914	Standard Handed Tube Bender Pro 5/8"

ROBEND™ 3000



25001



Pre-Adjustment of the Bending Angle Without Tools
Fast and precise bending

Forged Aluminum Former with Bending Radius Scale
Easy to use

Special ROLUB Guide Shoe
Bending without deformation or ripples due to less friction

High-Performance 101 W Motor
Ideal for continuous operation

Bending Technology
Simplified work preparation, eliminates costs of purchase and storage of fittings

Automatic Switch-Off When Preset Bending Angle is Obtained
Fast batch production possible

CAT. NO.	UPC NO.	DESCRIPTION
25001	25001	ROBEND™ 3000 Set - 1/2", 5/8", 3/4", 7/8", 1" & 1-1/8"
25652R	03413	ROBEND™ 3000 Forming Shoe 1/2"
25616	01219	ROBEND™ 3000 Forming Shoe 5/8"
25619	03412	ROBEND™ 3000 Forming Shoe 3/4"
25622	01222	ROBEND™ 3000 Forming Shoe 7/8"
25625	01223	ROBEND™ 3000 Forming Shoe 1"
25626	00870	ROBEND™ 3000 Forming Shoe 1-1/8"
25120	25120	Bending Spray - 150ML
58182	58182	Tri-Pod Stand
7620521	20521	ROLUB Guide Shoe 7/8" ROBEND™ 3000

GREENLEE®
A Textron Company

GREENLEE MECHANICAL SOLUTIONS
EXPANDING, FLARING & EXTRACTING

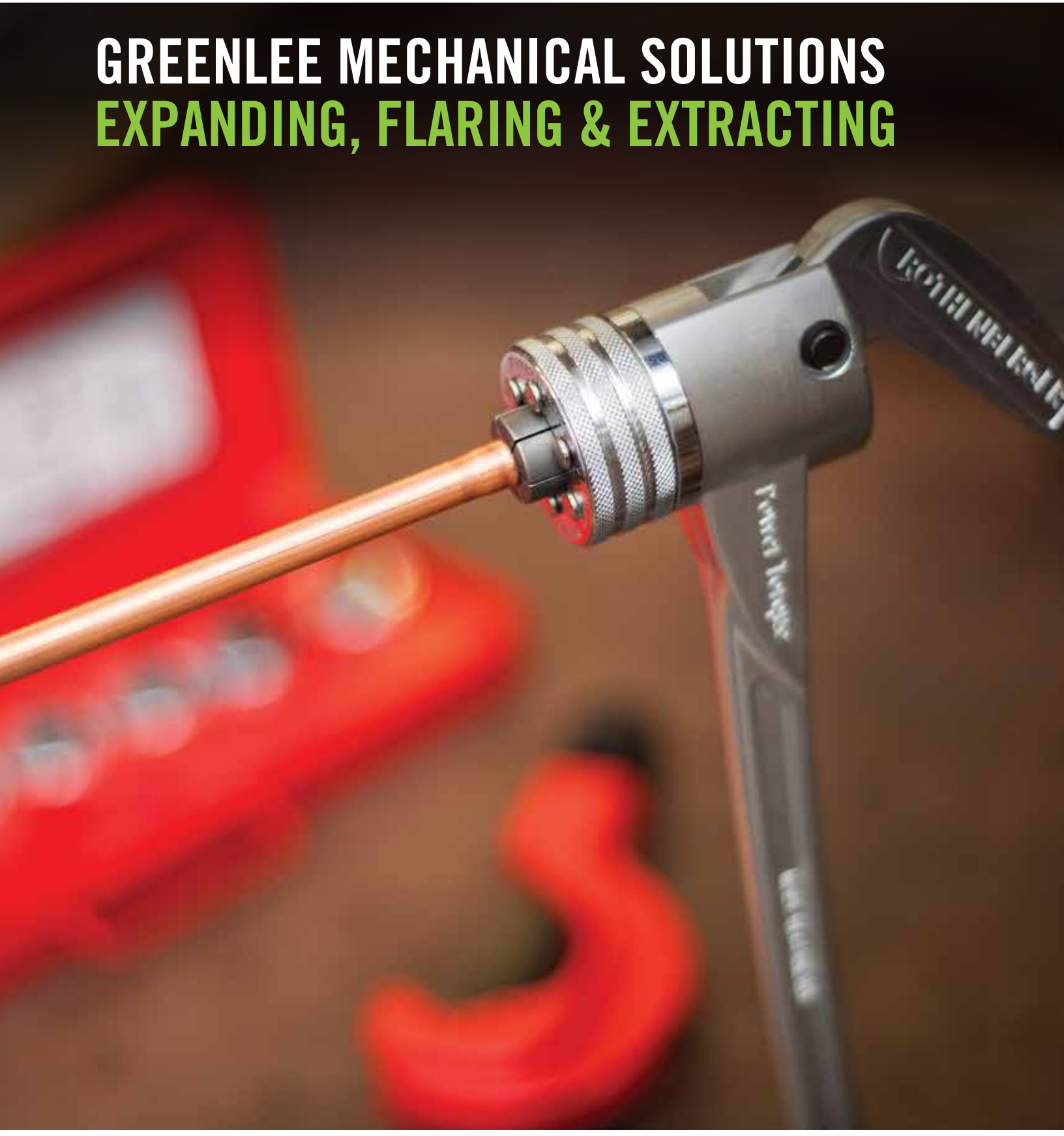

ROCAM™ EXPANDER

EPT™ - Technology
Concealed bent lever

Expanding Dimension and adjustment of capillary gap with the K50 fine adjustment screw

High-Performance Aluminum Body
Light weight, optimal handling

Long Lever Arms
Reduces effort required

Expanding
Up to 50% reduction in labor, soldering materials, joints and energy

Extra Long Segments
Reliable pipe connection according to DVGW standards

Steel Receptacle
Tough and wear-resistant

Ergonomic Handles
No slipping or clamping

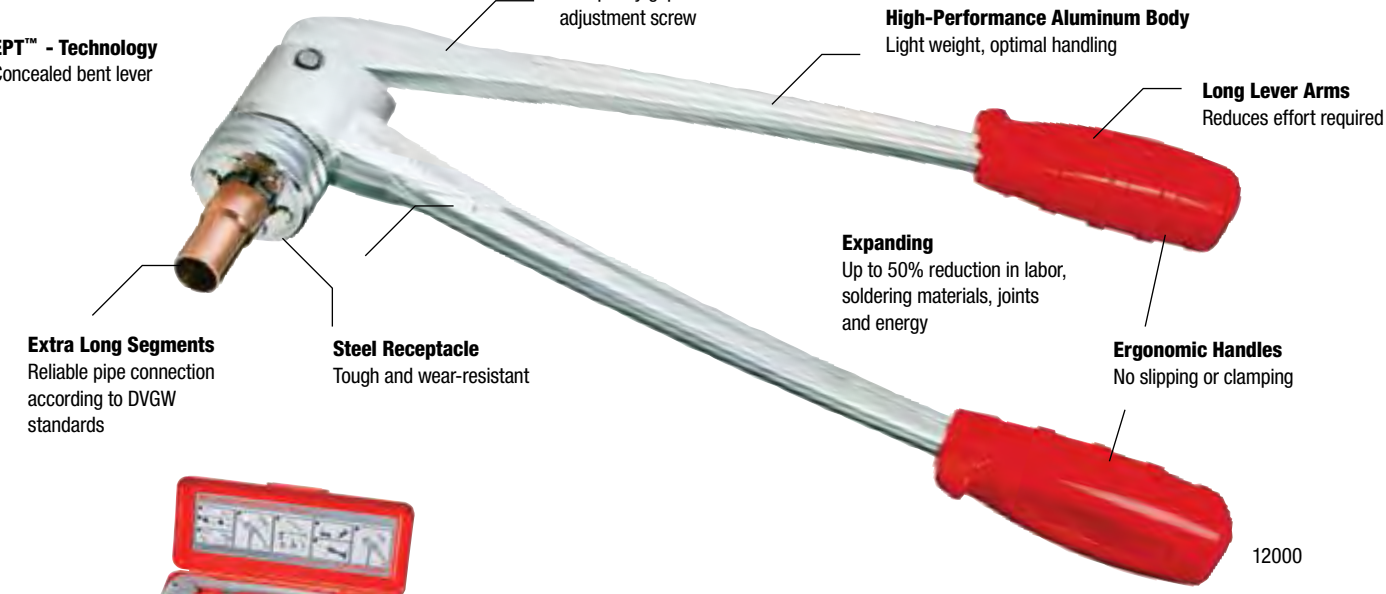

12000

12318

CAT. NO.	UPC NO.	DESCRIPTION
12000	12000	ROCAM™ Expander Tool
12318	12318	ROCAM™ Expander Set - 3/8", 1/2", 5/8", 3/4", 7/8" & 1-1/8"
12324	12324	ROCAM™ Expander Set - 1/2", 5/8", 7/8" & 1-1/8"
11008	11008	Expander Head - 5/16"
11052	11052	Expander Head - 3/8"
11053	11053	Expander Head - 1/2"
11054	11054	Expander Head - 5/8"
11055	11055	Expander Head - 3/4"
11056	11056	Expander Head - 7/8"
11057	11057	Expander Head - 1"
11058	11058	Expander Head - 1-1/8"
11035	11035	Expander Head - 1-3/8"
11062	11062	Expander Head - 1-5/8"
11006R	11006	Internal & External Deburrer - Copper & Plastic 1/8" – 1-5/8"



26715

ROFORM™

- For producing precision 45° single flares and precision sockets on soft and hard tubes

CAT. NO.	UPC NO.	DESCRIPTION
26711	26711	ROFORM™ SET 6 - 8 - 10 - 12 - 14 - 16 MM
26710	26710	ROFORM™ SET 6 - 8 - 10 - 12 - 14 - 16 MM
26715	26715	ROFORM™ SET 3/16", 1/4", 5/16", 3/8", 1/2" & 5/8"



Set Includes - Basic tool, 45° cone, expander pin, internal and external deburrer dia. 1/8" – 1-1/2" (11006), ROTRAC Tube Cutter 28 dia. 1/8" – 1-1/8" (70010) and plastic case

GREENLEE®
A Textron Company



26032

ROFLARE®

- **Hardened and Polished Flare Core** - High quality flare sealing surface
- **Special Screw Thread** - Allows smooth, efficient deformation of material
- **Made from High Quality Steel** - Long-lasting
- **"Multi-block" Multi-Clamping Calipers** - Firm, quick, off-center clamping of the tube and automatic self-centering; tubes don't slip
- Mold available in metric and English measurements

CAT. NO.	UPC NO.	DESCRIPTION
26038	26038	ROFLARE® Single 6 - 8 - 10 - 12 - 14 - 16 mm
26022	26022	ROFLARE® Double 6 - 8 - 10 - 12 - 14 - 16 mm
26036	26036	ROFLARE® Single 3/16", 1/4", 5/16", 3/8", 1/2" & 5/8"
26032	26032	ROFLARE® 37° Single 3/16", 1/4", 5/16", 3/8", 1/2" & 5/8"
26033	26033	ROFLARE® Single/Double 3/16", 1/4", 5/16", 3/8", 1/2" & 5/8"
26034	26034	ROFLARE® Adapter Double 1/16", 1/4", 5/16", 3/8" & 1/2"
26039	26039	ROFLARE® Adapter For 180° Flares



22124



TEE-EXTRACTOR SET

- **Optimum Capillary Gap** - Professional extractions
- **Limits the Insertion Depth** - Optimal positioning
- **No Pipe Removal** - Extractions even on installed pipes possible

CAT. NO.	UPC NO.	DESCRIPTION
22124	22124	Tee-Extractor Set, 1/2", 5/8", 7/8" & 1-1/8"
22081	22081	Extractor Ratchet, 3/8" – 1-3/4"
21575	21575	UNIDRILL 42, 3/8" – 1-5/8"
22080	22080	Extractor Cam Pincer, 1/2" – 1-1/2"
22061	22061	Tee-Extractor Parts - Hook & Bell 1/2"
22016	22016	Tee-Extractor Parts - Hook & Bell 5/8"
22062	22062	Tee-Extractor Parts - Hook & Bell 3/4"
22063	22063	Tee-Extractor Parts - Hook & Bell 7/8"
22064	22064	Tee-Extractor Parts - Hook & Bell 1"
22065	22065	Tee-Extractor Parts - Hook & Bell 1-1/8"
22066	22066	Tee-Extractor Parts - Hook & Bell 1-1/4"
22035	22035	Tee-Extractor Parts - Hook & Bell 1-3/8"
22038	22038	Tee-Extractor Parts - Hook & Bell 1-1/2"
22068	22068	Tee-Extractor Parts - Hook & Bell 1-5/8"

NOTES

GREENLEE®
A Textron Company

GREENLEE MECHANICAL SOLUTIONS
PRESSING



ROCONNECT® COMPACT



Twist and Release Locking Pin
Enables quick exchange of pressing jaws

Over Molded Tacky Grip
Enables easy one-handed operation

350° Rotating Jaw
Easily fits into tight spaces

Lightweight and Compact
Easy to access hard to reach areas

Push Button
One trigger controls all tool functions

Battery and Pressing Force LED Monitor
Displays battery charge and tool maintenance status

LED Work Light
Illuminates for safety when working in dark areas

High Quality 18V Makita Battery
Long lasting battery

16002

CAT. NO.	UPC NO.	DESCRIPTION
16001	16001	ROCONNECT® Compact Tool, No Jaws
16002	16002	ROCONNECT® Compact Tool, Set 1/2", 3/4", 1" Jaws, Battery, Charger
15031V	05031	ROCONNECT® Compact Jaws 1/2" Copper
15032V	15032	ROCONNECT® Compact Jaws 3/4" Copper
15033V	15033	ROCONNECT® Compact Jaws 1" Copper
15930	15930	ROCONNECT® Compact Jaws 3/8" PEX
15931	15931	ROCONNECT® Compact Jaws 1/2" PEX
15932	15932	ROCONNECT® Compact Jaws 5/8" PEX
15933	15933	ROCONNECT® Compact Jaws 3/4" PEX
15934	15934	ROCONNECT® Compact Jaws 1" PEX
15935	15935	ROCONNECT® Compact Jaws 1-1/4" PEX

GREENLEE®
A Textron Company



16102

ROCONNECT® CORDLESS

- **Interchangeable Pressing Jaws** - Flexible and cost-effective
- **Lightweight Pistol Design** - Effortless pressing
- **LED Display** - Shows tool information
- **Easy One-Handed Operation** - Secure grips and innovative 2-component housing
- **High Quality 18V Makita Battery** - Long lasting battery
- **Light Illumination** - For safety when working

CAT. NO.	UPC NO.	DESCRIPTION
16101	16101	ROCONNECT® Cordless Tool, No Jaws
16102	16102	ROCONNECT® Cordless Tool Set, 1/2" – 2" Jaws, Battery, Charger
15222X	15222	ROCONNECT® Cordless Jaws, 1/2" Copper
15223X	15223	ROCONNECT® Cordless Jaws, 3/4" Copper
15224X	15224	ROCONNECT® Cordless Jaws, 1" Copper
15225X	15225	ROCONNECT® Cordless Jaws, 1-1/4" Copper
15226X	15226	ROCONNECT® Cordless Jaws, 1-1/2" Copper
15227X	15227	ROCONNECT® Cordless Jaws, 2" Copper
15251X	15251	ROCONNECT® Cordless Jaw, 3/8" PEX
15252X	15252	ROCONNECT® Cordless Jaw, 1/2" PEX
15253X	15253	ROCONNECT® Cordless Jaw, 5/8" PEX
15254X	15254	ROCONNECT® Cordless Jaw, 3/4" PEX
15255X	15255	ROCONNECT® Cordless Jaw, 1" PEX
15256X	15256	ROCONNECT® Cordless Jaw, 1-1/4" PEX
14486	14486	Go/No Go Calibration Gauge 3/8", 1/2", 5/8", 3/4" ASTM F1807 PEX
14487	14487	Go/No Go Calibration Gauge 3/8", 1/2", 3/4", 1" ASTM F1807 PEX



12428



12427

PEX HAND CRIMPERS

- Constructed of hardened steel for durability with an ultra-lite fiberglass reinforced composite handle
- PEX crimpers are ideal for making reinforced crimp ring connections in potable water and radiant heating applications
- Crimps meet ASTM F1807 specifications
- Each tool is supplied with a GO/NO-GO gauge
- Crimp cavity does not skive the copper ring or cause it to fishtail during crimping process
- Glass-filled composite handles reduce fatigue especially when working overhead
- Properly maintained crimpers are expected to make over 100,000 crimps in their life cycle
- Minimal calibration adjustments
- Tool length is 12"

CAT. NO.	UPC NO.	DESCRIPTION
12425	12425	PEX Hand Crimper, 1/2"
12426	12426	PEX Hand Crimper, 3/4"
12427	12427	PEX Hand Crimper, 1"
12428	12428	PEX Combo Hand Crimper, 1/2" & 3/4"
14486	14486	Go/No-Go Gauge, 3/8", 1/2", 5/8" & 3/4" Crimps
14487	14487	Go/No-Go Gauge, 3/8", 1/2", 3/4" & 1" Crimps

NOTES

GREENLEE®
A Textron Company

GREENLEE MECHANICAL SOLUTIONS
THREADING, ROLL GROOVING, ACCESSORIES & DIES







70905X



70614

SUPER CUT RATCHET THREADER

- **Secure Hold** - Positive octagonal universal drive with retainer locking
- **Fits All Rothenberger Manual and Power Threaders** - Simple insertion and removal of die heads
- **Offset Lever** - Easy operation in hard-to-reach places
- **Quick Adjustment** - Convenient, lockable reversal of the ratchet direction
- **Precision Dies** - Made of high quality tempered steel for long service life
- **Long Lever** - Optimum force transfer

CAT. NO.	UPC NO.	DESCRIPTION
70903X	70903	Super Cut Threading Set - 1/2", 3/4" & 1" NPT
70901X	70901	Super Cut Threading Set - 1/2", 3/4", 1" & 1-1/4" NPT
70905X	70905	Super Cut Threading Set - 1/2", 3/4", 1", 1-1/4", 1-1/2" & 2" NPT
P70905C	70905	Super Cut Threading Set - 1/2", 3/4", 1", 1-1/4", 1-1/2" & 2" NPT for Plastic-Coated Pipe
70840X	00131	Ratchet Handle No. 1 - 1/4" – 1-1/4"
71272	71272	Ratchet Handle No. 2 - 1-1/2" – 2"
71273	71273	Die Head Adapter for Die Heads up to 1-1/4"
70614	70614	Super Cut Deluxe Threading Kit

SUPER CUT DELUXE THREADING KIT

Set Includes - SUPER CUT Ratchet Handle (70840X), Quick Change Die Heads NPT (1/2" 70912X, 3/4" 70913X, 1" 70914X), SUPER 1-1/4" Steel Pipe Cutter (70040), Water Pump Pliers 10" (70522), 14" Heavy Duty Pipe Wrench (70153), Teflon Tape, and Plastic Case

Teflon® is a registered trademark of the Chemours Company

GREENLEE®
A Textron Company

SUPERTRONIC™ 2000



00074

- **Hardened, Interlocking Prism Pipe Clamp** - Secure grip in both turning directions
- **Large Mechanism for Switching Directions** - User friendly work
- **Strong 1010W Motor, 2X Insulated with VDE and CEE, Interference Free** - Universal motor for reliable, professional long-term use
- **1010W Universal Motor** - Low energy consumption
- **Compact Gear Housing** - Ideal for confined spaces
- **Off-Set Die Head Mounting** - Threading possible even close to walls
- **Direct Seating with Tension Ring Locking** - Die heads are held firmly in place

CAT. NO.	UPC NO.	DESCRIPTION
71259L	03363	SUPERTRONIC™ 2000 Set - 1/2", 3/4", 1", 1-1/4", 1-1/2" & 2" NPT
P71259C	71259	SUPERTRONIC™ 2000 Set For Plastic-Coated Pipe - 1/2", 3/4", 1", 1-1/4", 1-1/2" & 2" NPT
71280	01278	Forged Pipe Clamp, Max 2"
70045	70045	Steel Pipe Cutter 2"
70752	70752	Tri-Bench with Chain Vise
71273	71273	Die Head Adapter 1/4" – 1-1/4" (Super Cut)
71271	71271	Adapter, ROFIX with Ring
71259	07125	SUPERTRONIC™ 2000 Machine Only





SUPERTRONIC 2SE

Thread 1/2"-2" Pipe

Automatic Die Head with Through-The-Head Oiling - Easy to use

Smooth Action Impact Hammer Chuck - Pipes don't slip

Ball Detent Dies - Quick and easy to change

Rear Centering Chuck - For axial alignment of the pipe

Internal Deburring Blade - Removes sharp edges

Work Spindle with Closed Bearings on Both Sides - Low-wear and precise guiding

Sturdy Oil Pump - High flow power with filter system and integrated oil feed for optimal lubrication and cooling



63004

Large Shavings Collection Trough - Easy to clean

Dual-Sided Tool Guide - Precise guiding



00230

ROPOWER 50R (63005) - Uses RIDGID® compatible dies, thread 1/2" – 2" pipe

CAT. NO.	UPC NO.	DESCRIPTION
63004	63004	SUPERTRONIC 2SE Threader with Automatic Die Head - NPT Alloy Dies 1/2" – 2"
63005	63005	ROPOWER 50R Threader with Automatic Die Head - NPT Alloy Dies 1/2" – 2"
00230	00230	Collapsible Folding Wheeled Stand (2SE/50R)
56511	56511	Mounting Kit for ROGROOVER

RIDGID® is a registered trademark of Ridgid Tool Co.

GREENLEE®
A Textron Company

SUPERTRONIC 4SE

Thread 1/2"-4" Pipe

Automatic Die Head - Ensures proper thread length and depth

Automatic Oil Feed - Provides ideal lubrication and cooling to maximize die life

Self-Centering Pipe Cutter - Quickly cuts pipe to length

Internal Deburring Blade - Removes sharp edges

Oil Resistant Power Cable - Long life

Ball Detent Dies - Quick and easy to change

Large Plastic Chip Tray - Catches chips and is easy to clean

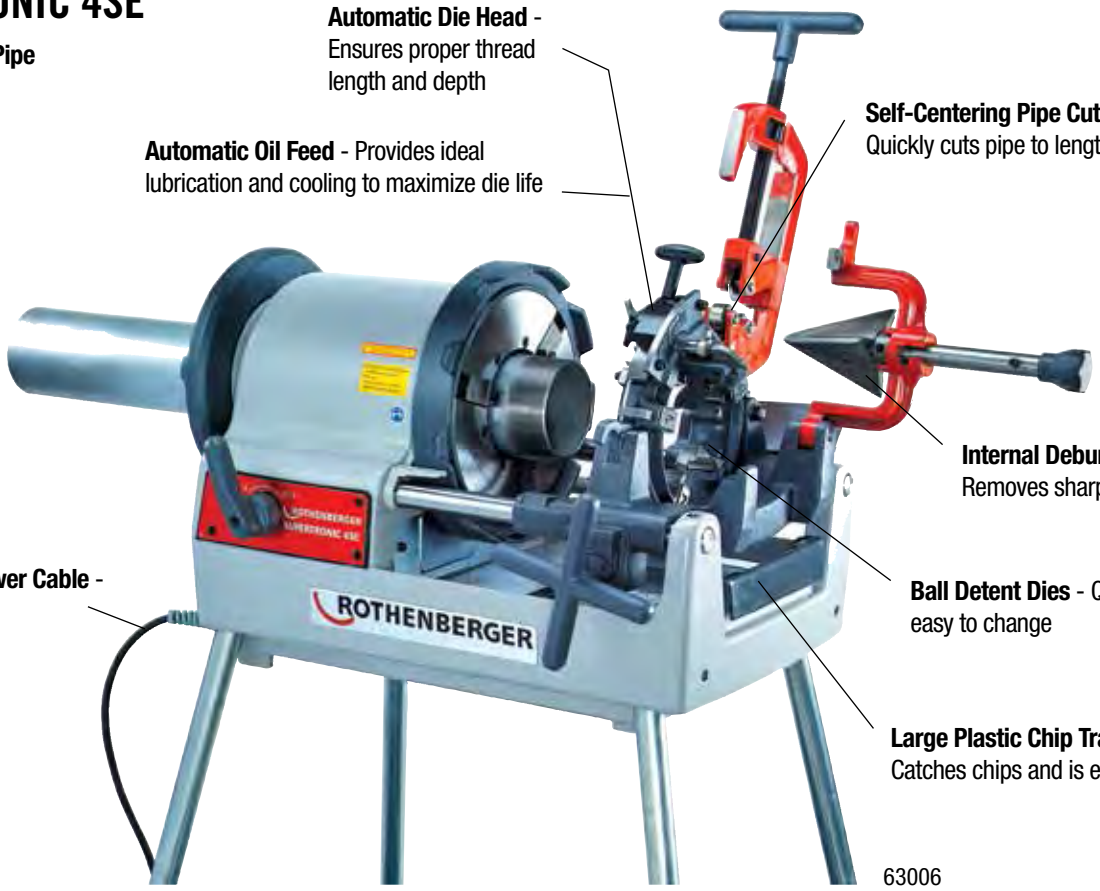

63006



E-239
For 63006 and 00550

CAT. NO.	UPC NO.	DESCRIPTION
63006	63006	Threading Machine, SUPERTRONIC 4SE
52500	91175	Automatic Die Head 1/2" – 2"
64401	64401	Automatic Die Head, 2-1/2" – 4" NPT
89101	91176	Alloy Die Set, 1/2" – 3/4" NPT
89102	91177	Alloy Die Set, 1" – 2" NPT
59912	91179	Alloy Die Set for Die Head 64401 2-1/2" – 4" NPT
56512	56512	ROGROOVER Mounting Kit (4SE)
E-239	32054	Cabinet with Wheels for Threader Storage
04510R	04510	Cutter Wheel

COLLINS CLASSIC 22A

Thread up to 1/8" – 2" Pipe

Thread up to 1/4" – 2-1/4" Bolt or Rod

Automatic Quick Grip Chuck
R/L chucking, 4 double chucks at the front and rear ensure pipe is automatically gripped and centered with maximum power

Precision Pipe Cutter and 5-Blade Deburrer
Precise cutting and deburring driven on both sides

Chuck Jaws Easy To Exchange
Easy to maintain

Oil Pump with Integrated Oil Feed
Optimal cooling and lubrication

Central Lubrication for Spindle Drive
Easy maintenance

Large Shavings Collection Trough
Easy to empty

Guide Sled with Rack-Drive
Precise guiding driven on both sides



00579R

CAT. NO.	UPC NO.	DESCRIPTION
00579R	91067	Collins Classic 22A with SNAP-O-MATIC™ Die Heads/Dies, 72 RPM, 115V
00592R	91250	SNAP-O-MATIC™ Die Heads/Dies, 230V
00596R	91248	UNIQUAD Die Heads/Dies, 72 RPM, 115V
00597	00597	Automatic Die Heads/Dies, 72 RPM, 115V
00575	00575	RIDGID® Compatible Automatic Die Heads/Dies
00585R	71068	Basic 22A Unit without Die Heads/Dies
01623	01623	Replacement Jaws (Set 8)
20533	20533	Low Indent Jaws for Plastic-Coated Pipe (Set 8)
00157	00157	Spare Cutter Wheel - 1 PC
00158	91070	Spare Cutter Wheel - 6 PC
00045	91072	Open Wheeled Stand with Tool Tray
00154	00154	Waterproof Cover
45001	91066	Mounting Kit for ROGROOVER - 22A Threader

RIDGID® is a registered trademark of Ridgid Tool Co.

GREENLEE®
A Textron Company



00550

RHINO™

- **Thread up to 1/8" – 4" pipe**
- **Thread 5/8" – 2-1/4" bolt or rod**

CAT. NO.	UPC NO.	DESCRIPTION
00550	91074	RHINO™ Complete Machine with 2-1/2" – 4" Automatic Die Heads & Dies
P00551C	00552	RHINO™ Complete Machine with 2-1/2" – 4" Automatic Die Heads & Dies for Plastic-Coated Pipe
00561R	91075	RHINO™ Optional 1/2" – 2" Package with Automatic Die Heads & Dies & Conical Reamer
00097	91076	Reamer 1/8" – 2" Conical, 5 Blade Reamer Assembly
00107	91077	Reamer Assembly 2-1/2" – 4" Twin-Edged Blade
00106	91078	Cutter Assembly
00104	91079	Spare Cutter Wheel (One Only)
00105	00105	Spare Cutter Wheel (3 Pk)
00548	00548	Open Wheeled Stand with Tool Tray
45004	45004	Mounting Kit for ROGROOVER (RHINO™)



00039

COLLINS 44A 4" THREAD-O-MATIC™

- **Range** - Pipe or conduit 1/2" – 4" Bolt or Rod 5/8" – 3"
- **Dimensions** - 60" x 30" x 44-1/2" (L x W x H)
- **Motor** - 5 H.P, 230/460V 3 phase, 50-60 Hz 1170 RPM (Instant Reversing)
- **Spindle Speed While Threading** -
  1/2" – 1" 40 RPM
  1-1/4" – 2" 26 RPM
  2-1/2" – 3" 16 RPM
  3-1/2" – 4" 12 RPM
- **Switches** - Three-station push button switch (forward-stop-release) optional toggle type (right hand-left hand)
- **Starter** - Magnetic with thermal overload
- **Oil Reservoir** - 5 gallon capacity

CAT. NO.	UPC NO.	DESCRIPTION
00039	91083	44A THREAD-O-MATIC™ Die Head/Dies 1/2" – 4" NPT
00104	91079	Cutter Wheel (44A & 66A)



00579R

COLLINS 66A 6" THREAD-O-MATIC™

- **Range** - Pipe or conduit 1" – 6" Bolt or Rod 1-1/4" – 4"
- **Dimensions** - 48-3/8" x 30" x 45-3/4" (L x W x H)
- **Motor** - 5 H.P, 230/460V 3 phase, Dual-Speed 50-60 Hz 1170 RPM (Instant Reversing)
- **Spindle Speed While Threading** -
  1/2" – 2" 62 RPM
  2-1/2" – 3" 32 RPM
  3-1/2" – 4" 16 RPM
  5" – 6" 11 RPM
- **Switches** - Three-station push button switch (forward-stop-release) optional toggle type (right hand-left hand)
- **Starter** - Magnetic with thermal overload
- **Oil Reservoir** - 5 gallon capacity

CAT. NO.	UPC NO.	DESCRIPTION
00174	91084	66A THREAD-O-MATIC™ Die Head/Dies 1/2" - 6" NPT
00104	91079	Cutter Wheel (44A & 66A)



R01850

NIPPLE CHUCKS

- Nipple chucks convert unthreaded or short pipe lengths into useful close-threaded nipples
- For 1/2" – 2" pipe – Up to schedule 80
- Patented mechanism expands and self-locks pipe from inside for work on short pipe lengths
- Individual nipple chucks 1/2" – 2" are used with 63004, 63005 & 63006

CAT. NO.	UPC NO.	DESCRIPTION	USE WITH
R01850	01850	External Nipple Chuck Set 1/2" - 2"	2SE, 50R, 4SE, RHINO®, 22A, 44A & 66A Threading Machines
00184	00184	Nipple Chuck 1/2"	2SE, 50R & 4SE Threading Machines
00186	00186	Nipple Chuck 1"	2SE, 50R & 4SE Threading Machines
00187	00187	Nipple Chuck 1-1/4"	2SE, 50R & 4SE Threading Machines
00188	00188	Nipple Chuck 1-1/2"	2SE, 50R & 4SE Threading Machines
00189	00189	Nipple Chuck 2"	2SE, 50R & 4SE Threading Machines
00191R	00191	Nipple Chuck, 3/4"	RHINO™, 22A, 44A & 66A Threading Machines
00089	91086	Nipple Max Set 1/2" – 2" NPT	RHINO™, 22A, 44A & 66A Threading Machines
00072	91087	Nipple Chuck Assembly for 2-1/2" – 4" Pipe	44A & 66A Threading Machines
00098	91088	Nipple Chuck Assembly for 2-1/2" – 4" Conduit	44A & 66A Threading Machines
00073	91089	Nipple Chuck Assembly for 5" – 6"	66A Threading Machines



USE WITH SUPERTRONIC 2SE (63004) AND ROPOWER 50R (63005)



USE WITH SUPERTRONIC 4SE (63006)

GREENLEE®
A Textron Company



8870922

ROGROOVER 6"

- Portable rolling groover for standard and thin-walled steel pipes up to 6"
- **Ratchet Drive R/L for Adjusting Depth of Standard Conforming Groove** - Convenient, easy, and fast
- **Lightweight Aluminum Casing** - Easy to transport
- **Spacer for Standard Groove Depths** - Adjustable and finely-controlled arrester for consistent groove depth
- **Case-Hardened Knurled Pressure Drive Rollers** - Easy assembly/dismantling - long life
- **Allen Key Mount** - Always on hand



CAT. NO.	UPC NO.	DESCRIPTION
8870922	03673	Base Unit - ROGROOVER 6"
56511	56511	ROGROOVER Mounting Kit (ROPOWER 50R & SUPERTRONIC™ 2SE)
45001	91066	ROGROOVER Mounting Kit (COLLINS Classic 22A)
45002	45002	ROGROOVER Mounting Kit (RIDGID® 300)
45004	45004	ROGROOVER Mounting Kit (RHINO®)
56512	56512	ROGROOVER Mounting Kit (SUPERTRONIC™ 4SE)

RIDGID® is a registered trademark of Ridgid Tool Co.



01050

ROGROOVER 2"-12"

- Sturdy hydraulic pump with precisely formed grips for ideal handling
- Compact & stable machine design
- Powerful yet quiet motor
- Fine adjustment for groove depth & regulation
- Pressure valve for quick modifications
- Heavy-Duty roller pipe support included

CAT. NO.	UPC NO.	DESCRIPTION
01050	01050	ROGROOVER 2"-12" W/ Pipe Stand
88737	88737	Roll Groove Set 2"-6"
88738	88738	Roll Groove Set 3"- 6"
88739	88739	Roll Groove Set 8"-12"
15034	15034	ROGROOVER Diameter Measuring Tape



70289

RATCHET PIPE REAMER

- For 1/4" – 2" steel pipes, with smooth-running ratchet, cutting bit made of tempered steel
- **Quick adjustment** - Handy, lockable reversal of the ratchet direction

CAT. NO.	UPC NO.	DESCRIPTION
70289	70289	Ratchet Pipe Reamer
70296	70296	Spare Reamer Blade



R04270753R

BUCKET OILER

- Heavy-Duty steel drip pan
- Easy, ergonomic two-finger trigger
- Lightweight and portable
- Sturdy construction for leak proof use
- Swivel nozzle for easy use
- Rust proof strainer for long life
- Includes (1) gallon ROCOOL® oil

CAT. NO.	UPC NO.	DESCRIPTION
R04270753R	70753	Bucket Oiler
R50009R	50009	Oil Gun for Bucket Oiler


65008


65013

RONOL™ SPRAY OIL

RONOL™ - High-Performance Cutting Oil

- Mineral oil basis
- **For Threading of all Materials, Including Stainless Steel**

*Mineral-based threading oils may not be permissible in drinking water installations - please check the pertinent standards in your area

RONOL™ - High-Performance Cutting Fluid

- No mineral oils, purely synthetic
- Developed and approved for drinking water and plumbing installations

CAT. NO.	UPC NO.	DESCRIPTION
65008	01301	RONOL™ Threading/Cutting Mineral Spray Oil
65013	01553	RONOL™ Threading/Cutting Synthetic Spray Oil


462-1


463-1

THREADING/CUTTING OIL

- Premium quality, high lubricity for easier cutting and long tool life
- Choice of light or dark

CAT. NO.	UPC NO.	DESCRIPTION
462-Q	28237	Dark Threading/Cutting Oil - 1 Qt.
462-1	26096	Dark Threading/Cutting Oil - 1 Gal
463-Q	28238	Light Threading/Cutting Oil - 1 Qt.
463-1	28239	Light Threading/Cutting Oil - 1 Gal

GREENLEE®
A Textron Company

PRECISION DIE HEADS FOR SUPERTRONIC™ 2000

SIZE	NPT CATALOG	UPC	FOR PLASTIC-COATEDPIPE, NPT	UPC	DESCRIPTION
3/8"	70908X	70908	—	—	SUPERTRONIC™™ 2000 Die Head 3/8"
1/2"	70912X	70912	P70912C	70912	SUPERTRONIC™™ 2000 Die Head 1/2"
3/4"	70913X	70913	P70913C	70913	SUPERTRONIC™ 2000 Die Head 3/4"
1"	70914X	70914	P70914C	70914	SUPERTRONIC™ 2000 Die Head 1"
1-1/4"	70915X	70915	P70915C	70915	SUPERTRONIC™ 2000 Die Head 1-1/4"
1-1/2"	70849X	70849	P70849C	70849	SUPERTRONIC™ 2000 Die Head 1-1/2"
2"	70850X	70850	P70850C	70850	SUPERTRONIC™ 2000 Die Head 2"

SIZE	CATALOG	UPC	DESCRIPTION
3/8"	70917X	70917	SUPERTRONIC™ 2000 3/8" NPT Precision Threading Die
1/2"	70918X	70918	SUPERTRONIC™ 2000 1/2" NPT Precision Threading Die
3/4"	70919X	70919	SUPERTRONIC™ 2000 3/4" NPT Precision Threading Die
1"	70920X	70920	SUPERTRONIC™ 2000 1" NPT Precision Threading Die
1-1/4"	70921X	70921	SUPERTRONIC™ 2000 1-1/4" NPT Precision Threading Die
1-1/2"	70945X	70945	SUPERTRONIC™ 2000 1-1/2" NPT Precision Threading Die
2"	70946X	70946	SUPERTRONIC™ 2000 2" NPT Precision Threading Die

COLLINS CLASSIC 22A

	1/8"		1/4" & 3/8"		1/2" & 3/4"		1" & 1-1/4"		1-1/2" & 2"		1" & 2"	
DESCRIPTION	CAT. NO.	UPC NO.	CAT. NO.	UPC NO.	CAT. NO.	UPC NO.	CAT. NO.	UPC NO.	CAT. NO.	UPC NO.	CAT. NO.	UPC NO.
Die Head, NPT	00061	91094	00062	91095	00063	91096	00064	91097	00065	91098	00066	91099
Dies, NPT	00029	91100	00030	91101	00031R	91102	00023	91103	00024	91104	00028R	91105
Dies, NPT Stainless	00225	91106	00226R	91107	00227R	91108	00053	91109	00054	91110	—	—
Die Head, NPSM	—	—	—	—	00200	91113	—	—	—	—	00203	91114
Dies, NPSM	—	—	—	—	00302R	00302	—	—	—	—	00301R	91117

COLLINS CLASSIC 22A - AUTOMATIC OPENING PIPE DIE HEADS & DIES

	1/2" & 3/4"		1" & 1-1/4"		1-1/2" & 2"		1" & 2"	
DESCRIPTION	CAT. NO.	UPC NO.	CAT. NO.	UPC NO.	CAT. NO.	UPC NO.	CAT. NO.	UPC NO.
Die Head, NPT	00221	91133	00221	91133	00221	91133	00221	91133
Dies, NPT	00027	91123	00023	91103	00024	91104	00028R	91105
Dies, NPSM	00300	91134	00301R	91117	—	—	—	—

COLLINS CLASSIC 22A - UNIQUAD™ PIPE DIE HEADS & DIES CONTINUED

	1/8"		1/4" & 3/8"		1/2" & 3/4"		1" & 1-1/4"		1-1/2" & 2"		1" & 2"	
DESCRIPTION	**CAT. NO.**	**UPC NO.**	**CAT. NO.**	**UPC NO.**	**CAT. NO.**	**UPC NO.**	**CAT. NO.**	**UPC NO.**	**CAT. NO.**	**UPC NO.**	**CAT. NO.**	**UPC NO.**
Die Head	00022	91163	00022	91163	00022	91163	00022	91163	00022	91163	00022	91163
Dies, NPT	00025	91121	00026	91122	00027	91123	00023	91103	00024	91104	00028R	91105
Dies, NPT Stainless	00050	00050	00051	91128	00052	91129	00053	91109	00054	91110	—	—
Dies, NPSM	—	—	—	—	00300	91134	—	—	—	—	00301R	91117

	1/4"		5/16"		3/8"		7/16"		1/2"		9/16"	
DESCRIPTION	**CAT. NO.**	**UPC NO.**	**CAT. NO.**	**UPC NO.**	**CAT. NO.**	**UPC NO.**	**CAT. NO.**	**UPC NO.**	**CAT. NO.**	**UPC NO.**	**CAT. NO.**	**UPC NO.**
Die Head	00222	91120	00222	91120	00222	91120	00222	91120	00222	91120	00222	91120
Dies, UNC	00004	91135	00005	91136	00006	91137	00007	91138	00008	91139	00009	91140
Dies, UNF	—	—	00341	91146	00342	91147	—	—	00344R	91149	00345R	91150

	5/8"		3/4"		7/8"		1"		1-1/8"		1-1/4"	
DESCRIPTION	**CAT. NO.**	**UPC NO.**	**CAT. NO.**	**UPC NO.**	**CAT. NO.**	**UPC NO.**	**CAT. NO.**	**UPC NO.**	**CAT. NO.**	**UPC NO.**	**CAT. NO.**	**UPC NO.**
Die Head	00222	91120	00222	91120	00222	91120	00222	91120	00222	91120	00222	91120
Dies, UNC	00010	91141	00011	91142	00012	91143	00013	91144	00014	91155	00015	91156
Dies, UNF	00346R	91151	00347R	91152	00348R	91153	00349R	91154	—	—	00351R	91165

	1-3/8"		1-1/2"		1-5/8"		1-3/4"		1-7/8"		2"	
DESCRIPTION	**CAT. NO.**	**UPC NO.**	**CAT. NO.**	**UPC NO.**	**CAT. NO.**	**UPC NO.**	**CAT. NO.**	**UPC NO.**	**CAT. NO.**	**UPC NO.**	**CAT. NO.**	**UPC NO.**
Die Head	00222	91120	00222	91120	00222	91120	00222	91120	00222	91120	00222	91120
Dies, UNC	00016	91157	00017	91158	00018	91159	00019R	91160	00020R	91161	00021R	91162
Dies, UNF	00352	91166	—	—	—	—	—	—	—	—	—	—

	2-1/4"	
DESCRIPTION	**CAT. NO.**	**UPC NO.**
Die Head	00222	91120
Dies, UNC	00222	91120
Dies, UNF	—	—

GREENLEE®
A Textron Company

RHINO™, 4SE, 2SE, & 1SE

		1/4"		3/8"		1/2"		3/4"		1"	
DESCRIPTION	**USE WITH**	**CAT. NO.**	**UPC NO.**	**CAT. NO.**	**UPC NO.**	**CAT. NO.**	**UPC NO.**	**CAT. NO.**	**UPC NO.**	**CAT. NO.**	**UPC NO.**
Die Head, NPT, Manual	2SE	00121	00012	00121	00012	—	—	—	—	—	—
Dies, NPT, Alloy	1SE	89100	89100	89100	89100	89120	91173	89120	91173	89121	91174
Die Head, NPT	1SE	—	—	—	—	52091	91172	52091	91172	52091	91172
Die Head, NPT	2SE, 4SE, RHINO™	—	—	—	—	52500	91175	52500	91175	52500	91175
Dies, NPT, Alloy	2SE, 4SE, RHINO™	—	—	—	—	89101	91176	89101	91176	89102	91177
Die Head, NPT	4SE & RHINO™	—	—	—	—	—	—	—	—	—	—
Dies, NPT, Alloy	4SE & RHINO™	—	—	—	—	—	—	—	—	—	—
Die Head, NPSM, Manual	2SE, 4SE, RHINO™	—	—	—	—	—	—	—	—	—	—
Dies, NPSM, Alloy	2SE, 4SE, RHINO™	—	—	—	—	89148	91031	89148	91031	89149	91032

		1-1/4"		1-1/2"		2"		2-1/2"		3"	
DESCRIPTION	**USE WITH**	**CAT. NO.**	**UPC NO.**	**CAT. NO.**	**UPC NO.**	**CAT. NO.**	**UPC NO.**	**CAT. NO.**	**UPC NO.**	**CAT. NO.**	**UPC NO.**
Die Head, NPT, Manual	2SE	—	—	—	—	—	—	—	—	—	—
Dies, NPT, Alloy	1SE	—	—	—	—	—	—	—	—	—	—
Die Head, NPT	1SE	52091	91172	52091	91172	52091	91172	—	—	—	—
Die Head, NPT	2SE, 4SE, RHINO™	52500	91175	52500	91175	52500	91175	—	—	—	—
Dies, NPT, Alloy	2SE, 4SE, RHINO™	89102	91177	89102	91177	89102	91177	—	—	—	—
Die Head, NPT	4SE & RHINO™	—	—	—	—	—	—	64401	64401	64401	64401
Dies, NPT, Alloy	4SE & RHINO™	—	—	—	—	—	—	59912	91179	59912	91179
Die Head, NPSM, Manual	2SE, 4SE, RHINO™	—	—	20172R	20172	20172R	20172	20172R	20172	20172R	20172
Dies, NPSM, Alloy	2SE, 4SE, RHINO™	89149	91032	89150	91033	89150	91033	89151	91034	89151	91034

		4"	
DESCRIPTION	**USE WITH**	**CAT. NO.**	**UPC NO.**
Die Head, NPT, Manual	2SE	—	—
Dies, NPT, Alloy	1SE	—	—
Die Head, NPT	1SE	—	—
Die Head, NPT	2SE, 4SE, RHINO™	—	—
Dies, NPT, Alloy	2SE, 4SE, RHINO™	—	—
Die Head, NPT	4SE & RHINO™	64401	64401
Dies, NPT, Alloy	4SE & RHINO™	59912	91179
Die Head, NPSM, Manual	2SE, 4SE, RHINO™	—	—
Dies, NPSM, Alloy	2SE, 4SE, RHINO™	—	—

RIDGID®* STYLE UNIVERSAL

"R" SERIES DIES – ROPOWER 50R

	GREENLEE		RIDGID
DESCRIPTION	**CAT. NO.**	**UPC NO.**	**PART NO.**
1/2" – 3/4" Alloy Dies NPT	89162	89162	47745
1" – 2" Alloy Dies NPT	89163	89163	47750
1/4" – 3/8" H.S. Steel Dies NPT	56383	91180	47760
1/2" – 3/4" H.S. Steel Dies NPT	00125	00125	47765
1" – 2" H.S. Steel Dies NPT	00126	00126	47770
1/4" – 3/8" Stainless Steel Dies NPT	00217	00217	47780
1/2" – 3/4" Stainless Steel Dies NPT	00218	00218	47785
1" – 2" Stainless Steel Dies NPT	00219	00219	47790

UNIVERSAL "R" SERIES DIE HEAD DIES

WILL ACCEPT "R" STYLE DIES FROM 1/8" – 2" NPT FOR THE ROPOWER 50R

	GREENLEE	
DESCRIPTION	**CAT. NO.**	**UPC NO.**
Die Head 50R Manual 1/4" – 3/8"	00121	00012
Die Head 50R Automatic 1/2" – 2"	56265	56025

RIDGID® is a registered trademark of Ridgid Tool Co.

2SE & 50R FOR BOLT THREADS - MANUAL OPENING DIE HEAD & DIES

	1/2"		5/8"		3/4"		7/8"		1"		1-1/8" – 1-1/4"	
DESCRIPTION	**CAT. NO.**	**UPC NO.**	**CAT. NO.**	**UPC NO.**	**CAT. NO.**	**UPC NO.**	**CAT. NO.**	**UPC NO.**	**CAT. NO.**	**UPC NO.**	**CAT. NO.**	**UPC NO.**
Die Head	20160	20160	20160	20160	20160	20160	20160	20160	20160	20160	63090	20162
Dies, UNC Alloy	89016	89016	89017	89017	89018	89018	89019	89019	89020	89020	89197	89197

	1-3/8" - 1-1/2"	
DESCRIPTION	**CAT. NO.**	**UPC NO.**
Die Head	63090	20162
Dies, UNC Alloy	—	—

44A THREAD-O-MATIC™ & SNAP-O-MATIC™ PIPE DIE HEADS & DIES

	1/2" – 3/4"		1" – 1-1/4"		1-1/2" – 2"		1" – 2"		2-1/2" – 3"		3-1/2" – 4"	
DESCRIPTION	**CAT. NO.**	**UPC NO.**	**CAT. NO.**	**UPC NO.**	**CAT. NO.**	**UPC NO.**	**CAT. NO.**	**UPC NO.**	**CAT. NO.**	**UPC NO.**	**CAT. NO.**	**UPC NO.**
Die Head, NPT	00063	91096	00064	91097	00065	91098	00066	91099	00055	91183	00057	91184
Dies, NPT	00031R	91102	00023	91103	00024	91104	00028R	91105	00041	91185	00042R	91186
Dies, NPT Stainless	00227R	91108	00053	91109	00054	91110	—	—	00047R	91187	00048	91188
Die Head, NPSM	00200	91113	—	—	—	—	00203	91114	—	—	—	—
Dies, NPSM	00302R	00302	—	—	—	—	00301R	91117	—	—	00306	91192

44A - UNIQUAD™ & SNAP-O-MATIC™ BOLT DIE HEADS & DIES

	5/8"		3/4"		7/8"		1"		1-1/8"		1-1/4"	
DESCRIPTION	**CAT. NO.**	**UPC NO.**	**CAT. NO.**	**UPC NO.**	**CAT. NO.**	**UPC NO.**	**CAT. NO.**	**UPC NO.**	**CAT. NO.**	**UPC NO.**	**CAT. NO.**	**UPC NO.**
Die Head	00222	91120	00222	91120	00222	91120	00222	91120	00222	91120	00222	91120
Dies, UNC	00010	91141	00011	91142	00012	91143	00013	91144	00014	91155	00015	91156
Dies, UNF	00346R	91151	00347R	91152	00348R	91153	00349R	91154	—	—	00351R	91165

	1-3/8"		1-1/2"		1-5/8"		1-3/4"		1-7/8"		2"	
DESCRIPTION	**CAT. NO.**	**UPC NO.**	**CAT. NO.**	**UPC NO.**	**CAT. NO.**	**UPC NO.**	**CAT. NO.**	**UPC NO.**	**CAT. NO.**	**UPC NO.**	**CAT. NO.**	**UPC NO.**
Die Head	00222	91120	00222	91120	00222	91120	00222	91120	00222	91120	00222	91120
Dies, UNC	00016	91157	00017	91158	00018	91159	00019R	91160	00020R	91161	00021R	91162
Dies, UNF	00352	91166	—	—	—	—	—	—	—	—	—	—

	2-1/4"		2-1/2"		2-3/4"		3"	
DESCRIPTION	**CAT. NO.**	**UPC NO.**	**CAT. NO.**	**UPC NO.**	**CAT. NO.**	**UPC NO.**	**CAT. NO.**	**UPC NO.**
Die Head	00222	91120	—	—	—	—	—	—
Dies, UNC	00022	91163	—	—	—	—	—	—
Dies, UNC RH Only	—	—	00330	91196	00331	91197	00332R	91198

GREENLEE®
A Textron Company

66A THREAD-O-MATIC™ & SNAP-O-MATIC™ PIPE DIE HEADS & DIES

	1" – 1-1/4"		1-1/2" – 2"		1" – 2"		2-1/2" – 3"		3-1/2" – 4"		5"	
DESCRIPTION	CAT. NO.	UPC NO.	CAT. NO.	UPC NO.	CAT. NO.	UPC NO.	CAT. NO.	UPC NO.	CAT. NO.	UPC NO.	CAT. NO.	UPC NO.
Die Head, NPT	00064	91097	00065	91098	00066	91099	00056	91199	00058	91200	00060	91202
Dies, NPT	00023	91103	00024	91104	00028R	91105	00041	91185	00042R	91186	00043	91203
Dies, NPT Stainless	00053	91109	00054	91110	—	—	00047R	91187	00048	91188	00049	91204
Die Head, NPSM	—	—	—	—	00203	91114	—	—	—	—	—	—
Dies, NPSM	—	—	—	—	00301R	91117	—	—	00306	91192	00307	91210

	6"	
DESCRIPTION	CAT. NO.	UPC NO.
Die Head, NPT	00060	91202
Dies, NPT	00043	91203
Dies, NPT Stainless	00049	91204
Die Head, NPSM	—	—
Dies, NPSM	00307	91210

66A - UNIQUAD™ PIPE DIE HEADS & DIES

	1" – 1-1/4"		1-1/2" – 2"		1" – 2"	
DESCRIPTION	CAT. NO.	UPC NO.	CAT. NO.	UPC NO.	CAT. NO.	UPC NO.
Die Head	00222	91120	00222	91120	00222	91120
Dies, NPT	00023	91103	00024	91104	00028R	91105
Dies, NPT Stainless	00053	91109	00054	91110	—	—
Dies, NPSM	—	—	—	—	00301R	91117

66A - AUTOMATIC OPENING PIPE DIE HEADS & DIES

	1" – 1-1/4"		1-1/2" – 2"		1" – 2"	
DESCRIPTION	CAT. NO.	UPC NO.	CAT. NO.	UPC NO.	CAT. NO.	UPC NO.
Die Head	00221	91133	00221	91133	00221	91133
Dies, NPT	00023	91103	00024	91104	00028R	91105
Dies, NPSM	—	—	—	—	00301R	91117

66A - DIE HEADS & DIES UNIQUAD™ BOLT DIE HEADS & DIES

	1-1/4"		1-3/8"		1-1/2"		1-5/8"		1-3/4"		1-7/8"	
DESCRIPTION	CAT. NO.	UPC NO.	CAT. NO.	UPC NO.	CAT. NO.	UPC NO.	CAT. NO.	UPC NO.	CAT. NO.	UPC NO.	CAT. NO.	UPC NO.
Die Head	00222	91120	00222	91120	00222	91120	00222	91120	00222	91120	00222	91120
Dies, UNC	00015	91156	00016	91157	00017	91158	00018	91159	00019R	91160	00020R	91161
Dies, UNF	00351R	91165	00352	91166	—	—	—	—	—	—	—	—

	2"		2-1/4"	
DESCRIPTION	CAT. NO.	UPC NO.	CAT. NO.	UPC NO.
Die Head	00222	91120	00222	91120
Dies, UNC	00021R	91162	00022	91163
Dies, UNF	—	—	—	—

SNAP-O-MATIC™ BOLT DIE HEADS & DIES

	2-1/2"		2-3/4"		3"		3-1/2"		3-3/4"	
DESCRIPTION	CAT. NO.	UPC NO.	CAT. NO.	UPC NO.	CAT. NO.	UPC NO.	CAT. NO.	UPC NO.	CAT. NO.	UPC NO.
DIES, UNC RIGHT HAND ONLY	00330	91196	00331	91197	00332R	91198	00334	91213	00335R	91214

GROOVING & BEVELING DIE HEADS & TOOLS

		HEAD		CENTERING DIES		GROOVING & CUTTING BIT		CUTTING ONLY	
SIZE	USE WITH	CAT. NO.	UPC NO.	CAT. NO.	UPC NO.	CAT. NO.	UPC NO.	CAT. NO.	UPC NO.
3/4" – 2"	22A, 33A, 44A	00471R	91216	00489	91223	00477R (SCH. 40 & 80)	91228	00478R (SCH. 40 & 80)	91230
1" – 2"	All Units	00470R	91217	00488R	91224	00477R (SCH. 40 & 80)	91228	00478R (SCH. 40 & 80)	91230
2-1/2" – 3"	33A & 44A	00472R	91218	00490	91225	00482R (SCH. 40 & 80)	91229	00483R (SCH. 40, 80, & 160)	91231
2-1/2" – 3"	66A	00475R	91219	00490	91225	00482R (SCH. 40 & 80)	91229	00483R (SCH. 40, 80, & 160)	91231
3-1/2" – 4"	33A & 44A	00473R	91220	—	—	00482R (SCH. 40 & 80)	91229	00483R (SCH. 40, 80, & 160)	91231
3-1/2" – 4"	66A	00476R	91221	—	—	00482R (SCH. 40 & 80)	91229	00483R (SCH. 40, 80, & 160)	91231
5" – 6"	66A	00474R	91222	—	—	00482R (SCH. 40 & 80)	91229	00483R (SCH. 40, 80, & 160)	91231
2-1/2" – 3"	RHINO™	00574R	00574	00490	91225	00482R (SCH. 40 & 80)	91229	00483R (SCH. 40, 80, & 160)	91231
3-1/2" – 4"	RHINO™	00575	00575	—	—	00482R (SCH. 40 & 80)	91229	00483R (SCH. 40, 80, & 160)	91231

		DOUBLE BEVEL 45		DOUBLE BEVEL 37-1/2"		SARAN TOOLS	
SIZE	USE WITH	CAT. NO.	UPC NO.	CAT. NO.	UPC NO.	CAT. NO.	UPC NO.
3/4" – 2"	22A, 33A, 44A	00480R (SCH. 40 & 80)	91232	00479R (SCH. 40 & 80)	91234	—	—
1" – 2"	All Units	00480R (SCH. 40 & 80)	91232	00479R (SCH. 40 & 80)	91234	—	—
2-1/2" – 3"	33A & 44A	00486 (SCH. 40)	91233	00484R (SCH. 40)	91235	00487R (SCH. 40)	91238
2-1/2" – 3"	66A	00486 (SCH. 40)	91233	00484R (SCH. 40)	91235	00487R (SCH. 40)	91238
3-1/2" – 4"	33A & 44A	00486 (SCH. 40)	91233	00484R (SCH. 40)	91235	00487R (SCH. 40)	91238
3-1/2" – 4"	66A	00486 (SCH. 40)	91233	00484R (SCH. 40)	91235	00487R (SCH. 40)	91238
5" – 6"	66A	00486 (SCH. 40)	91233	00484R (SCH. 40)	91235	00487R (SCH. 40)	91238
2-1/2" – 3"	RHINO™	00486 (SCH. 40)	91233	00484R (SCH. 40)	91235	00487R (SCH. 40)	91238
3-1/2" – 4"	RHINO™	00486 (SCH. 40)	91233	00484R (SCH. 40)	91235	00487R (SCH. 40)	91238

GREENLEE®
A Textron Company

GREENLEE MECHANICAL SOLUTIONS
SOLDERING, BRAZING & PLASTIC WELDING







35415R

ROFIRE HAND TORCH

- **High-Performance Piezo Ignition** - Reliable lighting up to 30,000 ignitions
- **Fiber-Reinforced Body** - High impact rated
- **Fine Regulating Valve** - Allows for precise flame adjustment
- **On/Off Trigger** - Lights instantly; shuts off if dropped or released
- **Trigger Guard**
- **Locking Button** - Provides continuous flame for hands-free use
- **Longer Skirt** - Added stability on bottle, reducing thread damage

CAT. NO.	UPC NO.	DESCRIPTION
35415R	35415	ROFIRE Hand Torch with Swirl-Flame Burner Tip



35431R

SUPER FIRE 3

- **High-Performance Piezo Ignition** - Reliable lighting up to 30,000 ignitions
- **Elaborately Manufactured Brass / Stainless Steel Design** - Long service life
- **Fast "Twist 'N' Load System"** - Exchange of the nozzle with one movement (5 different nozzles available)
- **Fine Regulating Valve** - Precise flame adjustment
- **Ergonomically Designed Handle Made of High-Quality Aluminum** - Robust and optimum handling
- **Nozzle with Swirl Flame** - Rapid heat-up, less use
- **Dual Safety** - Only ignites if torch has been securely locked
- **Locking Button** - Continued use

CAT. NO.	UPC NO.	DESCRIPTION
35431R	35431	SUPERFIRE 3 Torch

GREENLEE®
A Textron Company


35012 35014

ROFIRE SWIVEL TORCHES

- The latest in torches, these heads swivel 360º for hard-to-reach areas

CAT. NO.	UPC NO.	DESCRIPTION
35014	03664	ROFIRE Swivel Pro Cyclone Torch
35012	02640	ROFIRE Swivel Pro Double Barrel Torch


35459

SOLDERING AND BRAZING TORCHES

- For shrinking up to Ø 300 mm and for heating; powerful, wind-stable soft flame

CAT. NO.	UPC NO.	DESCRIPTION
35455	35455	Pin-Point Burner
35456	35456	Standard Burner
35457	35457	Swirl-Flame Burner
35458	35458	Hot-Air Burner
35459	35459	Soft-Flame Burner


P20023

SWEATBOX™ II

Handy Kit that Includes the Following Tools Needed to Sweat Copper

- SUPER FIRE 3 Torch (35431R)
- 35 PRO Tube Cutter (70027)
- MINI MAX Tube Cutter (70015)
- Carrying Case

CAT. NO.	UPC NO.	DESCRIPTION
P20023	20023	SWEATBOX™ II


31043R

FLAME REFLECTOR

- Protects surrounding materials or walls when soldering pipes
- **Mounts onto Most Burner Tips** - Nothing separate to hold or attach to pipe
- **Evenly Heats Pipe** - Saves energy and time
- Durable stainless steel
- 2-1/2" wide

CAT. NO.	UPC NO.	DESCRIPTION
31043R	31043	Flame Reflector (Mounting Dia. 5/8" - 7/8")



50012R 50010R

MAP-PRO® AND PROPANE GAS

- Extremely high flame temperature, utmost burning performance
- Guaranteed constant top burner performance
- Poses no health risks (contains no BUTADIENE)
- Easy to use
- Increased user safety
- Longer periods of use

CAT. NO.	UPC NO.	DESCRIPTION
50012R	50012	Map-Pro Gas Replacement
50010R	50010	Propane Gas Replacement

MAP-PRO® is a registered trademark of Worthington Industries Inc.



36701

ROTHERM 2000

- **High Performance in Short Amount of Time** - Fast return on investment with no purchasing or handling of gas cylinders
- **Thermal Overload Protection** - Shuts off automatically
- **Flexible, 13 Foot Long Cables** - Provides large working radius
- **Large, Stainless Steel Cooling Ribs on Both Shanks of the Tongs** - Prevents overheating of the handle
- **Solder without Open Flame** - No risk of fire when near flammable wall or floor, or plastic parts

CAT. NO.	UPC NO.	DESCRIPTION
36701	36701	ROTHERM 2000 Soft-Soldering Unit
36711	36711	ROTHERM Flat Electrode with Holders (Pair)
36710	36710	ROTHERM Rod Electrode with Holders (Pair)
36721	36721	ROTHERM Flat Electrodes (Pair)
36720	36720	ROTHERM Rod Electrodes (Pair)
45225R	00029	ROTHERM Soldering Paste

GREENLEE®
A Textron Company

ROWELD™ P 63 S-6



R11245R

- **Efficient Heat Protection** - Isolator prevents heat transfer to the case
- **3 Holes for Mounting Heating Spigots and Heating Sockets** - Increased flexibility and combination options for every day use
- **Control Indicator Lights** - All important information at a glance
- **Temperature Selector Switch** - Process safety according to DVS
- **Automatic Overheat Protection** - Safe operation
- **Integrated Floor Stand** - Retractable floor stand always available
- **Narrow Profile Heating Plate** - Simple to use in confined spaces
- **Anti-Stick Coating** - Long service life

CAT. NO.	UPC NO.	DESCRIPTION
R11245R	11245	ROWELD™ P63 S-6 20-63MM Set 115V

ROWELD™ P 160



R54001R

- Minimum drag force
- 40% Higher stability with simultaneously optimized force distribution
- Removable heating plates for versatility
- Precise pressure adjustment
- Time saving set up
- Tool-less insert change
- Compact design for easy transport
- Electrically adjustable heating element
- Handy welding parameter template
- Non-slip reducer clamp inserts for safety
- Treated with DURAMANT coating

CAT. NO.	UPC NO.	DESCRIPTION
R54001R	54001	ROWELD™ P 160 Saniline Set

ROWELD™ P 160 B, P 250 B, & P 355 B



R55838R

- Three simultaneously usable welding combinations
- Process reliability with the temperature control according to DVS, CEN, and ISO standards
- High-quality, anti-stick Teflon® coating for long service life
- Manufactured according to DVS standards
- Electronic temperature control and monitoring, as well as prevention against unintentional temperature adjustment
- Saves time and money with quick-exchange system for heating plates
- Optimum temperature distribution over the entire working area

CAT. NO.	UPC NO.	DESCRIPTION
R55838R	55838	ROWELD™ P 160 B Basic Professional Set
R11127R	11127	ROWELD™ P 250 B Basic Professional Set
R11106R	11106	ROWELD™ P 355 B Basic Professional Set

Teflon® is a registered trademark of the Chemours Company

NOTES

GREENLEE®
A Textron Company

GREENLEE MECHANICAL SOLUTIONS
PRESSURE & ELECTRICAL TESTING



RP50-S TEST PUMP

Warp-Resistant and Lockable Lever
Ergonomic handle serves as carrying grip tool

Testing Hose with Steel Mesh
Precise measurement

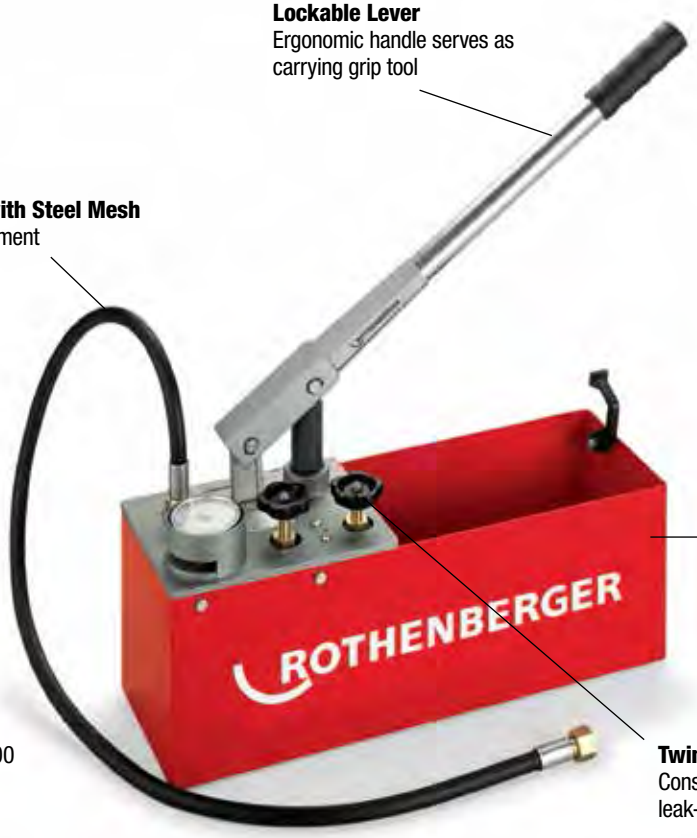

60200

Weather and Cold-Resistant Container
5 year rust-free guarantee – DURAMANT coated

Twin Valve System in Monoblock Design
Constant pressure levels and reduction of leak-prone connections

Double Valve System enables self-testing of the pump, as well as a precise fine adjustment of the pressure



CAT. NO.	UPC NO.	DESCRIPTION
60200	60200	RP50-S Pressure Test Pump 60 Bar/860 PSI
60201	60201	RP50-S Repair Kit
60250R	60250	TP25 Test Pump 25 Bar/363 PSI
60251	60251	TP25 Repair Kit

GREENLEE®
A Textron Company



GT-95



GT-65

ELECTRICAL TESTERS

- AC/DC voltage and polarity measurement
- Over voltage warning gives user visual notification that voltage levels have exceeded 1000V AC/ 380V DC
- Auto-hold automatically activates when tester is removed from voltage reading
- Continuity test and single probe detection of live conductors for added flexibility
- Safe, non-contact voltage detection
- Visual and audible continuity
- Lifetime limited warranty
- Accessories included - (2) 1.5V AAA batteries and test leads

CAT. NO.	UPC NO.	DESCRIPTION
GT-95	09027	Voltage Tester, LCD & GFCI
GT-65	09025	Voltage Tester, LCD & GFCI
TSG-3	12034	Sure-Grip Test Leads



CMT-80

AUTOMATIC ELECTRICAL TESTER

- Hassle-free, automatic measurement of amperage, voltage, and resistance
- Low impedance eliminates stray or "ghost" voltage readings
- Compact design for measuring in tight spaces
- Resistance measurement
- Audible continuity test
- Diode test
- Data hold to capture important readings
- Auto off for longer battery life
- Accessories included - (1) 9V battery, test leads, and carrying case
- Lifetime limited warranty

CAT. NO.	UPC NO.	DESCRIPTION
CMT-80	07735	Automatic Electrical Tester
TC-5	07588	Carrying Case
11372	11372	Test Leads

ADJUSTABLE NON-CONTACT VOLTAGE DETECTOR



GT-16

- Adjustable to safely detect power and low voltage
- Safely detects AC voltage without touching the bare conductor
- Adjustable for use on power wiring plus lighting, thermostats, and other low voltage circuits
- Use to detect voltage in outlets, lighting fixtures, wires, and cables
- Finds breaks in wires
- Identifies hot and neutral conductors
- Low battery indication
- Lifetime limited warranty

CAT. NO.	UPC NO.	DESCRIPTION
GT-16	12727	Adjustable Non-Contact Voltage Detector

NON-CONTACT VOLTAGE DETECTOR



GT-12A

- Single button operation
- CAT IV 1000 V rated for maximum safety
- Patented automatic self-test runs every 2 seconds for accurate results every time
- Automatically shuts off after 5 minutes of inactivity to extend battery life
- Bright LEDs flash and audible alarm sounds if AC voltage is present
- Silent mode for use in quite areas
- Safe, non-contact voltage detection
- Lifetime limited warranty
- Designed and assembled in USA

CAT. NO.	UPC NO.	DESCRIPTION
GT-12A	00890	Non-Contact Voltage Detector

SELF TESTING NON-CONTACT VOLTAGE DETECTOR



TR-12A

- Detects voltage in tamper-resistant and conventional 15A and 20A, 120V outlets
- Patented automatic self-test verifies the integrity of the unit
- Bright LEDs flash and audible alarm sounds if voltage is present
- Silent-mode feature for use in quiet areas
- Safe, non-contact voltage detection
- Use to detect voltage in outlets, lighting fixtures, circuit breakers, wires, and cables or to find a break in a wire
- Automatically turns off after 5 minutes of non-use to conserve battery life
- Low battery indicator
- Designed and assembled in USA
- Lifetime limited warranty

CAT. NO.	UPC NO.	DESCRIPTION
TR-12A	02733	Self Testing Tamper Resistant Non-Contact Voltage Detector

GREENLEE®
A Textron Company



DM-860A

ESM™ INDUSTRIAL 500,000-COUNT DIGITAL MULTIMETER

- AC+DC True RMS, 50,000-count display for greater accuracy
- 500,000 count available in DC voltage mode
- VFD (variable frequency drive) voltage and frequency functions for accurate readings on noisy drive waveforms
- Beep-Jack™ audible and visual input alert helps avoid blown fuses or damage to meter
- 41-segment analog bar graph makes it easy to view quick changes
- Record max, min, avg, max-min and data hold
- Crest capture (peak hold) max and min readings
- Relative offset display mode makes monitoring relative measurement changes simple
- Performs resistance, conductance, frequency, duty cycle, temperature and capacitance measurements, plus diode and continuity tests
- Dual temperature measurement up to 1832ºF/1000ºC using type K thermocouples
- Bright back-lit display is easy to read under any light condition
- Intelligent auto power off conserves battery life but will not turn meter off during measurements
- Wide AC bandwidth – To 100 kHz for voltage and 20 kHz for current
- USB Interface using optional DMSC-9U cable and software allows connection to a PC for extended measurement capability
- Accessories included - (1) 9V battery, bead temperature probe (400°F/ 204°C max.), test leads, protective boot and carrying case
- Lifetime limited warranty

CAT. NO.	UPC NO.	DESCRIPTION
DM-860A	12938	Industrial 500,000-Count Digital Multimeter
TC-20	07535	Carrying Case
TSG-3	12034	Sure-Grip Test Leads
TPB	07592	Bead Temperature Probe



ESM™ SERIES DIGITAL MULTIMETERS



DM-810A

- True RMS for no-compromise
- Measures voltage, current, resistance, capacitance, and frequency
- Tests continuity and diodes
- Backlit LCD with dual 10,000 count displays
- Beep-Jack™ warns when test leads are incorrectly inserted in current measurement terminals
- Automatic and manual range selection
- Relative offset mode to see changes in measurements
- Data hold
- Use optional USB interface DMSC-9U for direct-to-PC logging
- Lifetime limited warranty

CAT. NO.	UPC NO.	DESCRIPTION
DM-810A	08743	ESM™ Series Digital Multimeter
TC-20	07535	Carrying Case (Included)
TSG-3	12034	Sure-Grip Test Leads
TPB	07592	Bead Temperature Probe

DIGITAL MULTIMETER



DM-65

- Measures AC/DC voltage, AC/DC current, resistance, temperature, frequency, duty cycle and capacitance
- Diode and audible continuity tests
- Relative offset mode to see changes in measurements
- Data hold
- Backlit; 6,000 count LCD with bar graph
- Lifetime limited warranty

CAT. NO.	UPC NO.	DESCRIPTION
DM-65	00339	CATIII, 1000V; CATIV 600V Auto-Ranging Digital Multimeter
TSG-3	12034	Sure-Grip Test Leads

GREENLEE®
A Textron Company

PDMM-20 POCKET MULTIMETER



PDMM-20

- Auto-select mode for hassle-free use
- Low impedance eliminates stray or "ghost" voltage readings
- AC/DC voltage measurement
- Hassle-free, automatic measurement of voltage and resistance
- Auto ranging for quick, convenient measurements
- Non-contact voltage detection for identifying live lines without contacting conductors
- Intelligent auto-off for longer battery life
- Low battery indicator
- Resistance measurement
- Audible continuity test
- Frequency measurement in voltage mode
- Capacitance measurement
- 6-count LCD for high resolution
- Accessories included - (1) 3 V battery (CR2032) and carrying case
- Lifetime limited warranty

CAT. NO.	UPC NO.	DESCRIPTION
PDMM-20	11689	Pocket Multimeter

1000A INDUSTRIAL CLAMP METER



CMI-1000

- Measures AC+DC current and DC microamps
- AC and AC+DC voltage measurements with digital low pass filter for accurate readings on variable frequency drives
- Also measures DC voltage, resistance, capacitance, temperature and frequency
- Tests continuity and diodes
- Phase sequence & motor rotation test
- Peak-RMS measures motor in rush current
- Flashlight inside clamp jaw for easier work in dark locations
- Backlight & relative mode for added versatility
- AmpTip™ increases accuracy on small wires and low current
- Two voltage detection modes – non-contact or using a single test lead
- Data hold
- Recording of maximum, minimum and average readings
- Crest (peak hold) feature captures current or voltage peaks as short as 5 milliseconds
- Lifetime limited warranty

CAT. NO.	UPC NO.	DESCRIPTION
CMI-1000	02187	1000A Industrial Clamp Meter
02714	02714	Test Leads
TC-30	07536	Carrying Case



HVAC TRUE RMS CLAMP METER



CMH-600



CMH-1000

- Measures AC+DC current and DC microamps
- AC voltage measurement with digital low pass filter for accurate readings on variable frequency drives
- Also measures DC voltage, resistance, capacitance, temperature, and frequency
- Tests continuity and diodes
- Phase sequence & motor rotation test
- Peak-RMS measures motor in rush current
- Backlight & relative mode for added versatility
- AmpTip™ increases accuracy on small wires and low current
- Two voltage detection modes – non-contact or using a single test lead
- Recording of maximum, minimum, and average readings
- Lifetime limited warranty
- Flashlight inside clamp jaw for easier work in dark locations
- Crest (peak hold) feature captures current or voltage peaks as short as 5 milliseconds

CAT. NO.	UPC NO.	DESCRIPTION
CMH-1000	02209	1000A HVAC True RMS Clamp Meter (AC Clamp-On)
CMH-600	02231	600A HVAC True RMS Clamp Meter (AC Clamp-On)
02714	02714	Test Leads
TC-30	07536	Carrying Case (CMH-1000)
TC-10	07534	Carrying Case (CMH-600)

AC CLAMP-ON METER



CM-410

- Measures 600 volts AC and DC, and 400 Amps AC
- Data hold to capture important readings
- Audible continuity test
- Auto power off for longer battery life
- Accessories included - (2) 1.5V AAA batteries, test leads and carrying case
- Lifetime limited warranty

CAT. NO.	UPC NO.	DESCRIPTION
CM-410	73420	AC Clamp-On Meter
TC-5	07588	Carrying Case

GREENLEE®
A Textron Company

CS-8000 CIRCUIT SEEKER™ CIRCUIT TRACER



CS-8000

- Patented non-directional sensing technology
- Superior sensitivity for accurate tracing & locating
- Ergonomic receiver with full-color LCD
- Graphics and audible provide quick and easy tracing feedback
- Traces concealed wiring, locates junction boxes, and finds breakers for live or open circuits
- Locates and identifies blown fuses
- Finds shorts and breaks in conductors
- Can be used on GFCI protected circuits
- Supports transmitter-to-receiver distances up to 4 miles for closed circuit tracing
- Lifetime limited warranty

CAT. NO.	UPC NO.	DESCRIPTION
CS-8000	12126	Circuit Seeker (Kit)
12849	12849	Transmitter
12850	12850	Receiver
10057	10057	Alligator Clips (2)
10054	10054	AC Blade
12852	12852	AC Plug Adapter
12853	12853	Extension Leads (2)
12851	12851	Carrying Case

TG-1000


TG-1000

- Safe, non-contact temperature measurement
- Display temperatures in either °F or °C
- Adjustable emissivity for optimum temperature reading accuracy on a wide range of materials and surfaces
- Min, max, difference, and average temperature functions
- Backlit display for easy readings in any environment
- Laser spot indicator showing approximate center of target measurement area

CAT. NO.	UPC NO.	DESCRIPTION
TG-1000	00103	Infrared Thermometer

TG-2000


TG-2000

- Wider temperature range
- Higher distance-to-spot (D:S) ratio for measuring
- Smaller targets or at greater distances
- Dual lasers indicate approximate diameter of target measurement area

CAT. NO.	UPC NO.	DESCRIPTION
TG-2000	00104	Dual Laser Infrared Thermometer

GREENLEE®
A Textron Company

GREENLEE MECHANICAL SOLUTIONS
FREEZING & PIPE REPAIR TOOL



ROFROST™ CO_2 SET

For Quick, Easy, and CFC-Free Freezing using Carbon Dioxide of:

Copper Pipes	Dia. 1/2" – 2-1/8"
Steel	Dia. 1/8" – 2"

Plastic Pipes as Well as Multilayer Composite Tube



65030

Carbon Dioxide Powered
Offers high refrigeration power up to -79°C/-110°F for extremely short freezing times

Fast and Safe Application
No emptying of pipes required

Freezing Heads
Offer constant block clamping of pipe diameter: No breaking of freezing sleeve

Plastic Freezer Heads
Efficient freezing in minimal space

CAT. NO.	UPC NO.	DESCRIPTION
65035	65035	ROFROST™ CO_2 Freezing Head (Copper O.D. 1/2" & Steel Dia. 1/8")
65036	65036	ROFROST™ CO_2 Freezing Head (Steel Dia. 1/4")
65037	65037	ROFROST™ CO_2 Freezing Head (Copper O.D. 5/8" & Steel Dia. 3/8")
65038	65038	ROFROST™ CO_2 Freezing Head (Copper O.D. 3/4" - 7/8" & Steel Dia. 1/2")
65039	65039	ROFROST™ CO_2 Freezing Head (Copper O.D. 1-1/8" & Steel Dia. 3/4")

CAT. NO.	UPC NO.	DESCRIPTION
65040	65040	ROFROST™ CO_2 Freezing Head (Copper O.D. 1-3/8" & Steel Dia. 1")
65041	65041	ROFROST™ CO_2 Freezing Head (Copper O.D. 1-5/8" & Steel Dia. 1-1/4")
65042	65042	ROFROST™ CO_2 Freezing Head (Steel Dia. 1-1/2")
65043	65043	ROFROST™ CO_2 Freezing Head (Copper O.D. 2-1/8")
65044	65044	ROFROST™ CO_2 Freezing Head (Steel Dia. 2")



64004

Kit Includes - 1 can quick freeze spray (64001), 2 foam pipe jackets and 4 plastic ties

FREEZE-PAK

- The FREEZE-PAK is the ideal way to make quick repairs without draining or interrupting the water supply - Spray produces a temporary ice plug in plumbing and heating systems and lasts up to 30 minutes
- Produces an ice plug in 10 minutes
- Works on copper, iron, lead, or plastic pipes
- No need to drain system
- Works vertically and horizontally
- **Safe to use** – CFC free
- **Size range** – 1/4" – 1" O.D.

CAT. NO.	UPC NO.	DESCRIPTION
64004	64004	FREEZE-PAK Kit
64002	64002	Foam Pipe Jacket Replacement (2 Pieces)
64001	64001	Quick Freeze Spray Replacement 17.5 OZ. (500 G)

GREENLEE®
A Textron Company

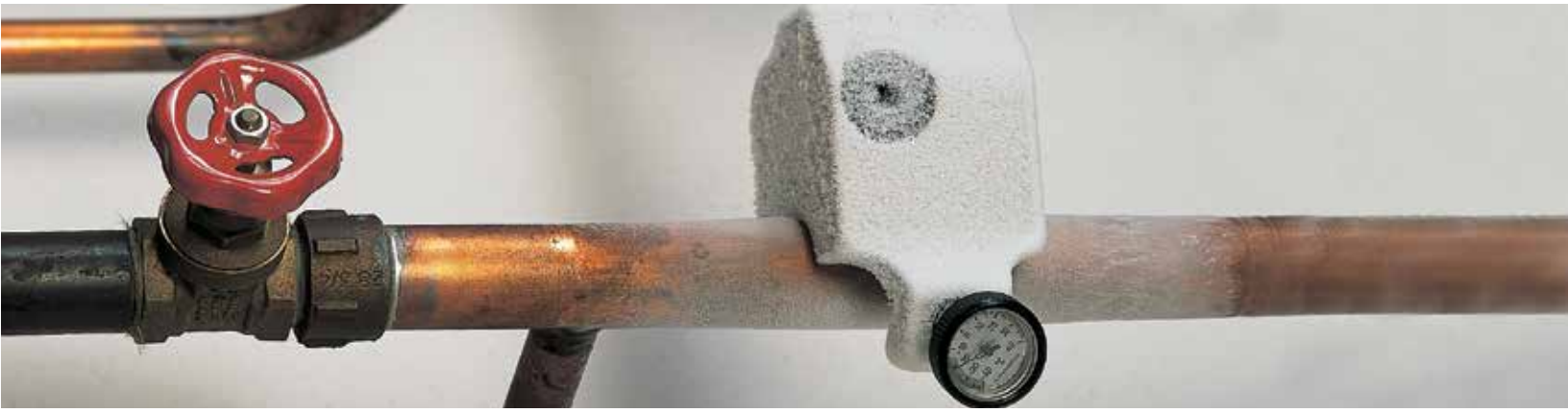



62205



62217 - For ROFROST™ 1-1/4"



62234 - For 2" Turbo

ROFROST™ TURBO 2"

- High-tech pipe freezing system for copper, steel, and plastic composite pipes
- Ideal for maintenance, repair, and expansion work in plumbing and heating installations
- **Portable Use** - Optimal for service industry
- **Plastic Capillary Pipes** - High flexibility and uninterrupted operation
- **6 Standard Adapter Sets** - Covers 15 pipe dimensions

CAT. NO.	UPC NO.	DESCRIPTION
62205	62205	ROFROST™ Turbo 2"
62202	62202	ROFROST™ Turbo 1-1/4"
62231	62231	Reduction Inserts for 2" (Steel Dia. 3/4")
62232	62232	Reduction Inserts for 2" (Copper O.D. 1-1/8")
62233	62233	Reduction Inserts for 2" (Copper O.D. 1-1/4")
62234	62234	Reduction Inserts for 2" (Copper O.D. 1-3/8" & Steel Dia. 1")
62235	62235	Reduction Inserts for 2" (Steel Dia. 1-1/4")
62236	62236	Reduction Inserts for 2" (Steel Dia. 1-1/2")
62237	62237	Reduction Inserts for (Copper O.D. 2-1/8")
62230	62230	2" Expansion Set (Copper O.D. 1/2", 5/8" & 7/8" & Steel Dia. 1/4" & 1/2")
62217	62217	Reduction Inserts for 1-1/4" (Copper O.D. 3/8" & Steel Dia. 1/8")
62211	62211	Reduction Inserts for 1-1/4" (Copper O.D. 1/2")
62219	62219	Reduction Inserts for 1-1/4" (Copper O.D. 5/8")
62224	62224	Reduction Inserts for 1-1/4" (Copper O.D. 3/4")
62214	62214	Reduction Inserts for 1-1/4" (Copper O.D. 7/8" & Steel Dia. 1/2")
62226	62226	Reduction Inserts for 1-1/4" (Copper O.D. 1")
62215	62215	Reduction Inserts for 1-1/4" (Steel Dia. 3/4")
62227	62227	Reduction Inserts for 1-1/4" (Copper O.D. 1-1/8")
62216	62216	Reduction Inserts for 1-1/4" (Copper O.D. 1-3/8" & Steel Dia. 1")



80007

KIBOSH™ - EMERGENCY PIPE REPAIR

- Instant temporary repair to minimize water damage
- Allows for pipe to be kept in use until permanent repair is done
- Accommodates split pipes and most fittings for maximum versatility
- Easy cantilever closing action for strong seal - up to 87 psi
- Reusable and no tools required
- Ideal for frost damage or accidentally perforated water pipes
- Safely installed for up to one week
- Use on both metal and hard plastic pipes

CAT. NO.	UPC NO.	DESCRIPTION
80007	80007	KIBOSH 1/2"
80012	80012	KIBOSH 3/4"

GREENLEE®
A Textron Company

GREENLEE MECHANICAL SOLUTIONS
PIPE & DRAIN CLEANING



ROSPI™ H+E PLUS



Professional Manual and Electrical Drain Cleaning Unit
Clean and comfortable removal of obstructions in kitchen, bath, toilets, or drainage openings with drain cleaning spiral

- Removal of sinks and siphon filters is not necessary
- Switch from manual to electrical use within seconds
- Secure hold even at higher speeds during drill operation
- Impact-resistant and protected from dirt contamination
- Hexagonal drive for conventional power drill

CAT. NO.	UPC NO.	DESCRIPTION
72095	72095	ROSPI 8 PLUS Drain Cleaner
72412	72412	Cable Replacement 5/8" X 25 Ft



72869V

Kit Includes - R600 (72869V) 5x Cables 7/8" Dia. (72441) Cable Basket (72112), Guide Hose (72541), Guide Glove, Separating Pin (72101), Straight Auger (72221), Bulb Auger (72263), Spade Head Cutter (72261), Funnel Auger (72222) Serrated Forked Cutter (72250)

R600 DRAIN CLEANING MACHINE

For Pipes ¾" – 6" Diameter, the R600 is Ideal for Installation and Maintenance Work in Hospitals and Municipal Buildings

- **Reinforced Guide Hose Sheathing with Precision Quick Coupling** - Safe, kink-free cable feed; prevents dirt ingress
- **Die-Cast Aluminum Frame And Fiberglass Reinforced Side Panels** - Extremely light and sturdy
- **Clamping Device** - For secure lengthening/shortening of cables
- **Lockable Drive Lever** - Serves as carrying handle
- **Optional Tri-Pod Stand** - Provides safe, non-slip, higher position of machine when working on toilets and Inspection Holes
- Cable Size 7/8" and 5/8"
- For Pipe Sizes 3/4" – 6" Dia.
- **Maximum Working Length** - 200 Ft with 7/8" Cables, 165 Ft with 5/8" Cables
- **Rating -** 0.4 kW (0.55 HP) RH and LH Drive
- **Speed -** 467 RPM

CAT. NO.	UPC NO.	DESCRIPTION
72869V	02724	R600V Drain Cleaning Machine with Guide Hose
72676	72676	R600V with Accessories
72541	72541	R600 Guide Hose 13 Ft
72638	72638	R600 Clutch Jaws with Springs
58182	58182	R600 Collapsible Tri-Pod Stand
72101	72101	Separating Pin for 7/8" & 1-1/4" Cables/Tools

CAT. NO.	UPC NO.	DESCRIPTION
72112	72112	Cable Basket for 7/8" Cables, 74 Max Ft
72441	72441	Cable, 7/8" Dia. 15 Ft
72431	72431	Drain Cleaning Cable 5/8" X 7.5 Ft
72451	72451	Drain Cleaning Cable 1-1/4" X 15 Ft
72110	72110	Cable Basket for 5/8" Cables, 113 Max Ft
72111	72111	Cable Basket for 1-1/4" Cables, 59 Max Ft

GREENLEE®
A Textron Company

SERRATED FORKED CUTTER



72250

- Universal tool for sludge deposits and roots
- Hardened spring steel with teeth on both sides

CAT. NO.	UPC NO.	MATERIAL DESCRIPTION	DIA.	WORKING RANGE
72250	72250	Serrated Forked Cutter 7/8"	3" – 4"	4" – 6"
72350	72350	Serrated Forked Cutter 1-1/4"	4" – 4"	4-3/4" – 8"

CROSS-BLADE CUTTER, SERRATED



72275

- Powerful tool with hardened, break-proof, steel blades
- Use for textile or sludge obstructions and coarse removal of encrustations
- Use as preparatory tool for chain spinning
- Recommended for use with SMK cables

CAT. NO.	UPC NO.	MATERIAL DESCRIPTION	DIA.	WORKING RANGE
72275	72275	Cross-Blade Cutter (Serrated) 7/8"	1-3/4" – 2-3/8"	2-3/4" – 4"
72374	72374	Cross-Blade Cutter (Serrated) 1-1/4"	1-3/4" – 2-3/8"	2-3/4" – 4-1/8"

CHAIN-SPINNING HEADS WITH SPIKE

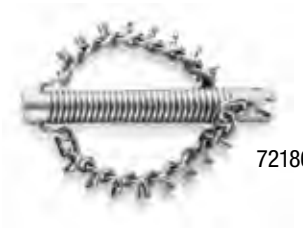

72186

- Without ring improved maneuvering in pipe bends
- Intensive cleaning action: reduces risk of renewed obstructions
- Ideal for final cleaning of pipe
- For concrete and cast iron pipes

CAT. NO.	UPC NO.	MATERIAL DESCRIPTION	DIA.	WORKING RANGE
72186	72186	Chain-Spinning Heads with Spikes 5/8"	1-1/8" – 6-1/8"	2" – 5"
72278	72278	Chain-Spinning Heads with Spikes 7/8"	2" – 6-5/8"	2-3/4" – 5"
72347	72347	Chain-Spinning Heads with Spikes 1-1/4"	2-3/4" – 8-5/8"	3-1/2" – 5-1/2"

TWO-WAY ROOT CUTTER



72265

- For chopping up roots and solid materials
- Hardened spring steel with teeth on front and back
- Cuts in both directions

CAT. NO.	UPC NO.	MATERIAL DESCRIPTION	DIA.	WORKING RANGE
72265	72265	Two-Way Root Cutter 7/8"	2-1/2" – 3-1/8"	3" – 4"
72365	72365	Two-Way Root Cutter 1-1/4"	2-1/2" – 3-1/8"	3" – 4"



72169

GREASE CUTTER

- Standard tool for removing grease and other soft deposits, such as soap accumulations

CAT. NO.	UPC NO.	MATERIAL DESCRIPTION	DIA.	WORKING RANGE
72169	72169	Grease Cutter 5/8"	1" – 1-3/8"	1-1/2" – 3"
72234	72234	Grease Cutter 7/8"	1-3/8" – 1-3/4"	2" – 3"
72170	72170	Grease Cutter 1-3/8" Dia 5/8"	1-3/4" – 2-3/8"	2-3/8" – 5"



72161

STRAIGHT AUGER

- Standard tool for establishing the nature of an obstruction in order to determine suitable cleaning tool
- For snagging or drilling through obstructions caused by textiles, paper, cellulose materials, kitchen refuse, etc.

CAT. NO.	UPC NO.	MATERIAL DESCRIPTION	DIA.	WORKING RANGE
72161	72161	Straight Auger 5/8"	5/8" – 4-3/8"	1" – 3"
72221	72221	Straight Auger 7/8"	7/8" – 8-1/4"	2" – 4"
72321	72321	Straight Auger 1-1/4"	1-1/4" – 8-5/8"	3" – 10"



72166

SPIRAL SAWTOOTH CUTTER

- Special tool for chopping up small roots, branches and other materials

CAT. NO.	UPC NO.	MATERIAL DESCRIPTION	DIA.	WORKING RANGE
72166	72166	Spiral Sawtooth Cutter 5/8"	1" – 1-3/4"	2" – 3"
72229	72229	Spiral Sawtooth Cutter 7/8"	1-9/16" – 1-3/4"	3" – 4"
72329	72329	Spiral Sawtooth Cutter 1-1/4"	2-1/8" – 2-1/2"	3" – 4"



72162

RETRIEVING AUGER

- Specially designed tool with a claw for retrieving textiles, tools, cables, etc.

CAT. NO.	UPC NO.	MATERIAL DESCRIPTION	DIA.	WORKING RANGE
72162	72162	Retrieving Auger 5/8"	1-3/8" – 2-1/8"	2" – 3"
72203	72203	Retrieving Auger 7/8"	1-3/4" – 4"	3" – 6"
72325	72325	Retrieving Auger 1-1/4"	2-1/2" – 5"	3" – 10"

GREENLEE®
A Textron Company


72261

SPADE-HEAD CUTTER

- Special curved tool for silt and sludge deposits

CAT. NO.	UPC NO.	MATERIAL DESCRIPTION	DIA.	WORKING RANGE
72261	72261	Spade-Head Cutter 7/8"	2-1/2"	4" – 6"
72360	72360	Spade-Head Cutter 1-1/4" X 2-1/2"	2-1/2" – 2-3/4"	4" – 6"


72163

BULB AUGER

- Specially designed for small pipes and drains with multiple bends
- Standard, highly flexible tool for clearing light textile & paper obstructions

CAT. NO.	UPC NO.	MATERIAL DESCRIPTION	DIA.	WORKING RANGE
72163	72163	Bulb Auger 5/8"	5/8" – 4-3/8"	1" – 3"
72263	72263	Bulb Auger 7/8"	7/8" – 8-1/4"	2" – 4"
72363	72363	Bulb Auger 1-1/4"	1-1/4" – 8-5/8"	3" – 10"


72191

CARBIDE-TIPPED CUTTERS

- Carbide tipped blades clear hardest obstructions and encrustations such as cement deposits, urine and water scale
- Blades are securely mounted to tool body for long service life
- Recommended for use with S or SMK cables

CAT. NO.	UPC NO.	MATERIAL DESCRIPTION	DIA.	WORKING RANGE
72191	72191	Carbide-Tipped Cutter 5/8"	1"	1-3/8" – 2"
72291	72291	Carbide-Tipped Cutter 7/8"	1-3/16"	2" – 3"
72392	72392	Carbide-Tipped Cutter 1-1/4"	1-3/4"	2-3/8" – 4"


72165

FUNNEL AUGER

- Large grab capacity can also be used to retrieve cables
- For removing or opening up obstructions caused by textiles or paper

CAT. NO.	UPC NO.	MATERIAL DESCRIPTION	DIA.	WORKING RANGE
72165	72165	Funnel Auger 5/8"	1-1/4" – 4-3/8"	2" – 4"
72222	72222	Funnel Auger 7/8"	2-1/8" – 7-1/4"	4" – 6"
72322	72322	Funnel Auger 1-1/4"	2-3/8" – 7-5/8"	4" – 10"

NOTES

GREENLEE®
A Textron Company

GREENLEE MECHANICAL SOLUTIONS
HAND TOOLS



WATER PUMP PLIERS/ROLOCK™ PLIERS

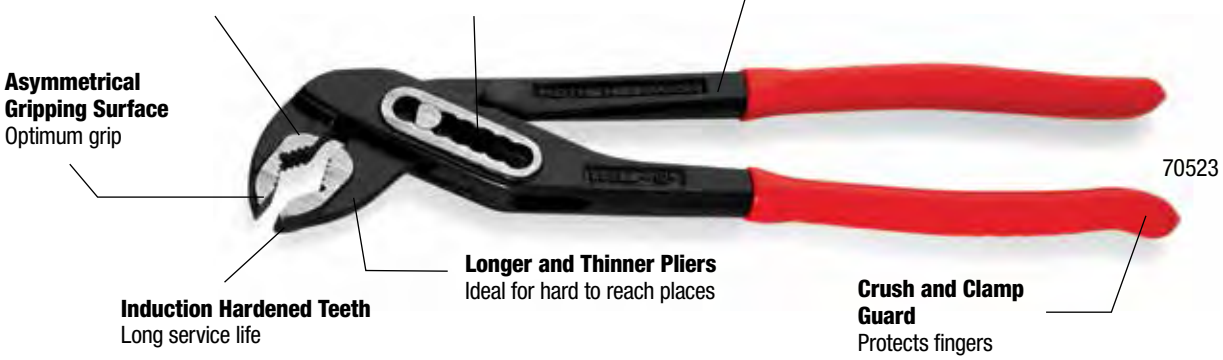

CAT. NO.	UPC NO.	DESCRIPTION
70521	70521	Water Pump Pliers 7"
70522	70522	Water Pump Pliers 10"
70523	70523	Water Pump Pliers 12"
70532	70532	ROLOCK™ - Quick Adjusting Pliers 10"
70533	70533	ROLOCK™ - Quick Adjusting Pliers 12"



0451-12M



0451-12D

12" PUMP PLIERS

- Forged from chrome vanadium steel for greater strength and long life of the whole tool
- Precision-machined and hardened teeth for durability and long life
- Right-angled teeth for assured gripping power from both directions
- Exceeds ASME/ANSI specifications
- Note: This is not an insulated tool
- Lifetime limited warranty

0451-12M - Molded Grip Pump Pliers
Slip proof molded grips for increased comfort and reduced fatigue

0451-12D - Dipped Grip Pump Pliers
Double layered vinyl handles for comfort and slip resistance

CAT. NO.	UPC NO.	DESCRIPTION
0451-10M	54709	Molded Grip Pump Pliers 10"
0451-12M	54744	Molded Grip Pump Pliers 12"
0451-10D	89259	Dipped Grip Pump Pliers 10"
0451-12D	89260	Dipped Grip Pump Pliers 12"
0451-16D	54707	Dipped Grip Pump Pliers 16"

GREENLEE®
A Textron Company

HIGH LEVERAGE SIDE-CUTTING PLIERS



0151-09M



0151-09D

- High leverage design provides 46% greater cutting and gripping power
- Forged chrome vanadium steel for greater strength and long life
- Laser hardened cutting knives keep edge and last longer than induction hardened knives
- Designed to provide long life even when cutting hardened wire, ACSR, screws, bolts, and nails
- Tempered handles help absorb the 'snap' and reduce fatigue when cutting through hardened wire, bolts, and screws
- Diamond serrated jaws for superior gripping power
- Exceeds ASME/ANSI specifications
- Note: This is not an insulated tool
- Lifetime limited warranty

CAT. NO.	UPC NO.	DESCRIPTION
0151-08M	54701	Molded Grip High Leverage Side-Cutting Pliers 8"
0151-09M	54702	Molded Grip High Leverage Side-Cutting Pliers 9"
0151-09CM	13488	Molded Grip Crimping Pliers 9"
0151-09SM	89264	Molded Grip High Leverage Side-Cutting Pliers with Stripping Hole 9"
0151-08D	89263	Dipped Grip High Leverage Side-Cutting Pliers 8"
0151-09D	89250	Dipped Grip High Leverage Side-Cutting Pliers 9"
0151-09CD	13487	Dipped Grip Crimping Pliers 9"
0151-09FD	89262	Dipped Grip Fish Tape Pulling Pliers 9"

DIAGONAL CUTTING PLIERS



0251-08D



0251-08M

- High leverage design provides greater cutting and gripping power
- Forged chrome vanadium steel for greater strength and long life
- Laser hardened cutting knives keep edge and last longer than induction hardened knives
- Designed to provide long life even when cutting hardened wire, ACSR, screws, bolts, and nails
- Tempered handles help absorb the 'snap' and reduce fatigue when cutting through hardened wire, bolts, and screws
- Exceeds ASME/ANSI specifications
- Note: This is not an insulated tool
- Lifetime limited warranty

CAT. NO.	UPC NO.	DESCRIPTION
0251-06M	54737	Molded Grip Diagonal Cutting Pliers 6"
0251-07M	54738	Molded Grip High Leverage Diagonal Cutting Pliers 7"
0251-08M	54739	Molded Grip High Leverage Diagonal Cutting Pliers 8"
0251-08AM	54740	Angled Molded Grip High Leverage Diagonal Cutting Pliers 8"
0251-06D	89256	Dipped Grip Diagonal Cutting Pliers 6"
0251-08D	89254	Dipped Grip High Leverage Diagonal Cutting Pliers 8"
0251-08AD	89258	Angled Dipped Grip High Leverage Diagonal Cutting Pliers 8"



0351-08M

0351-08SD

LONG NOSE SIDE CUTTING AND STRIPPING PLIERS

- Forged chrome vanadium steel for greater strength and long life
- Laser hardened cutting knives keep edge and last longer than induction hardened knives
- Designed to provide long life even when cutting hardened wire
- Serrated jaws for stronger gripping power
- Exceeds ASME/ANSI specifications
- Note: This is not an insulated tool
- Lifetime limited warranty

CAT. NO.	UPC NO.	DESCRIPTION
0351-06M	54717	Molded Grip Long Nose & Side Cutting Pliers 6"
0351-08M	54719	Molded Grip Long Nose & Side Cutting Pliers 8"
0351-08SM	20958	Molded Grip Long Nose & Stripping Pliers 8"
0351-07D	54718	Dipped Grip Long Nose & Side Cutting Pliers 7"
0351-08SD	20958	Dipped Grip Long Nose & Stripping Pliers 8"



GREENLEE®
A Textron Company

HEAVY-DUTY STEEL PIPE WRENCH



70154

- Monoblock cast body with high strength, double T profile, forged jaw and hook, fine-polished teeth set against turning direction, induction hardened, tempered and anti-slip adjustment screw
- Spring-supported hook
- One-handed ratchet-like use
- Quick preset of tube diameter using scale on hook
- Sizes available in 1", 1-1/2", 2", 2-1/2", 3", 5" and 6"

CAT. NO.	UPC NO.	DESCRIPTION
70150	70150	Heavy-Duty Steel Pipe Wrench 8"
70151	70151	Heavy-Duty Steel Pipe Wrench 10"
70152	70152	Heavy-Duty Steel Pipe Wrench 12"
70153	70153	Heavy-Duty Steel Pipe Wrench 14"
70154	70154	Heavy-Duty Steel Pipe Wrench 18"
70155	70155	Heavy-Duty Steel Pipe Wrench 24"
70156	70156	Heavy-Duty Steel Pipe Wrench 36"
70157	00122	Heavy-Duty Steel Pipe Wrench 48"

HEAVY-DUTY ALUMINUM PIPE WRENCH



70159

- Features similar to Heavy-duty steel pipe wrench
- Extremely light aluminum alloy with high strength approximately 40% lighter
- Aluminum pipe wrench for PVC coated conduit has specially designed jaws for gripping coated pipe; protects plastic coating
- Sizes available in 1", 1-1/2", 2", 2-1/2", 3", 5" and 6"
- Sizes available for PVC coated in 1-1/2", 2", 2-1/2" and 3"

CAT. NO.	UPC NO.	DESCRIPTION
70159	70159	Aluminum Pipe Wrench 10"
70160	70160	Aluminum Pipe Wrench 14"
70161	70161	Aluminum Pipe Wrench 18"
70162	70162	Aluminum Pipe Wrench 24"
70163	70163	Aluminum Pipe Wrench 36"
70164	00132	Aluminum Pipe Wrench 48"
P70159C	70159	Aluminum Pipe Wrench for PVC Coated Pipe 10"
P70160C	16107	Aluminum Pipe Wrench for PVC Coated Pipe 14"
P70161C	06107	Aluminum Pipe Wrench for PVC Coated Pipe 18"
P70162C	70162	Aluminum Pipe Wrench for PVC Coated Pipe 24"

HEAVY-DUTY STEEL OFFSET PIPE WRENCH



70166

- **Offset Wrench Head** - Ideal for work in confined spaces or close to walls
- Features similar to Heavy-duty steel pipe wrench
- Sizes available in 1-1/2" and 2"

CAT. NO.	UPC NO.	DESCRIPTION
70166	70166	Heavy-Duty Steel Offset Pipe Wrench 10"
70167	70167	Heavy-Duty Steel Offset Pipe Wrench 14"

HEAVY-DUTY ALUMINUM OFFSET PIPE WRENCH


70115

- Features similar to Heavy-duty steel pipe wrench
- **Extremely Light Aluminum Alloy with High Strength** - Approximately 40% lighter
- **Offset Wrench Head** - Ideal for work in confined spaces or close to walls
- Sizes available in 2" and 2-1/2"

CAT. NO.	UPC NO.	DESCRIPTION
70115	70115	Aluminum Offset Pipe Wrench 14"
70116	70116	Aluminum Offset Pipe Wrench 18"

HEAVY-DUTY CHAIN PIPE WRENCH


70246

- Very tough design for the most demanding applications, tried and tested in pipeline construction, forged jaws and handle; replaceable jaws
- **Strong Chain Made of Tempered Special Steel -** Fits every cross-section
- **Double-Sided Tooth System for Ratchet-Like Use -** For right and left-handed motion
- Sizes available in 2-1/2", 4", 6" and 8"

CAT. NO.	UPC NO.	DESCRIPTION
70243	70243	Heavy-Duty Chain Pipe Wrench 2-1/2"
70244	70244	Heavy-Duty Chain Pipe Wrench 4"
70245	70245	Heavy-Duty Chain Pipe Wrench 6"
70246	70246	Heavy-Duty Chain Pipe Wrench 8"

4" CHAIN PIPE WRENCH


70235

- Profile handle made of drop forged, chrome vanadium steel, polished head and powerful chain made of tempered special steel
- With a double-sided teeth surface set against the turning direction
- Works in both directions without re-inserting

CAT. NO.	UPC NO.	DESCRIPTION
70235	70235	Chain Pipe Wrench 4"

STRAP AND FITTING WRENCH


70240

- Made of special aluminum alloy, with replaceable nylon strap
- **Safe to Use on Chrome-Plated Fittings** - No damage to polished surfaces
- Sizes available in 3" and 8"

CAT. NO.	UPC NO.	DESCRIPTION
70240	70240	Strap and Fittings Wrench 3"
70241	70241	Strap and Fittings Wrench 8"

GREENLEE®
A Textron Company



70225

TELESCOPIC BASIN NUT WRENCH

- **Telescopic Action** - 4 length adjustments
- Chrome-plated, with pivoted reversible jaw

CAT. NO.	UPC NO.	DESCRIPTION
70225	70225	Telescopic Basin Nut Wrench 3/8" – 1-1/4"
70226	70226	Telescopic Basin Nut Wrench 1-1/4" - 2-1/2"

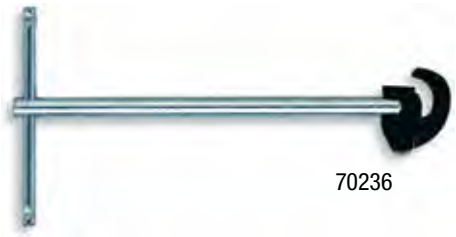

70236

STANDARD BASIN NUT WRENCH

- Chrome-plated, with pivoted reversible jaw

CAT. NO.	UPC NO.	DESCRIPTION
70236	70236	Basin Nut Wrench 3/8" – 1-1/4"



70416

SANIGRIP PL PLIER

- Special chrome vanadium steel, drop forged, chrome-plated, 4 adjustable sizes at joint, with teethed grip jaws
- SANIGRIP PL features plastic jaws to protect fittings
- **Ideal for Plastic Screw Joints up to Dia. 2-3/8" (62 mm)** - Optimum grip
- **Secure and Gentle Grip on Precious Fittings** - No damage to polished surfaces

CAT. NO.	UPC NO.	DESCRIPTION
70416	70416	SANIGRIP PL Plier 10"
70417	00835	SANIGRIP PL Plier Spare Plastic Jaws (Pair)



70615

PLUMBER'S 7-PIECE REPAIR KIT

- All the tools you need for a typical repair job in a sturdy carrying case; Thread, grip and cut 1/2" through 1" pipe
- **Kit Includes -** Heavy-duty tool bag (40231), ROTRAC 42 Plus (70021), 18" aluminum pipe wrench (70161), ROCUT® 50TC shear (52010R), ROFIRE swivel torch, 10" plumber's pliers (70522), basin wrench (70225)

CAT. NO.	UPC NO.	DESCRIPTION
70615	70615	Plumber's 7-Piece Repair Kit
40231	40231	Tool Bag



KP1022



KP1022D

CRIMPING COMBINATION TOOL

- Heavy-duty forged, heat treated steel for greater strength and long life of the tool
- Crimps both 10-22 AWG insulated and non-insulated terminals and connectors
- Machine hardened steel cutting blades for long life, even when cutting hardened wire
- Exceeds ASME/ANSI specifications
- Note: This is not an insulated tool
- Lifetime limited warranty

Molded Grip Handles

- Slip proof, ergonomic molded grips and half handles for increased comfort and reduced fatigue
- Location of handle ridge allows the user to "choke up" for greater control

Dipped Grip Handles

- Double layered vinyl handles for comfort and slip resistance
- Reduced handle size for easy storage in pouches and bags

CAT. NO.	UPC NO.	DESCRIPTION
KP1022	02155	Molded Grip Terminal Crimping Tool
KP1022D	10633	Dipped Grip Terminal Crimping Tool



GREENLEE®
A Textron Company

PRO STAINLESS STEEL WIRE STRIPPERS/ CUTTERS/CRIMPERS


1950-SS


1955-SS


1956-SS

- Cutlery grade stainless steel prevents wear and corrosion to provide 5X longer life
- Pliers grab, form and bend wires
- Precision ground strippers engineered for clean, easy insulation removal
- Bolt threaders clean threads after shearing
- Comfort grips are double molded, lightweight and easy to grab
- Professional, multi-function tool includes a crimper, looper, non-obstructive lock mechanism, spring return, and high grade shears
- Note: This is not an insulated tool
- Lifetime warranty

CAT. NO.	UPC NO.	DESCRIPTION	SOLID STRIP	STRANDED STRIP	BOLT SHEAR	CRIMP
1950-SS	02241	Pro Stainless Wire Stripper/Cutter/Crimper	10-18	12-20	6-32, 8-32	16-10
1955-SS	01361	Curved Pro Stainless Wire Stripper/Cutter/Crimper	10-18	12-20	6-32, 8-33	16-10
1956-SS	02242	Curved Pro Stainless Wire Stripper/Cutter/Crimper	6-14	8-16	6-32, 8-34	16-10

STAINLESS STEEL WIRE STRIPPERS/CUTTERS


1916-SS


1917-SS

- Cutlery grade stainless steel prevents wear and corrosion to provide 5X longer life
- Pliers grab, form and bend wires
- Precision ground strippers engineered for clean, easy insulation removal
- Other features include a looper, non-obstructive lock mechanism, spring return, and high grade shears
- Note: This is not an insulated tool
- Lifetime warranty

CAT. NO.	UPC NO.	DESCRIPTION	SOLID STRIP	STRANDED STRIP	BOLT SHEAR	CRIMP
1916-SS	01359	Stainless Wire Stripper/Cutter	10-20	12-22	–	–
1917-SS	01360	Stainless Wire Stripper/Cutter	16-26	18-28	–	–



1927-SS

STAINLESS STEEL WIRE STRIPPERS/ CRIMPING COMBINATION TOOL

- Multi-functional, professional grade
- Cutlery grade stainless steel prevents wear and corrosion to provide 5X longer life
- Multiple bolt shears and crimpers for a wide range of tests
- Bolt threaders clean threads after shearing
- Precision ground strippers engineered for clean, easy insulation removal
- Comfort grips are double molded, lightweight and easy to grab
- Other features include a looper, non-obstructive lock mechanism, spring return, and high grade knives
- Note: This is not an insulated tool
- Lifetime warranty

CAT. NO.	UPC NO.	DESCRIPTION	SOLID STRIP	STRANDED STRIP	BOLT SHEAR	CRIMP
1927-SS	02243	Pro Stainless Combination Tool with Spring	8-18	10-20	4-40 to 10-24	Multiple



1923A

CRIMPING/STRIPPER COMBINATION TOOL

- Easily strip both solid and stranded wires, crimp terminals and cut screws and wire
- Precision ground blades ensure consistent stripping and cutting
- Double dipped grips for superior comfort and assured grip
- Heat treated for strength with black oxide finish for rust resistance
- Cleanly cuts and strips 10–22 AWG wire
- 2 wire cutters: middle cuts copper, tip also cuts hardened wire
- Cleanly cuts #4-40, #6-32 and #8-32, #10-24, #10-32 screws
- Crimps 10-22 AWG insulated and non-insulated terminals, splices and lugs
- Splices and terminates 7 mm and 8 mm ignition terminals
- Note: This is not an insulated tool
- Lifetime limited warranty

			CAP. AWG	
CAT. NO.	UPC NO.	DESCRIPTION	SOLID	STRANDED
1923A	00084	Crimping/Stripping Combination Tool	8-18	10-22

GREENLEE®
A Textron Company



0153-02C

7-PIECE SCREWDRIVER SET

- Heavy-duty construction for longer life
- Handle marked for easy identification of screwdriver size, type and length
- Precision-machined tips for accurate fastener contact
- Strong, durable black phosphate tips prevent chipping of plating
- High-grade, rust resistant, chrome-plated finish
- Cushion grip handle for extra comfort and torque
- Exceeds ASME/ANSI specifications
- Note: This is not an insulated tool
- Lifetime limited warranty
- Contains: 3/16" x 4" Cabinet, 3/16" x 6" Cabinet, 1/4" x 4" Keystone, 1/4" x 4" Cabinet, 5/16" x 6" Keystone, #1 x 3" Phillips & #2 x 4" Phillips

CAT. NO.	UPC NO.	DESCRIPTION
0153-02C	54661	7-Piece Screwdriver Set



0153-01C

5-PIECE SCREWDRIVER SET

- Heavy-duty construction for longer life
- Handle marked for easy identification of screwdriver size, type and length
- Precision-machined tips for accurate fastener contact
- Strong, durable black phosphate tips prevent chipping of plating
- High-grade, rust resistant, chrome-plated finish
- Cushion grip handle for extra comfort and torque
- Exceeds ASME/ANSI specifications
- Note: This is not an insulated tool
- Lifetime limited warranty
- Contains: 3/16" x 6" Cabinet, 1/4" x 4" Keystone, 1/4" x 6" Cabinet, 5/16" x 6" Keystone & #2 x 4" Phillips

CAT. NO.	UPC NO.	DESCRIPTION
0153-01C	56303	5-Piece Screwdriver Set


0153-03C

MINI SCREWDRIVER SET

- Precision machined tips for exact fastener fit
- Strong durable black phosphate tips to prevent chipping or plating
- Handle marked for easy identification of screwdriver size and type
- Cushion grip handle for extra comfort and no slipping
- Designed to meet ASME/ANSI specifications
- Note: This is not an insulated tool
- Lifetime limited warranty
- Contains: Sizes #0 Phillips, 1/16" Keystone, 3/32" Cabinet & 1/8" Cabinet

CAT. NO.	UPC NO.	DESCRIPTION
0153-03C	13438	4-Piece Mini Screwdriver Set (Round Shank)


0153-43C

9-IN-1 MULTI-TOOL DRIVER

- Versatile multi-bit screwdriver, 9 tools in one
- Drive hex nuts, Phillips, Square Recess and slotted fasteners
- High-grade, rust resistant, chrome-plated finish
- Precision-machined, hardened steel bits
- Cushion grip handle for extra comfort and torque
- Note: This is not an insulated tool
- Lifetime limited warranty
- Contains bits: #1 & #2 Phillips, #1 & #2 Square Recess and 3/16" & 1/4" Flat Tip, 1/4", 5/16" & 3/8" Hex

CAT. NO.	UPC NO.	DESCRIPTION
0153-43C	13490	9-In-1 Multi-Tool
9953-15	10628	Replacement Bits 9-In-1


0153-42C

6-IN-1 MULTI-TOOL DRIVER

- Versatile multi-bit screwdriver, 6 tools in one
- Precision machined, hardened steel bits
- High-grade, rust resistant, chrome-plated finish
- Cushion grip handle for extra comfort and torque
- Note: This is not an insulated tool
- Lifetime limited warranty
- Contains: 3/16" & 1/4" Flat-Tip, #1 & #2 Phillips and 5/16” & 1/4" Hex

CAT. NO.	UPC NO.	DESCRIPTION
0153-42C	56308	6-In-1 Multi-Tool
9953-13	56310	Replacement Bits – 3/16" & 1/4" Flat-tip and #1 & #2 Phillips

GREENLEE®
A Textron Company



0153-14C

HEAVY-DUTY KEYSTONE TIP SCREWDRIVER

- Square shank allows use of wrench or pliers for added torque
- Handle marked for easy identification of screwdriver size, type and length
- Rugged keystone tip for additional strength
- Precision-machined tips for accurate fastener contact
- Strong, durable black phosphate tips prevent chipping of plating
- Cushion grip handle for extra comfort and torque
- Exceeds ASME/ANSI specifications
- Note: This is not an insulated tool
- Lifetime limited warranty

CAT. NO.	UPC NO.	DESCRIPTION
0153-11C	54644	Square Shank 1/4" x 4" Flat Blade Screwdriver
0153-12C	54645	Square Shank 1/4" x 6" Flat Blade Screwdriver
0153-13C	54646	Square Shank 1/4" x 8" Flat Blade Screwdriver
0153-14C	54647	Square Shank 1/4" x 10" Flat Blade Screwdriver
0153-15C	56304	Square Shank 5/16" x 6" Flat Blade Screwdriver
0153-16C	56305	Square Shank 3/8" x 8" Flat Blade Screwdriver



0153-21C

HEAVY-DUTY CABINET TIP SCREWDRIVER

- Narrow cabinet tip for limited access applications
- Handle marked for easy identification of screwdriver size, type and length
- Precision-machined tips for accurate fastener contact
- Strong, durable black phosphate tips prevent chipping of plating
- Cushion grip handle for extra comfort and torque
- Exceeds ASME/ANSI specifications
- Note: This is not an insulated tool
- Lifetime limited warranty

CAT. NO.	UPC NO.	DESCRIPTION
0153-21C	54652	Round Shank 3/16" x 4" Flat Blade Screwdriver
0153-22C	54653	Round Shank 3/16" x 6" Flat Blade Screwdriver
0153-23C	54654	Round Shank 3/16" x 8" Flat Blade Screwdriver
0153-24C	54655	Round Shank 3/16" x 10" Flat Blade Screwdriver
0153-25C	54649	Round Shank 1/4" x 4" Flat Blade Screwdriver
0153-26C	54650	Round Shank 1/4" x 6" Flat Blade Screwdriver
0153-27C	54651	Round Shank 1/4" x 8" Flat Blade Screwdriver



0153-32C



0153-28C

STUBBY SCREWDRIVER

- Precision-machined tips for exact fit
- Handle marked for easy identification of screwdriver size, type and length
- Strong, durable black phosphate tips prevent chipping of plating
- Cushion grip handle for extra comfort and torque
- Exceeds ASME/ANSI specifications
- Note: This is not an insulated tool
- Lifetime limited warranty

CAT. NO.	UPC NO.	DESCRIPTION
0153-04C	13491	Stubby 2 PC Screwdriver Set
0153-28C	54648	Round Shank 1/4" x 1-1/2" Flat Blade Screwdriver
0153-32C	54657	Heavy-Duty Phillips Tip #2 x 1-1/2" Screwdriver



0153-33C

HEAVY-DUTY PHILLIPS TIP SCREWDRIVER

- Precision-machined tips for exact fit
- Handle marked for easy identification of screwdriver size, type and length
- Strong, durable black phosphate tips prevent chipping of plating
- Cushion grip handle for extra comfort and torque
- Exceeds ASME/ANSI specifications
- Note: This is not an insulated tool
- Lifetime limited warranty

CAT. NO.	UPC NO.	DESCRIPTION
0153-31C	54656	Heavy-Duty Phillips Tip #1 x 3" Screwdriver
0153-33C	54658	Heavy-Duty Phillips Tip #2 x 4" Screwdriver
0153-34C	54659	Heavy-Duty Phillips Tip #2 x 6" Screwdriver
0153-35C	54660	Heavy-Duty Phillips Tip #3 x 6" Screwdriver
0153-36C	89213	Heavy-Duty Phillips Tip #2 x 10" Screwdriver

GREENLEE®
A Textron Company



0353-01C

4-PIECE SQUARE-RECESS TIP DRIVER SET

- Precision tip for accurate fastener fit
- Handle marked and color coded for easy identification of screwdriver size and type
- Heavy-duty construction for longer life
- High-grade, rust resistant, chrome-plated finish
- Cushion grip handle for extra comfort and torque
- Exceeds ASME/ANSI specifications
- Note: This is not an insulated tool
- Lifetime limited warranty
- Contains: #0 x 4", #1 x 4", #2 x 4" & #3 x 4"

CAT. NO.	UPC NO.	DESCRIPTION
0353-01C	54695	4-Piece Square-Recess Tip Driver Set



0353-13C

SQUARE-RECESS TIP DRIVERS

- Precision tip for accurate fastener fit
- Handle marked and color coded for easy identification of screwdriver size and type
- Heavy-duty construction for longer life
- High-grade, rust resistant, chrome-plated finish
- Cushion grip handle for extra comfort and torque
- Exceeds ASME/ANSI specifications
- Note: This is not an insulated tool
- Lifetime limited warranty

CAT. NO.	UPC NO.	DESCRIPTION
0353-11C	54688	Square-Recess Tip Driver - #0 x 4"
0353-12C	54689	Square-Recess Tip Driver - #1 x 4"
0353-13C	54691	Square-Recess Tip Driver - #2 x 4"
0353-14C	54693	Square-Recess Tip Driver - #3 x 4"
0353-21C	89214	Square-Recess Tip Driver - #0 x 8"
0353-22C	89215	Square-Recess Tip Driver - #1 x 8"
0353-23C	89216	Square-Recess Tip Driver - #2 x 8"
0353-24C	89217	Square-Recess Tip Driver - #3 x 8"



0353-32C

STUBBY SQUARE-RECESS TIP DRIVER

- Precision tip for accurate fastener fit
- Handle marked and color coded for easy identification of screwdriver size and type
- Heavy-duty construction for longer life
- High-grade, rust resistant, chrome-plated finish
- Cushion grip handle for extra comfort and torque
- Exceeds ASME/ANSI specifications
- Note: This is not an insulated tool
- Lifetime limited warranty

CAT. NO.	UPC NO.	DESCRIPTION
0353-02C	89222	2-Piece Square-Recess Tip Stubby Driver Set, Contains - #1 & #2
0353-32C	89223	Square-Recess Tip Driver - #1 x 1-1/2"
0353-33C	89224	Square-Recess Tip Driver - #2 x 1-1/2"



9753-12C

SCRATCH AWL

- Integrated steel end cap for durability and long life
- Heavy-duty construction for piercing and scribing
- High-grade, rust resistant, chrome-plated finish
- Cushion grip handle for extra comfort and torque
- Note: This is not an insulated tool
- Lifetime limited warranty

CAT. NO.	UPC NO.	DESCRIPTION
9753-12C	54697	Scratch Awl 3"


0253-01C

7-PIECE NUT DRIVER SET

- Rugged hollow shaft for screw clearance
- Heavy-duty construction for longer life
- Handle and shaft marked for easy identification of nut driver size
- Precision 6-point sockets for accurate fastener fit
- High-grade, rust resistant, chrome-plated finish
- Cushion grip handle for extra comfort and torque
- Exceeds ASME/ANSI specifications
- Note: This is not an insulated tool
- Lifetime limited warranty
- Contains: (3" Shank): Sizes 3/16", 1/4", 5/16", 11/32", 3/8", 7/16" & 1/2"

CAT. NO.	UPC NO.	DESCRIPTION
0253-01C	54671	7-Piece Nut Driver Set

GREENLEE®
A Textron Company





0253-16C

HEAVY-DUTY NET DRIVERS

- Rugged hollow shaft for bolt clearance
- Heavy-duty construction for longer life
- Handle color marked for easy identification of nut driver size
- Precision 6-point sockets for accurate fastener fit
- High-grade, rust resistant, chrome-plated finish
- Cushion grip handle for extra comfort and torque
- Exceeds ASME/ANSI specifications
- Note: This is not an insulated tool
- Lifetime limited warranty

FRACTIONAL SIZES 3" SHAFT

CAT. NO.	UPC NO.	DESCRIPTION
0253-11C	54664	Heavy-Duty Nut Driver 3/16" x 3"
0253-12C	54665	Heavy-Duty Nut Driver 1/4" x 3"
0253-13C	54666	Heavy-Duty Nut Driver 5/16" x 3"
0253-14C	54667	Heavy-Duty Nut Driver 11/32" x 3"
0253-15C	54668	Heavy-Duty Nut Driver 3/8" x 3"
0253-16C	54669	Heavy-Duty Nut Driver 7/16" x 3"
0253-17C	54670	Heavy-Duty Nut Driver 1/2" x 3"

METRIC SIZES 75 MM SHAFT

CAT. NO.	UPC NO.	DESCRIPTION
0253-33C	89228	Heavy-Duty Nut Driver 5mm x 75mm
0253-34C	89229	Heavy-Duty Nut Driver 5.5mm x 75mm
0253-35C	89230	Heavy-Duty Nut Driver 6.0mm x 75mm
0253-36C	89231	Heavy-Duty Nut Driver 7.0mm x 75mm
0253-37C	89232	Heavy-Duty Nut Driver 8.0mm x 75mm
0253-38C	89233	Heavy-Duty Nut Driver 9.0mm x 75mm
0253-39C	89234	Heavy-Duty Nut Driver 10.0mm x 75mm
0253-41C	89235	Heavy-Duty Nut Driver 11.0mm x 75mm
0253-42C	89236	Heavy-Duty Nut Driver 12.0mm x 75mm
0253-43C	89237	Heavy-Duty Nut Driver 13.0mm x 75mm



0354-15

COMBINATION RATCHETING WRENCHES - FRACTIONAL

- Compact reversible switch allows a 15° offset of the box end for clearance of obstacles
- "Five-degree" ratcheting design for versatility and ease of use in tight spaces
- Polished chrome finish for superior corrosion resistance
- Precision heads for accurate fastener fit
- Hardened for durability and longer life
- Exceeds ASME/ANSI specifications
- Note: This is not an insulated tool
- Lifetime limited warranty

CAT. NO.	UPC NO.	DESCRIPTION
0354-11	55494	Combination Ratcheting Wrench 1/4"
0354-12	55495	Combination Ratcheting Wrench 5/16"
0354-13	55496	Combination Ratcheting Wrench 3/8"
0354-14	55497	Combination Ratcheting Wrench 7/16"
0354-15	55498	Combination Ratcheting Wrench 1/2"
0354-16	55499	Combination Ratcheting Wrench 9/16"
0354-17	55500	Combination Ratcheting Wrench 5/8"
0354-18	89268	Combination Ratcheting Wrench 11/16"
0354-19	89269	Combination Ratcheting Wrench 3/4"
0354-20	89270	Combination Ratcheting Wrench 13/16"
0354-21	89271	Combination Ratcheting Wrench 7/8"
0354-22	89272	Combination Ratcheting Wrench 15/16"
0354-23	89273	Combination Ratcheting Wrench 1"
0354-24	13517	Combination Ratcheting Wrench 1-1/16"
0354-25	13518	Combination Ratcheting Wrench 1-1/8"
0354-26	13519	Combination Ratcheting Wrench 1-1/4"



0354-01

7-PIECE COMBINATION RATCHETING WRENCH SET - FRACTIONAL

- Compact reversible switch allows a 15° offset of the box end for clearance of obstacles
- "Five-degree" ratcheting design for versatility and ease of use in tight spaces
- Polished chrome finish for superior corrosion resistance
- Precision heads for accurate fastener fit
- Hardened for durability and longer life
- Exceeds ASME/ANSI specifications
- Note: This is not an insulated tool
- Lifetime limited warranty
- Contains - Sizes 1/4", 5/16", 3/8", 7/16", 1/2", 9/16" & 5/8"

CAT. NO.	UPC NO.	DESCRIPTION
0354-01	55501	7-Piece Combination Ratcheting Wrench Set - Fractional

GREENLEE®
A Textron Company



0354-51

COMBINATION RATCHETING WRENCHES - METRIC

- Compact reversible switch allows a 15° offset of the box end for clearance of obstacles
- "Five-degree" ratcheting design for versatility and ease of use in tight spaces
- Polished chrome finish for superior corrosion resistance
- Precision heads for accurate fastener fit
- Hardened for durability and longer life
- Exceeds ASME/ANSI specifications
- Note: This is not an insulated tool
- Lifetime limited warranty

CAT. NO.	UPC NO.	DESCRIPTION
0354-51	89277	Combination Ratcheting Wrench 6mm
0354-52	89278	Combination Ratcheting Wrench 7mm
0354-54	89280	Combination Ratcheting Wrench 9mm
0354-56	89282	Combination Ratcheting Wrench 11mm
0354-59	89285	Combination Ratcheting Wrench 14mm
0354-60	89286	Combination Ratcheting Wrench 15mm
0354-61	89287	Combination Ratcheting Wrench 16mm
0354-63	89289	Combination Ratcheting Wrench 18mm
0354-64	89290	Combination Ratcheting Wrench 19mm



0354-02

7-PIECE COMBINATION RATCHETING WRENCH SET - METRIC

- Compact reversible switch allows a 15° offset of the box end for clearance of obstacles
- "Five-degree" ratcheting design for versatility and ease of use in tight spaces
- Polished chrome finish for superior corrosion resistance
- Precision heads for accurate fastener fit
- Hardened for durability and longer life
- Exceeds ASME/ANSI specifications
- Note: This is not an insulated tool
- Lifetime limited warranty
- Contains - Sizes 7mm, 9mm, 10mm, 11mm, 13mm, 14mm and 15 mm

CAT. NO.	UPC NO.	DESCRIPTION
0354-02	89274	7-Piece Combination Ratcheting Wrench Set - Metric



0154-10D

DIPPED HANDLE ADJUSTABLE WRENCH

- Heavy-duty construction to handle any size job
- Double-dipped vinyl handle for user comfort and slip resistance
- Precision-machined to tight tolerances for professional feel and smooth operation
- Wide capacity jaw design provides extra versatility
- Measuring scale on head for easy sizing
- Corrosion – resistant finish
- Exceeds ASME/ANSI specifications
- Note: This is not an insulated tool
- Lifetime limited warranty

CAT. NO.	UPC NO.	DESCRIPTION
0154-08D	89291	Dipped Handle Adjustable Wrench 8"
0154-10D	89292	Dipped Handle Adjustable Wrench 10"
0154-12D	89293	Dipped Handle Adjustable Wrench 12"


0254-40

T-HANDLE HEX KEY DRIVERS

- 10 piece set available for convenience and versatility (including sizes 3/32", 7/64", 1/8", 9/64", 5/32", 3/16", 7/32", 1/4", 5/16", 3/8")
- Heat-treated and tempered for extra strength and durability
- Exceeds ASME/ANSI specifications
- Ergonomic molded grips for max torque & comfort
- Ball end allows up to 30º misalignment
- Square-cut end for high torque applications
- Note: This is not an insulated tool
- Lifetime limited warranty

CAT. NO.	UPC NO.	DESCRIPTION
0254-40	13499	T-Handle Wrench Set, 10 PC
0254-42	13500	T-Handle Wrench, 3/32"
0254-43	13501	T-Handle Wrench, 7/64"
0254-44	13502	T-Handle Wrench, 1/8"
0254-45	13503	T-Handle Wrench, 9/64"
0254-46	13504	T-Handle Wrench, 5/32"
0254-47	13505	T-Handle Wrench, 3/16"
0254-48	13506	T-Handle Wrench, 7/32"
0254-49	13507	T-Handle Wrench, 1/4"
0254-50	89187	T-Handle Wrench, 5/16"
0254-51	89197	T-Handle Wrench, 3/8"

GREENLEE®
A Textron Company

9-PIECE FOLDING HEX-KEY SET - STANDARD



0254-11

- 9 piece set for convenience and versatility (including sizes 5/64", 3/32", 7/64", 1/8", 9/64", 5/32", 3/16", 7/32", 1/4")
- One-piece, powder-coated handle/case for corrosion resistance
- Laser-etched sizes on case for easy identification
- Heat-treated and tempered for extra strength and durability
- Exceeds ASME/ANSI specifications
- Lifetime limited warranty

CAT. NO.	UPC NO.	DESCRIPTION
0254-11	56323	9-Piece Folding Hex-Key Set

5-PIECE FOLDING HEX-KEY SET - STANDARD



0254-13

- 5 Piece folding set for convenience and versatility when stored in a pouch or toolbox
- Each hex key is heat treated and tempered for extra strength and durability
- Sizes included: 3/16", 7/32", 1/4", 5/16" & 3/8"
- Powder-coated case for corrosion resistance and long life
- Designed to exceed ASME/ANSI specifications
- Lifetime limited warranty

CAT. NO.	UPC NO.	DESCRIPTION
0254-13	56269	5-Piece Folding Hex-Key Set

9-PIECE FOLDING BALL-END HEX-KEY SET - STANDARD



0254-12

- 9 piece set for convenience and versatility (including sizes 5/64", 3/32", 7/64", 1/8", 9/64", 5/32", 3/16", 7/32", 1/4")
- Ball-end design allows for angled use up to 30°
- One-piece, powder-coated handle/case for corrosion resistance
- Laser-etched sizes on case for easy identification
- Heat-treated and tempered for extra strength and durability
- Exceeds ASME/ANSI specifications
- Lifetime limited warranty

CAT. NO.	UPC NO.	DESCRIPTION
0254-12	55482	9-Piece Folding Ball-End Hex-Key Set



UTILITY KNIFE

- Over-molded for secure, comfortable grip
- Retractable three-position blade for safety and convenience
- Easy front-loading design provides for quick blade change
- Blade storage in pop-up holder
- Packaged with three heavy-duty patented serrated blades (CAT # 9952-11)
- Note: This is not an insulated tool

CAT. NO.	UPC NO.	DESCRIPTION
0652-11	54729	Utility Knife with Blades
9952-11	56301	Blades for 0652-11 Utility Knife, 5 pack

PROFESSIONAL POCKET KNIVES



SPECIFICATIONS	BLADE	BLADE LENGTH	BLADE SAFETY	HANDLE SIZE	HANDLE MATERIAL	SHEATH
0652-24	440C Stainless Steel	2.25" (57mm)	Lock-back	3.50" (89mm)	Desert Ironwood with Stainless Bolsters and Belt Clip	—
0652-25	Titanium Coated 440C Stainless Steel	2.25" (57mm)	Lock-back	3.50" (89mm)	Anodized Aluminum with Reversible Belt Clip and Lanyard Hole	—
0652-26	440C Stainless Steel	2.25" (57mm)	Lock-back	3.25" (82mm)	Rosewood with Stainless Bolsters and Swivel Ring	—
0652-28	440C Stainless Steel	2.63" (67mm)	Lock-back	4.00" (101mm)	Rosewood with Swivel Ring	—
0652-29	440C Stainless Steel	3.00" (76mm)	—	7.80" (198mm)	Full-length Solid Tang with Rosewood Facing, Stainless Bolster and Lanyard Hole	Reinforced Nylon with Belt Loop

CAT. NO.	UPC NO.	DESCRIPTION
0652-24	00057	Drop Point Pocket Knife, Wood
0652-25	00058	Titanium-Coated Drop Point Pocket Knife, Aluminum
0652-26	00059	Coping Blade
0652-28	00061	Hawkbill Pocket Knife, Wood Handle
0652-29	00062	Hawkbill Fixed Blade with Sheath

GREENLEE®
A Textron Company

THREADED ROD CUTTER



36587

- One stroke cuts through threaded rod
- Capacity: 1/4"-20 and 3/8"-16 soft steel rod
- Cuts clean, eliminating the need to grind or file before threading a nut onto cut end
- Wide base for stable cutting
- Includes mounting hole for fast and easy permanent mounting to work surface
- Strong forged steel cutting head with tool steel cutting die for long life
- Includes: Threaded Rod Cutter, 1/4"- 20" Cutting Die Set, 3/8"- 16" Cutting Die Set

CAT. NO.	UPC NO.	DESCRIPTION
36587	36587	Threaded Rod Cutter
37186	37186	1/4" - 20" Cutting Die Set
37187	37187	3/8" - 16" Cutting Die Set

MINI MAGNETIC BUBBLE LEVEL

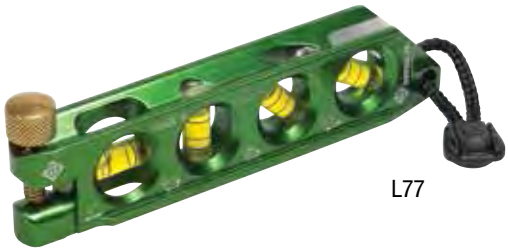

L77

- Professional grade level with bending offset aid
- Mini torpedo design with handy "no-dog" attachment for bending
- Three rare earth magnets provide superior holding strength
- Four vial design – 0°, 90°, 45°, and 30°
- Machined from aluminum alloy and anodized to aircraft standards
- Compact size fits easily in tool pouch
- Cutouts on top of level for easy view of vials

CAT. NO.	UPC NO.	DESCRIPTION
L77	11617	Mini Magnetic Bubble Level

MINI-MAGNET LASER LEVEL



L97

- Professional grade laser level
- Mini torpedo design with handy "no dog" attachment for bending
- Three rare earth magnets provide superior holding strength
- Compact size with 80-plus yard range
- Laser is capable of working on all planes
- Four vial design – 0°, 90°, 45° and 30°
- Cutouts on top of level for easy view of vials
- Offsets and calculations permanently laser engraved onto level
- V-groove on bottom for mounting on conduit
- Requires (2) "N" style batteries

CAT. NO.	UPC NO.	DESCRIPTION
L97	03582	Laser Level



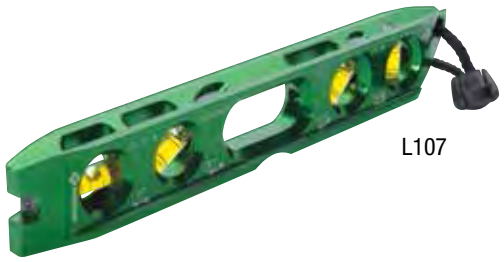

L107

TORPEDO LEVEL

- Professional grade level
- Perfect for pipe and conduit work
- Four rare earth magnets allow for hands-free use on metal surfaces
- Four vial design – 0°, 30°, 45° and 90°
- Machined from aluminum alloy and anodized to aircraft standards
- Cutouts on top of level for easy view of vials

CAT. NO.	UPC NO.	DESCRIPTION
L107	03583	Level, Torpedo



0155-7MA

0155-25A

POWER-RETURN TAPE MEASURES

- Compact housing fits easily in the hand or pouch
- Easy to use click lock holds tape securely
- Tough ABS case with rubber over mold
- Rigid 1" wide nylon coated blade is double-sided , with 6' standout
- 16" and 19.2" stud markings
- 0155-7MA has metric and english marketings
- Note: This is not an insulated tool

CAT. NO.	UPC NO.	DESCRIPTION
0155-25A	12479	Power Return Tape Measure, Double Tang/Sided, 25 Ft.
0155-7MA	12477	Power Return Tape Measure, Double Tang/Sided, 7.5 Meter

GREENLEE®
A Textron Company



FL2D

FL2AA

ALUMINUM LED FLASHLIGHTS

- Long-life 50,000 hour LED light source
- 1 watt LED (D size) and .5 watt LED (AA sizes)
- 2 brightness settings to extend battery life for D sizes
- Digitally regulated for constant brightness
- 4 times the battery life of equivalent Xenon
- Aircraft grade anodized aluminum
- Rugged all-weather design
- Anti-roll feature
- Batteries included

CAT. NO.	UPC NO.	DESCRIPTION	BATTERIES	BRIGHTNESS
FL2AA	13494	LED Aluminum Flashlight	(2) AA Alkaline	20 lumens
FL2D	13497	LED Aluminum Flashlight	(2) D Alkaline	85/30 lumens



0158-11

20" TOOL BAG

- Constructed of heavy-duty canvas for durability
- Sixteen canvas, interior & exterior pockets for additional versatility
- Full-grain leather bottom, sides and riveted buckle straps
- Washer rivets for extra strength
- Wrap around handles with reinforced stitching fully support bag bottom for heavy load capacity
- Reinforced bottom helps retain bag shape, while protecting and supporting tools
- Large-opening steel-framed mouth with hinge for rugged use and easy access to contents

SPECIFICATIONS

Dimensions	L - 20" (50.8 cm), W - 12" (30.5 cm), H - 10" (25.4 cm)

CAT. NO.	UPC NO.	DESCRIPTION
0158-11	56334	20" Canvas Bag



0158-12

18" HEAVY-DUTY MULTI-POCKET BAG

- Constructed of heavy-duty nylon for longer life
- Thirty-one multi-use reinforced pockets, inside and out help organize tools and accessories
- Large-opening steel-framed mouth with hinge and zipper for rugged use and easy access to contents
- Padded handles and adjustable shoulder strap for comfort and versatility
- Large interior to easily carry power tools, fish tapes and other large tools
- Wrap around handles with reinforced stitching fully support bag bottom for heavy load capacity
- Elastic straps on outside of bag for levels, hammers and crowbars

SPECIFICATIONS

Dimensions	L - 18" (45.7 cm), W - 11" (27.9 cm), H - 10" (25.4 cm)

CAT. NO.	UPC NO.	DESCRIPTION
0158-12	56335	18" Heavy-Duty Multi-Pocket Bag

GREENLEE®
A Textron Company



0158-19

16" TOOL CARRIER WITH PARTS BIN

- Versatile 15-pocket design accommodates a wide variety of hand tools
- 13" x 9" multi-compartment plastic tray for small parts storage including connectors, wire nuts, screws, etc.
- Padded shoulder strap and carrying handle
- Metal tool clip, electrical tape strap, tape measure clip and 4 pencil/punch tubes
- Main pocket with web loops to accommodate large tools
- Constructed of heavy-duty fabric for durability
- Steel-reinforced edges to maintain shape

SPECIFICATIONS

Dimensions	H - 10" (25.4 cm), D - 10" (25.4 cm), W - 16" (40.6 cm)

CAT. NO.	UPC NO.	DESCRIPTION
0158-19	13388	16" Tool Carrier Bag with Parts Bin



0158-14

12" CANVAS ZIPPER BAG

- Constructed of heavy-duty canvas for durability
- Strong zipper for secure closing
- Stores multiple small items or tools

SPECIFICATIONS

Dimensions	L - 12" (30.5 cm), H - 7" (17.8 cm)

CAT. NO.	UPC NO.	DESCRIPTION
0158-14	56338	12" Canvas Zipper Bag



0159-11

28-PIECE TOOL KIT

- All-inclusive tool kit
- Kit Includes: 18" Heavy-Duty Multi-Pocket Bag, Heavy-Duty 8-Pocket Leather Pouch, 2" Leather Tool Belt, 9" Side-Cutting Pliers, 8" Diagonal Cutting Pliers, 8" Long Nose Pliers, 10" Pump Pliers, Pro Plus Wire Stripper 10-18 AWG, NM Cable Ripper, Stripping/Crimping Combination Tool, Cable Cutter, Utility Knife, 12" Hacksaw, Keystone Tip Square Shank 1/4" x 4" Flat Blade Screwdriver, Keystone Tip Square Shank 5/16" x 6" Flat Blade Screwdriver, Cabinet Tip Round Shank 3/16" x 6" Flat Blade Screwdriver, Cabinet Tip Round Shank 1/4" x 6" Flat Blade Screwdriver, Phillips Tip #1 - 3/16" x 3" Screwdriver, Phillips Tip #2 - 1/4" x 4" Screwdriver, Screw-Holding Screwdriver 3/16" x 6", 3" Scratch Awl, 10" Adjustable Wrench, 9-Piece Folding Hex-Key Set, 25' Tape Measure, Torpedo Level, 18 oz Hammer, High Dexterity Gloves (L) and GT-11 Voltage Tester
- See individual product information for specifications
- Limited lifetime warranty

CAT. NO.	UPC NO.	DESCRIPTION
0159-11	56349	28 PC Tool Kit



0159-13

12-PIECE TOOL KIT - STANDARD

- Perfect kit for the professional or apprentice electrician
- Kit Includes: 2" Leather Tool Belt, 8-Pocket Leather Pouch, 25' Tape Measure, Phillips Tip #1 - 3/16" x 3" Screwdriver, Phillips Tip #2 - 1/4" x 4" Screwdriver, Cabinet Tip Round Shank 3/16" x 6" Flat Blade Screwdriver, Keystone Tip Square Shank 1/4" x 4" Flat Blade Screwdriver, Pro Plus Wire Stripper 10-18 AWG, 8" Long Nose Pliers, 10" Pump Pliers, 8" Diagonal Cutting Pliers and 9" Side-Cutting Pliers
- See individual product information for specifications
- Limited lifetime warranty

CAT. NO.	UPC NO.	DESCRIPTION
0159-13	56351	Tool Kit Standard - 12 PC

GREENLEE®
A Textron Company



0159-24

16-PIECE TOOL KIT - METRIC

- Perfect kit for the professional
- Kit Includes: High Leverage Side-Cutting Pliers 9" Molded Grip, High Leverage Diagonal Cutting Pliers 8" Molded Grip, High Leverage Long Nose Pliers/Side Cutting 8" Molded Grip, Pump Pliers 10" Molded Grip, Heavy-Duty Keystone Tip, Square Shank 1/4" x 4" Flat Blade Screwdriver, Heavy-Duty Cabinet Tip, Round Shank 3/16" x 6" Flat Blade Screwdriver, Heavy-Duty Phillips Tip #1 - 3/16" x 3" Screwdriver, Heavy-Duty Phillips Tip #2 -1/4" x 4" Screwdriver, 75m/25' Tape measure, Heavy-Duty 8 Pocket Leather Pouch, Heavy-Duty Leather Tool Belt, Pro Plus Wire Stripper 10-18 AWG, 4 PC Square Drive (Robertson) Set, Square Tip Driver #0X4", Square Tip Driver #1 X 4", Square Tip Driver #2 X 4", Square Tip Driver # 3X 4"
- See individual product information for specifications
- Limited lifetime warranty

CAT. NO.	UPC NO.	DESCRIPTION
0159-24	89239	Tool Kit - Metric - 16 PC



0159-36

6-PIECE KIT

- Kit Includes: 8" Long-Nose Pliers, 8" Diagonal Cutting Pliers, 9" High Leverage Side-Cutting Pliers, 1/4"x 4" Heavy-Duty Slotted Screwdriver, Cabinet Tip, #2 x 4" Heavy-Duty Phillips Screwdriver, Pro Plus Wire Stripper 10-18 AWG
- See individual product information for specifications
- Limited lifetime warranty

CAT. NO.	UPC NO.	DESCRIPTION
0159-36	31400	Hand Tool Kit -6 PC



0159-34

5-PIECE INSTALLATION KIT

- Kit Includes: 5 Pocket Leather Pouch, 9" Side-Sutting Pliers, Pro Plus Wire Stripper 10-18 AWG, Insulated and Uninsulated Terminal Crimping Tool, 6-in-1 Multi-Tool
- See individual product information for specifications
- Limited lifetime warranty

CAT. NO.	UPC NO.	DESCRIPTION
0159-34	10187	Installation Kit - 5 PC



STARTER TOOL KIT

- Four-pocket, heavy-duty, leather tool pouch holds an assortment of four professional grade hand tools
- Kit Includes: Heavy-Duty 4 Pocket Leather Pouch, Phillips Tip #2 - 1/4" X 4" Screwdriver, Cabinet Tip Round Shank 3/16" X 6" Flat Blade Screwdriver, Pro Plus Wire Stripper 10-18 AWG and 9" Side-Cutting Pliers
- See individual product information for specifications
- Limited lifetime warranty

CAT. NO.	UPC NO.	DESCRIPTION
0159-14	56352	Starter Tool Kit, 5 PC



4-PIECE KIT

- Four-pocket, heavy-duty, leather tool pouch holds an assortment of four professional grade hand tools
- Kit Includes: Heavy-Duty 4 Pocket Leather Pouch, Phillips Tip #2 - 1/4" X 4" Screwdriver, Cabinet Tip Round Shank 3/16" X 6" Flat Blade Screwdriver, Pro Plus Wire Stripper 10-18 AWG and 9" Side-Cutting Pliers
- See individual product information for specifications
- Limited lifetime warranty

CAT. NO.	UPC NO.	DESCRIPTION
0159-28	10191	Basic Kit - 4 PC



2 PIECE KIT

- 9" Side Cutting Pliers with Dipped Grip Handles (0151-09D) and 6-In-1 Multi Tool (0153-42C) Contains 3/16" and 1/4" Flat Tip, #1 and #2 Phillips and 5/16" and 1/4" Hex
- See individual product information for specifications
- Limited lifetime warranty

CAT. NO.	UPC NO.	DESCRIPTION
0159-42	00763	Dipped Grip 9" Side Cutting Plier, 6-In-1 Tool

GREENLEE®
A Textron Company

GLOVES

- 2 styles of top quality, high dexterity gloves – 2 sizes each
- Light-duty Nitrile dipped gloves for resistance to abrasion, punctures and improved grip
- Fingerless gloves for absolute maximum dexterity and ventilation



Handyman



Tradesman Fingerless



Tradesman

CAT. NO.	UPC NO.	DESCRIPTION
0358-13L	00117	Gloves, Handyman L
0358-13XL	00118	Gloves, Handyman XL
0358-14L	00120	Gloves, Tradesman L
0358-14XL	00121	Gloves, Tradesman XL
06765-10L	00222	Gloves, Tradesman Fingerless L

SAFETY GLASSES

- 7 styles of ANSI compliant eye wear to meet the varied needs and tastes of the trade professional
- 2 models with clear lenses for all-around activities
- 2 sunglass styles for outdoor work
- Amber lens for overcast, low-light conditions
- REVO mirror lens for ultimate style and protection
- Overwrap-style to fit over prescription glasses or for visitors



Tradesman Smoke



Two-Tone Smoke



Tradesman Amber



Pro-View Mirror



Tradesman Clear



Frameless Clear



Overwrap Clear

CAT. NO.	UPC NO.	DESCRIPTION
01762-01C	00181	Safety Glasses, Tradesman, Clear
01762-01S	00196	Safety Glasses, Tradesman, Smoke
01762-03A	00197	Safety Glasses, Tradesman, Amber
01762-04M	00198	Safety Glasses, Pro View, Mirror
01762-05S	00199	Safety Glasses, Two Tone, Smoke
01762-06C	00200	Safety Glasses, Frameless, Clear
01762-07C	00201	Safety Glasses, Over-wrap, Clear

NOTES

GREENLEE®
A Textron Company

GREENLEE MECHANICAL SOLUTIONS
STORAGE & MATERIAL HANDLING







70752

TRIBENCH WITH 6" CHAIN VISE

- **Sturdy, One-Piece Steel Frame** - Easily folds for transport
- **Includes Holes and Slots** - For bending, cutting, or attaching tools
- **Integrated Chain Vise** - Up to 6" pipe capacity
- **Interchangeable Jaws** - Works with Ridgid®* 460 model
- **Ceiling Brace for Overhead Support of the Stand** - Secure frame even during difficult work

CAT. NO.	UPC NO.	DESCRIPTION
70752	70752	Tribench with Chain Vise 1/8" – 6"
70716	70716	Chain Vise 1/4" – 6"

*Ridgid® is a registered trademark of Ridge Tool Co.



467

CHAIN-TYPE PIPE VISE

- Sturdy, one-piece steel frame
- Built-in pipe rest
- To prevent marring of plastic or plastic coated pipe, vise jaws can be rotated with smooth side up – use serrated side for harder materials
- Chain design holds pipe securely to prevent it from twisting or turning during threading

CAT. NO.	UPC NO.	DESCRIPTION
467	27318	Chain-Type Pipe Vise

GREENLEE®
A Textron Company



10640



10641



00100

SUPERJACK PIPE STANDS

- Supports full lengths of pipe, 1/2" – 8", when using pipe threading machines
- Folding stand includes carrying case

SPECIFICATIONS

Height Capacity: 27" - 50"
Weight Capacity: 2,500 lb. Max

CAT. NO.	UPC NO.	DESCRIPTION
10640	91063	Superjack with V-Head, 8"
00101	91064	Superjack with Ball Transfer Head, 8"
10641R	91044	Folding Superjack with V-Head, 8"
10642R	91042	Folding Superjack with Ball Transfer Head, 8"
00100	00100	One Set of Ball Transfer Head
10640-1	10602	Washer for Jackstand
10640-2	10601	Locking Screw Jackstand
10640-3	06403	V-Head Only for Pipe Stand 10640
10640-4	06404	Pipe Stand Sleeve - 10640





70711-42

BENCH YOKE VISE

- Foldable, with automatic closing hook, milled and hardened upper and lower support jaw, powerful smooth-running spindle

SPECIFICATIONS

Pipe Capacity: 1/8" - 4" O.D.

CAT. NO.	UPC NO.	DESCRIPTION
70711	70711	Bench Yoke Vise, 1/8" - 4" O.D.



2460

MADE IN THE USA

STORAGE CHEST

- Recessed and concealed lock protectors for maximum security against drilling and cutting lock
- Finger-groove lid handle for easy opening
- Convenient storage tray on back wall for small items
- Heavy-duty piano hinges with non-removable pin
- Patented, ergonomically designed fold-down recessed handles
- Angled 3-1/2" high support skids feature threaded holes for easy caster installation
- Recommend #1 and #5 Master Lock® padlocks or equivalent
- Made in the USA

Master Lock® is a registered trademark of Master Lock Company LCC.

SPECIFICATIONS

Capacity	20.8 Ft^2
Weight	184 lbs.

CAT. NO.	UPC NO.	DESCRIPTION
2460	23363	Storage Chest
503*	28044	4 Swivel
603*	23405	2 Rigid, 2 Swivel
703**	08420	2 Rigid, 2 Locking Swivel
696*	15341	2 Rigid, 2 Swivel

*Each caster set includes (16) 3/8-16 x 1" self-threading mounting screws
**Each caster set includes (16) 3/8-16 x 1" carriage bolts; (16) 3/8-16 hex nuts; (16) 3/8 lock washers
Note: Screw/washer kit p/n 50062913 is necessary for mounting 703 casters in boxes other than 3548

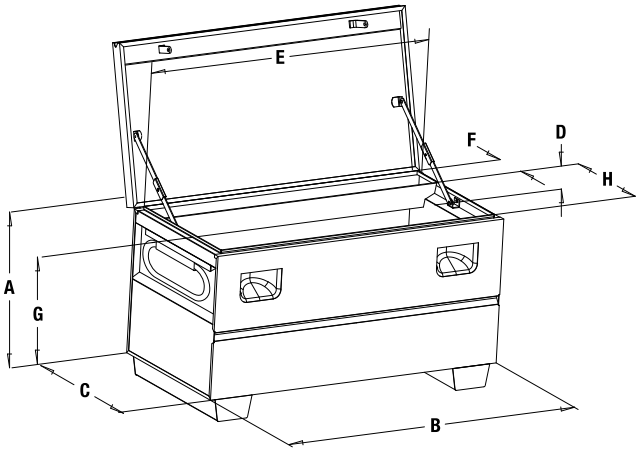

DIMENSIONS

A	B	C	D	E	F	G	H	I
25"	59"	24"	4"	57.5"	4"	19"	15.5"	21.75"

GREENLEE®
A Textron Company



3648

MADE IN THE USA

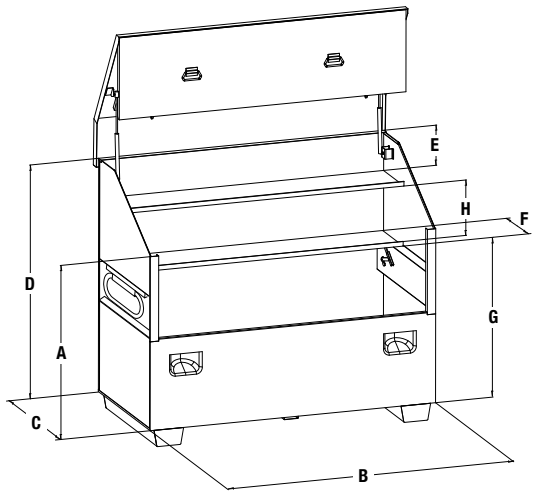

SLANT-TOP BOX

- Large capacity storage with traditional slant-top design
- Recessed and concealed lock protectors for maximum security against drilling and cutting lock
- Channel reinforcements on lid, lock side panels into lid for added security when closed
- Hinged lower shelf enables storage of larger items
- Angled 3-1/2" high support skids feature threaded holes for easy caster installation
- Angled handle recess prevents pinch points
- Features two reinforced steel shelves with large lip to prevent items from rolling off
- Patented, ergonomically designed fold-down recessed handles
- Recommend #1 and #5 Master Lock® padlocks or equivalent
- Made in the USA

Master Lock® is a registered trademark of Master Lock Company LCC.

SPECIFICATIONS

Capacity	34 Ft^2
Weight	270 lbs

CAT. NO.	UPC NO.	DESCRIPTION
3648	23276	Slant-Top Box
503*	28044	4 Swivel
603*	23405	2 Rigid, 2 Swivel
703**	08420	2 Rigid, 2 Locking Swivel
696*	15341	2 Rigid, 2 Swivel

*Each caster set includes (16) 3/8-16 x 1" self-threading mounting screws
**Each caster set includes (16) 3/8-16 x 1" carriage bolts; (16) 3/8-16 hex nuts; (16) 3/8 lock washers
Note: Screw/washer kit p/n 50062913 is necessary for mounting 703 casters in boxes other than 3548

DIMENSIONS

A	B	C	D	E	F	G	H
34"	36"	30"	48"	5"	12"	27"	11"



4872

MADE IN THE USA

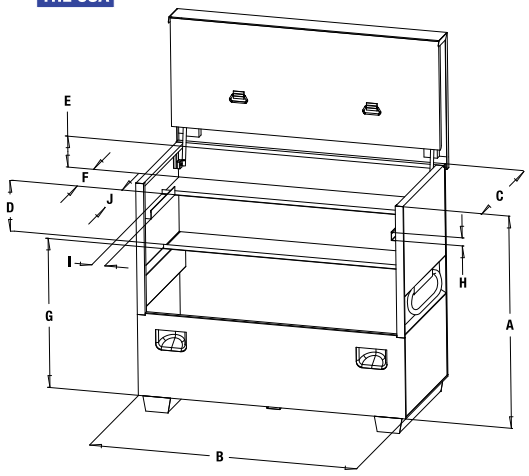

FLAT TOP BOX

- Flat-top design provides more storage capacity for tall, bulky items, and large work surface for jobsite plans
- Recessed and concealed lock protectors for maximum security against drilling and cutting lock
- Channel reinforcements on lid, lock side panels into lid for added security when closed
- Hinged lower shelf allows for easy storage of larger objects
- Side wall storage
- Double hinge cover folds up and out of the way
- Angled 3-1/2" high support skids feature threaded holes for easy caster installation
- Patented, ergonomically designed fold-down recessed handles
- Recommend #1 and #5 Master Lock® padlocks or equivalent
- Made in the USA

Master Lock® is a registered trademark of Master Lock Company LCC.

SPECIFICATIONS

Capacity	60 Ft^2
Weight	373 lbs

CAT. NO.	UPC NO.	DESCRIPTION
4872	07487	Flat-Top Box
503*	28044	4 Swivel
603*	23405	2 Rigid, 2 Swivel
703**	08420	2 Rigid, 2 Locking Swivel
696*	15341	2 Rigid, 2 Swivel

*Each caster set includes (16) 3/8-16 x 1" self-threading mounting screws
**Each caster set includes (16) 3/8-16 x 1" carriage bolts; (16) 3/8-16 hex nuts; (16) 3/8 lock washers
Note: Screw/washer kit p/n 50062913 is necessary for mounting 703 casters in boxes other than 3548

DIMENSIONS

A	B	C	D	E	F	G	H	I	J
48"	72"	30"	11"	7"	12"	27"	2"	3"	17"

GREENLEE®
A Textron Company



5660LH

MADE IN THE USA

UTILITY CABINET

- Recessed and concealed lock protectors for maximum security against drilling and cutting lock
- Flushed-mounted doors
- Finger-groove door handles
- Front-door storage
- Large, lower storage areas for bigger items
- Angled 3-1/2" high support skids feature threaded holes for easy caster installation
- Three 3-1/2" high support skids
- Weather-resistant design
- Open storage for long-handled tools
- Patented, ergonomically designed fold-down recessed handles
- Recommend #1 and #5 Master Lock® padlocks or equivalent
- Made in the USA

Master Lock® is a registered trademark of Master Lock Company LCC.

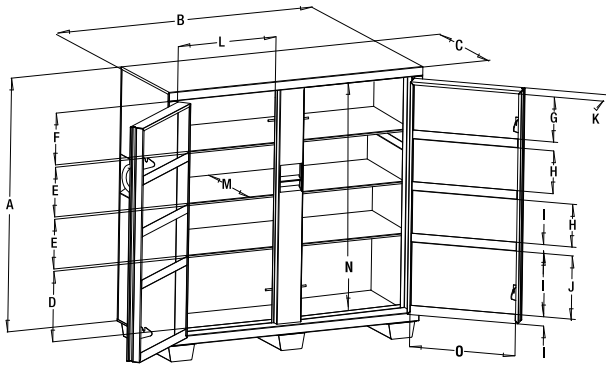

SPECIFICATIONS

Capacity	46 Ft^2
Weight	375 lbs

CAT. NO.	UPC NO.	DESCRIPTION
5660LH	07486	Utility Cabinet
503*	28044	4 Swivel
603*	23405	2 Rigid, 2 Swivel
703**	08420	2 Rigid, 2 Locking Swivel
696*	15341	2 Rigid, 2 Swivel

*Each caster set includes (16) 3/8-16 x 1" self-threading mounting screws
**Each caster set includes (16) 3/8-16 x 1" carriage bolts; (16) 3/8-16 hex nuts; (16) 3/8 lock washers
Note: Screw/washer kit p/n 50062913 is necessary for mounting 703 casters in boxes other than 3548

DIMENSIONS

A	B	C	D	E	F	G	H	I	J	K	L	M	N	O
56"	59"	24"	15"	10.5"	11.5"	10"	10"	2"	14"	3"	23"	20.5"	50.5"	24"



5060MESH

MADE IN THE USA

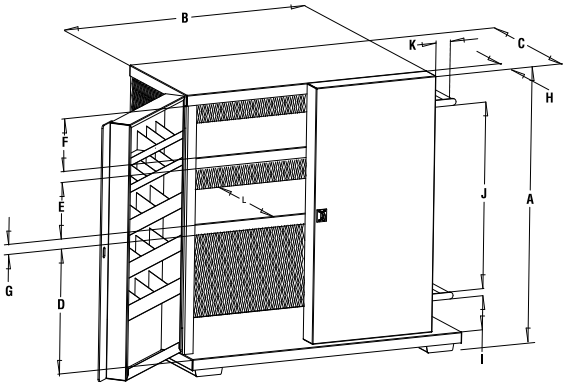

MESH CABINET

- High-visibility mesh screen on three sides
- Forty-eight smaller, individual compartments, enabling storage of smaller tools and accessories
- Platform for long-handle tools
- Sturdy handle for mobility
- Supplied with two swivel casters and two rigid 4" casters for easy mobility
- Recommend #1 and #5 Master Lock® padlocks or equivalent
- Made in the USA

SPECIFICATIONS

Capacity	37.3 Ft^2
Weight	401 lbs

CAT. NO.	UPC NO.	DESCRIPTION
5060MESH	04460	Mesh Cabinet (696 Caster Kit Included)
503*	28044	4 Swivel
603*	23405	2 Rigid, 2 Swivel
703**	08420	2 Rigid, 2 Locking Swivel
696*	15341	2 Rigid, 2 Swivel

*Each caster set includes (16) 3/8-16 x 1" self-threading mounting screws
**Each caster set includes (16) 3/8-16 x 1" carriage bolts; (16) 3/8-16 hex nuts; (16) 3/8 lock washers
Note: Screw/washer kit p/n 50062913 is necessary for mounting 703 casters in boxes other than 3548

DIMENSIONS

A	B	C	D	E	F	G	H	I	J	K	L
52"	48"	28"	22"	10.5"	10"	2"	4"	5"	35"	5.5"	23"

GREENLEE®
A Textron Company



3548

MADE IN THE USA

MOBILE WORKBENCH WITH CHAIN VISE

- Tough composition board work surface on top with built-in chain vise and telescoping wrench stop
- Removable self-stored shelf enables storage of larger items
- Supplied with two locking swivel casters and two rigid 6" casters for easy mobility
- Recessed and concealed lock protectors for maximum security against drilling and cutting lock
- Finger-groove door handles
- Large lower storage areas for bigger items
- Continuous, non-removable hinge pins to prevent theft
- Patented, ergonomically designed fold-down recessed handles
- Recommend #1 and #5 Master Lock® padlocks or equivalent
- Made in the USA

Master Lock® is a registered trademark of Master Lock Company LCC.

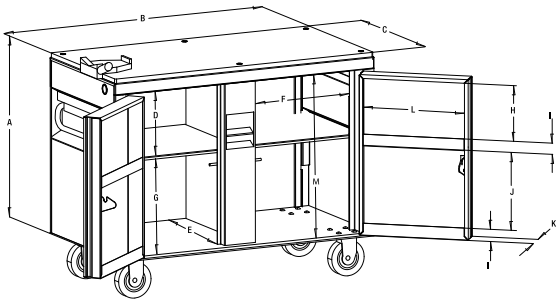

CAT. NO.	UPC NO.	DESCRIPTION
3548	31229	Mobile Workbench with Chain Vise (with 703 Caster Kit)
503*	28044	4 Swivel
603*	23405	2 Rigid, 2 Swivel
703**	08420	2 Rigid, 2 Locking Swivel

*Each caster set includes (16) 3/8-16 x 1" self-threading mounting screws
**Each caster set includes (16) 3/8-16 x 1" carriage bolts; (16) 3/8-16 hex nuts; (16) 3/8 lock washers
Note: Screw/washer kit p/n 50062913 is necessary for mounting 703 casters in boxes other than 3548

DIMENSIONS

A	B	C	D	E	F	G	H	I	J	K	L	M
30"	48"	24"	11"	20.5"	17.5"	15"	9.5"	2"	13"	3"	17"	27"



1230

MADE IN THE USA

WELDER'S BOX

- Protects small tools and supplies and comes with a single lock hasp for use with padlock
- Compact side handles for easy portability
- Heavy-duty hinges, plus chain connector to hold lid in open position
- Recommend #1 and #5 Master Lock® padlocks or equivalent
- Made in the USA

SPECIFICATIONS

Capacity	3.3 Ft^3
Height	12"
Width	30"
Depth	16"
Weight	42 lbs

CAT. NO.	UPC NO.	DESCRIPTION
1230	31510	Welder's Box





7060-CFO

MADE IN THE USA

COMPACT FIELD OFFICE

- Narrow design fits through 36" doorways
- Automatic locking gas spring secures door in upright position
- Weather resistant stripping helps to protect against moisture getting inside the box
- Accommodates up to 55" monitors
- Two-level 45-1/2" x 26-1/2" desk allows recessed use of cable and electronics or storage
- Shrouded padlock guard to improve security
- Cable pass-through holes
- Non-marking 6" casters
- Made in the USA

SPECIFICATIONS

Height with casters	78" (1981mm)
Height without casters	70.5" (1791mm)
Weight with casters	470 lbs (213 kg)
Weight without casters	450 lbs (204kg)

CAT. NO.	UPC NO.	DESCRIPTION
7060-CFO	03964	Compact Field Office

DIMENSIONS

A	B	C	D	E	F	G	H	I
70"	34.5"	54.5"	26.8"	59"	9"	14.6"	23"	30"

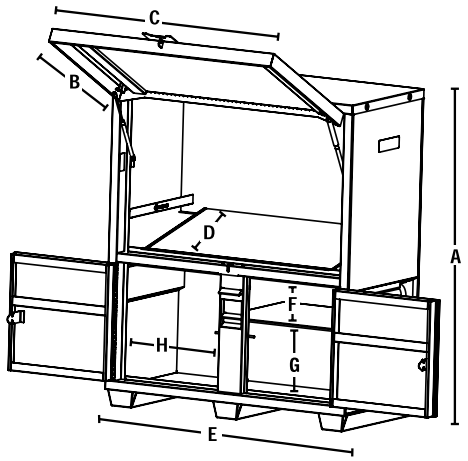

GREENLEE®
A Textron Company



GMX-661K

GMX MATERIAL CART

- Ultimate versatility
- Base rated at 2,500 lbs. load capacity
- Removable handle
- Includes 10" casters
- Size: 57.9" L x 28.3" W x 32.7" H
- 10" casters (2 rigid, 2 swivel)

CAT. NO.	UPC NO.	DESCRIPTION
GMX-661K	02425	GMX Flatbed Cart Kit



GMX-670K

GMX MATERIAL CART

- Carry and store full bundles of conduit and/or pipe
- Designed to fit through standard 36" doorways
- Easily loaded with a forklift – unload at waist height
- Increased load capacity – up to 2,500 lbs.
- Size: 48.1" L x 28.3" W x 36.4" H
- 8" casters (2 rigid, 2 swivel)

CAT. NO.	UPC NO.	DESCRIPTION
GMX-670K	02421	GMX Material Bundler Cart Kit

REPLACEMENT PARTS

CAT. NO.	UPC NO.	DESCRIPTION	MODEL
CR6	02428	6" Rigid Caster (One Caster)	7060-CFO
CS6	02429	6" Swivel Caster (One Caster)	7060-CFO
CS8	01853	8" Swivel Caster with Brake (One Caster)	GMX-670K
CRT10	01843	10" All Terrain Rigid Caster (One Caster)	GMX-661K
CST10	01847	10" All Terrain Swivel Caster (One Caster)	GMX-661K
GMX-670	01835	Material Bundler Attachment Set	GMX-670K
GMX-661	01833	Flatbed Attachment Set	GMX-661K
GMX	01832	GMX Multi-Purpose Base	GMX-670K & GMX-661K

NOTES

GREENLEE®
A Textron Company

ALPHABETICAL PRODUCT

A

AC Clamp-On Meter 66
Additional Cutters 6, 9
Adjustable Non-Contact Voltage Detector 62
Aluminum Led Flashlights 103
Automatic Electrical Tester 61
Automatic Opening Pipe Die Heads & Dies 51
Automatic Opening Pipe Heads & Dies 47
Automatic Ratchet Telescopic Pipe Cutter 4

B

Bench Yoke Vise 113
Bit Extension 20
Bolt Threads, 2SE & 50R 50
Bucket Oiler 46
Bulb Auger 77

C

Canvas Zipper Bag, 12" 105
Carbide Tipped Hole Cutters 21
Carbide-Grit Hole Saw - 1-3/8" 21
Carbide-Tipped Cutters 77
Chain Pipe Wrench, 4" 84
Chain-Spinning Heads with Spike 75
Chain-Type Pipe Vise 112
Collins 44A 4" THREAD-O-MATIC™ 43
Collins 66A 6" THREAD-O-MATIC™ 44
Collins Classic 22A 42
Collins E-Z Cutter™ 11
Collins® Classic 22A 47, 48
Combination Drill/Tap Bits 20
Combination Ratcheting Wrenches - Fractional 96
Combination Ratcheting Wrenches - Metric 97
Combination Ratcheting Wrench Set - Fractional, 7-Piece 96
Combination Ratcheting Wrench Set - Metric, 7-Piece 97
Compact Field Office 120
Crimping Combination Tool 86
Crimping/Stripper Combination Tool 88
Cross-Blade Cutter, Serrated 75

D

D'VERSIBIT® 20
Deburring Tools 7
Diagonal Cutting Pliers 81
Die Heads & Dies UNIQUAD™ Bolt Die Heads & Dies, 66A 51
Digital Multimeter 64
Dipped Handle Adjustable Wrench 98
Drain Cleaning Machine 74

E

Electrical Testers 61
ESM™ Industrial 500,000-Count Digital Multimeter 63
ESM™ Series Digital Multimeters 64

F

Flame Reflector 55
Flat Top Box 116
Folding Ball-End Hex-Key Set - Standard, 9-Piece 99
Folding Hex-Key Set - Standard, 5-Piece 99
Folding Hex-Key Set - Standard, 9-Piece 99
Freeze-Pak 70
Funnel Auger 77

G

Gator® Battery-Powered Bolt Cutter 11
Gloves 109
GMX Material Cart 121
Grease Cutter 76
Greenlee Bi-Metal Blades 12
Greenlee Extreme™ Blade 12
Greenlee Extreme™ Ti-Metal™ Blades 12
Grooving & Beveling Die Heads & Tools 52

H

Heavy-Duty Aluminum Offset Pipe Wrench 84
Heavy-Duty Aluminum Pipe Wrench 83
Heavy-Duty Chain Pipe Wrench 84
Heavy-Duty Steel Offset Pipe Wrench 83
Heavy-Duty Steel Pipe Wrench 83
Heavy-Duty Cabinet Tip Screwdriver 91
Heavy-Duty Hack Saw 14
Heavy-Duty Keystone Tip Screwdriver 91
Heavy-Duty Multi-Pocket Bag, 18" 104
Heavy-Duty Nut Drivers 95
Heavy-Duty Phillips Tip Screwdriver 92
High Leverage Side-Cutting Pliers 81
HVAC True RMS Clamp Meter 66
Hydraulic Bender 26

I

Installation Kit, 5-Piece 107
Internal/External Deburring Tools 7

K

Keyhole/Jaw Saw 14
Kibosh - Emergency Pipe Repair 72
Kit, 2 Piece 108
Kit, 4-Piece 108
Kit, 6-Piece 107
Kwik Stepper® Step Bits 19

L

Long Nose Side Cutting & Stripping Pliers 82

M

Map-Pro® & Propane Gas 56
MAXIBENDER 27
Mesh Cabinet 118
Mini Magnetic Bubble Level 101
Mini Max Pipe Cutter 5
Mini Screwdriver Set 90
Mini-Magnet Laser Level 101
Mobile Workbench with Chain Vise 119
Multi-Tool Driver, 6-in-1 90
Multi-Tool Driver, 9-Piece 90
Nipple Chucks 44

N

Non-Contact Voltage Detector 62
Nut Driver Set, 7-Piece 94

P

PEX Hand Crimpers 35
Pipe Cutter 5
Plastic Pipe Cutter 9
Plumber's 7-Piece Repair Kit 85
Pocket Multimeter 65
Power-Return Tape Measures 102
Precision Die Heads For SUPERTRONIC™ 2000 47
Pro Stainless Steel Wire Strippers/Cutters/Crimpers 87
Professional Pocket Knives 100
Pump Pliers, 12" 80
PVC Cutter Replacement Parts 9
PVC Saw 14

Q

Quick Change Carbide Tipped Hole Cutters 21
Quick Change Hole Saw Kits 22
Quick Change Hole Saws 23
Quick Draw® Hydraulic Punch Driver Kit 17

R

Ratchet Pipe Reamer 46
Reciprocating Saw Blades 12, 13
Replacement Parts 6
Replacement Parts 121
Replacement Parts, LS100 16
Retrieving Auger 76
RHINO™ 43
RHINO™, 4SE, 2SE, & 1SE 49
RIDGID® Style Universal 49
ROBEND™ 3000 28
ROCONNECT® Compact 34
ROCONNECT® Cordless 35
ROCUT® 110 & 160 10
ROCUT® GC 4, 8, & 12 10
ROCUT® 26TC 8
ROCUT® 63TC 8
ROCUT® Pro 42TC 8
ROFIRE Hand Torch 54
ROFIRE Swivel Torches 55
ROFLARE® 31
ROFROST™ Co_2 Set 70
ROFROST™ Turbo 2" 71
ROGROOVER 2"-12" 45
ROGROOVER 6" 45
RONOL Spray Oil 46
ROSPI™ H+E Plus 74
ROTHERM 2000 56
ROTRAC® 28 5
ROWELD™ P 160 57
ROWELD™ P 160 B, P 250 B, & P 355 B 57
ROWELD™ P 63 S-6 57

S

Safety Glasses 109
SANIGRIP PL Plier 85
Scratch Awl 94
Screwdriver Set, 5-Piece 89
Screwdriver Set, 7-Piece 89
Self Testing Non-Contact Voltage Detector 63
Self-Feeding Spade Bits 20
Serrated Forked Cutter 75
Slant-Top Box 115

ALPHABETICAL PRODUCT

S

Slug Splitter® Knockout Punches 17
Slug-Buster® Knockout Kit with Hydraulic Hand Pump 17
SNAP-O-MATIC™ Bolt Die Heads & Dies 52
Soldering & Brazing Torches 55
Spade-Head Cutter 77
Speed Punch® Kits, LS100 16
Spiral Sawtooth Cutter 76
Square-Recess Tip Driver Set, 4-Piece 93
Square-Recess Tip Drivers 93
Stainless Steel Pipe Cutter 5
Stainless Steel Tube Cutter, 35 Pro 5
Stainless Steel Wire Strippers/Crimping Combination Tool 88
Stainless Steel Wire Strippers/Cutters 87
Standard Basin Nut Wrench 85
Standard Two-Handed Bender 28
Starter Tool Kit 108
Step Bits 19
Storage Chest 114
Straight Auger 76
Strap & Fitting Wrench 84
Stubby Screwdriver 92
Stubby Square-Recess Tip Driver 94
Stud Punches 18
Super Cut Deluxe Threading Kit 38
Super Cut Ratchet Threader 38
Super Fire 3 54
Superjack Pipe Stands 113
SUPERTRONIC™ 2SE 40
SUPERTRONIC™ 4SE 41
SUPERTRONIC™ 2000 39
Sweatbox™ II 55

T

T-Handle Hex Key Drivers 98
Tee-Extractor Set 31
Telescopic Basin Nut Wrench 85
Test Pump, RP50-S 60
THREAD-O-MATIC & SNAP-O-MATIC® Pipe Die Heads & Dies, 66A 51
THREAD-O-MATIC™ & SNAP-O-MATIC™ Pipe Die Heads & Dies, 44A 50
THREAD-O-MATIC™ & SNAP-O-MATIC™ Pipe Die Heads & Dies, 66A 51
Threaded Rod Cutter 101
Threading/Cutting Oil 46
Tool Bag, 20" 104
Tool Carrier with Parts Bin, 16" 105
Tool Kit - Metric, 16-Piece 107
Tool Kit - Standard, 12-Piece 106
Tool Kit, 28-Piece 106
Torpedo Level 102
Tribench With 6" Chain Vise 112
Tube Bender 27
Tube Cutter, 35 Pro 4
Two-Way Root Cutter 75

U

Ultra Cutters 22
UNIQUAD™ & SNAP-O-MATIC™ Bolt Die Heads & Dies, 44A 50
UNIQUAD™ Pipe Die Heads & Dies 48
UNIQUAD™ Pipe Die Heads & Dies, 66A 51
Universal "R" Series Die Head Dies 49
Utility Cabinet 117
Utility Knife 100

W

Water Pump Pliers/Rolock™ Pliers 80
Welder's Box 119
Wrench Knockout Kits 18

ALPHANUMERIC BY CATALOG/UPC NUMBER

CM-410 66
CMH-600 66
CMH-1000 66
CMI-1000 65
CMT-80 61
CR6 121
CRT10 121
CS6 121
CS8 121
CS-8000 67
CST10 121
DM-65 64
DM-810A 64
DM-860A 63
DTAPKIT 20
E-239 41
EAC18120 16
ESP710L11 18
ETS12L11 11
ETS12L12 11
ETS12L22 11
ETS12L120 11
ETS12L230 11
ETS12LB 11
FL2AA 103
FL2D 103
GMX 121
GMX-661 121
GMX-661K 121
GMX-670 121
GMX-670K 121
GT-12A 62
GT-16 62
GT-65 61
GT-95 61
HB.9864 11
KK50LGL 11
KK100LFLEX 16
KP1022 86
KP1022D 86
L77 101
L97 101
L107 102
LDTAPKIT 20
LS100L11A 16
LS100L11SB 16
LS100L11SB4 16
LS100L11SB4SP 16
LS100L11SBSP 16
LS100L11SS 16
LS100L11SS4 16
LS100L11SSSP 16
LS100LB 16
P00551C 43
P20023 55
P70045C 6
P70159C 83
P70160C 83
P70161C 83
P70162C 83
P70905C 38
P71259C 39
PDMM-20 65
R01850 44
R11106R 57
R11127R 57
R11245R 57
R50009R 46
R54001R 57
R55035R 10
R55063R 10
R55838R 57
R211501R 10
R211502R 10
R211503R 10
R211512R 10
R211522R 10
R211532R 10
R04270753R 46
TC-5 ..... 61, 66
TC-10 66
TC-20 ..... 63, 64
TC-30 ..... 65, 66
TG-1000 67
TG-2000 67
TPB 63, 64
TR-12A 62
TSG-3 64
TSG-3 ..... 61, 63, 64

NUMERIC BY CATALOG/ UPC NUMBER

00004 48
00005 48
00006 48
00007 48
00008 48
08-03-54A 20
08-03-72A 20
00009 48
00010 ..... 48, 50
00011 ..... 48, 50
00012 ..... 48, 49, 50
12-04-54A 20
12-04-72A 20
00013 ..... 48, 50
00014 ..... 48, 50
00015 ..... 48, 50, 51
00016 ..... 48, 50, 51
00017 ..... 48, 50, 51
00018 ..... 48, 50, 51
00019R 48, 50, 51
00020R 48, 50, 51

GREENLEE®
A Textron Company

NUMERIC BY CATALOG/UPC NUMBER

00021R 48, 50, 51
00022 ..... 48, 50, 51
00023 ..... 47, 48, 51
00024 ..... 47, 48, 51
00025 48
00026 48
00027 ..... 47, 48
00028R 47, 48, 51
00029 ..... 47, 56
00030 47
00031R 47
00032 11
00033 11
34AR-6 20
00034R 11
00035R 11
00036R 11
00037 11
00039 43
00045 42
00050 48
00051 48
00052 48
00053 ..... 47, 48, 51
00054 ..... 47, 48, 51
00057 100
00058 100
00059 100
00061 ..... 47, 100
00062 ..... 47, 100
00063 47
00064 47
00065 47
00066 47
00069 11
00071 11
00072 44
00073 44
00079 11
00084 88
00089 44
00097 43
00098 44
00100 113
00101 113
00103 67
00104 ..... 43, 44, 67
00105 43
00106 43
00107 43
00113 14
00117 109
00118 109
00120 109
00121 ..... 49, 109
00125 49
00126 49
00131 38
00132 83
0151-08D 81
0151-08M 81
0151-09CM 81
0151-09D 81
0151-09M 81
0151-09SM 81
0153-01C 89
0153-02C 89
0153-03C 90
0153-04C 92
0153-11C 91
0153-12C 91
0153-13C 91
0153-14C 91
0153-15C 91
0153-16C 91
0153-21C 91
0153-22C 91
0153-23C 91
0153-24C 91
0153-25C 91
0153-26C 91
0153-27C 91
0153-28C 92
0153-31C 92
0153-32C 92
0153-33C 92
0153-34C 92
0153-35C 92
0153-36C 92
0153-42C 90
0153-43C 90
00154 42
0154-08D 98
0154-10D 98
0154-12D 98
0155-7MA 102
0155-25A 102
00157 42
00158 42
0158-11 104
0158-12 104
0158-14 105
0158-19 105
0159-11 106
0159-13 106
0159-14 108
0159-24 107
0159-28 108
0159-34 107
0159-36 107
0159-42 108
00174 44
00181 109
00184 44
00186 44
00187 44
00188 44
00189 44
00191 44
00191R 44
00196 109
00197 109
00198 109
00199 109
00200 ..... 47, 109
00203 47
00206 ..... 4, 5, 6
00217 49
00218 49
00219 49
00221 ..... 47, 51
00222 ..... 48, 50, 51, 109
00225 47
00226R 47
00227R 47
00230 40
0251-06D 81
0251-06M 81
0251-07M 81
0251-08AD 81
0251-08AM 81
0251-08D 81
0251-08M 81
0253-01C 94
0253-11C 95
0253-12C 95
0253-13C 95
0253-14C 95
0253-15C 95
0253-16C 95
0253-17C 95
0253-33C 95
0253-34C 95
0253-35C 95
0253-36C 95
0253-37C 95
0253-38C 95
0253-39C 95
0253-41C 95
0253-42C 95
0253-43C 95
0254-11 99
0254-12 99
0254-40 98
0254-42 98
0254-43 98
0254-44 98
0254-45 98
0254-46 98
0254-47 98
0254-48 98
0254-49 98
0254-50 98
0254-51 98
00300 ..... 47, 48
301A 14
00301R 47, 48, 51
00302 47
00302R 47
322-013 14
00330 50
00331 50
00332R 50
333-1218 14
333-1224 14
333-1232 14
333A 14
00339 64
00341 48
00342 48
00344R 48
00345R 48
00346R 48, 50
00347R 48, 50
00348R 48, 50

NUMERIC BY CATALOG/UPC NUMBER

00349R 48, 50
0351-06M 82
0351-07D 82
0351-08M 82
0351-08SD 82
0351-08SM 82
00351R 48, 50, 51
00352 ..... 48, 50, 51
0353-01C 93
0353-02C 94
0353-11C 93
0353-12C 93
0353-13C 93
0353-14C 93
0353-21C 93
0353-22C 93
0353-23C 93
0353-24C 93
0353-32C 94
0353-33C 94
353-110 13
353-123 13
353-156 13
353-414 13
353-610 13
353-610G 12
353-614 13
353-614G 12
353-618 13
353-618G 12
353-618RS 13
353-624 13
353-624G 12
353-635 13
353-636 13
353-646 13
353-656 13
353-656G 12
353-800RDG 13
353-804 13
353-810 13
353-810G 12
353-814 13
353-818 13
353-818G 12
353-835 13
353-956 13
353-969 13
353-6114 12
353-6118 12
353-6563 13
353-9114 12
353-9118 12
0354-01 96
0354-02 97
0354-11 96
0354-12 96
0354-13 96
0354-14 96
0354-15 96
0354-16 96
0354-17 96
0354-18 96
0354-19 96
0354-20 96
0354-21 96
0354-22 96
0354-23 96
0354-24 96
0354-25 96
0354-26 96
0354-51 97
0354-52 97
0354-54 97
0354-56 97
0354-59 97
0354-60 97
0354-61 97
0354-63 97
0354-64 97
00355 ..... 8, 9
0358-13L 109
0358-13XL 109
0358-14L 109
0358-14XL 109
0451-10D 80
0451-10M 80
0451-12D 80
0451-12M 80
0451-16D 80
462-1 46
462-Q 46
463-1 46
463-Q 46
467 112
00470R 52
00471R 52
00472R 52
00473R 52
00474R 52
00475R 52
00476R 52
00477R 52
00478R 52
00479R 52
00480R 52
00482R 52
00483R 52
00484R 52
00486 52
00487R 52
00488R 52
00489 52
00490 52
503 ..... 114, 115, 116, 117, 118, 119
00533 11
00534 11
00535 11
00548 43
00550 43
00552 43
00561R 43
00574 52
00574R 52
00575 ..... 42, 52
00579R 42
00585R 42
00592R 42
00596R 42
00597 42
603 ..... 114, 115, 116, 117, 118, 119
635 21
0652-11 100
0652-24 100
0652-25 100
0652-26 100
0652-28 100
0652-29 100
660 21
696 ..... 114, 115, 116, 117, 118
703 ..... 114, 115, 116, 117, 118, 119
00704 ..... 5, 6
713 18
00716 6
725-1-3/8 21
00754 ..... 4, 5, 6, 7
00763 108
825-1 23
825-1-1/2 23
825-1-1/4 23
825-1-1/8 23
825-1-1/16 23
825-1-3/4 23
825-1-3/8 23
825-1-3/16 23
825-1-5/8 23
825-1-5/16 23
825-1-7/8 23
825-1-7/16 23
825-1-9/16 23
825-1-11/16 23
825-1-13/16 23
825-2 23
825-2-1/2 23
825-2-1/4 23
825-2-1/8 23
825-2-1/16 23
825-2-3/4 23
825-2-3/8 23
825-2-5/8 23
825-2-5/16 23
825-2-7/8 23
825-2-9/16 23
825-3 23
825-3-1/2 23
825-3-1/4 23
825-3-1/8 23
825-3-3/4 23
825-3-3/8 23
825-3/4 23
825-3-5/8 23
825-3-7/8 23
825-4 23
825-4-1/2 23
825-4-1/4 23
825-4-1/8 23
825-4-3/4 23
825-4-3/8 23
825-5 23
825-5-1/2 23
825-5/8 23
825-6 23
825-7/8 23
825-9/16 23
825-11/16 23

GREENLEE®
A Textron Company

NUMERIC BY CATALOG/UPC NUMBER

825-13/16 23
825-15/16 23
830 22
830Q 22
835 85
862 9
864 ..... 8, 9
865 9
00870 28
881CT 26
884E980 26
885E980 26
889 22
890 ..... 22, 62
891 22
00909 20
930 22
01050 45
01139 11
01219 28
01222 28
01223 28
1230 119
01278 39
01301 46
01553 46
01623 42
01762-01C 109
01762-01S 109
01762-03A 109
01762-04M 109
01762-05S 109
01762-06C 109
01762-07C 109
01832 121
01833 121
01835 121
01843 121
01847 121
01850 44
01853 121
1923A 88
1927-SS 88
02155 86
02187 65
02209 66
02231 66
02243 88
2266 9
02350 11
02421 121
02425 121
02428 121
02429 121
2460 114
02537 9
02538 9
02640 55
02714 ..... 65, 66
02724 74
02733 62
02806 22
03138 16
03141 16
03142 16
03143 16
03145 16
03148 16
03150 16
03151 16
03363 39
03384 16
03388 16
03412 28
03413 28
03478 22
03479 22
03480 22
3548 119
03582 101
03583 102
03599 21
3648 115
03664 55
03673 45
03710 20
03964 120
04253 8
04460 118
04510 41
04510R 41
4872 116
05031 34
5060 118
05112 10
5660LH 117
05740 27
05766 21
05789 19
05790 19
05792 19
05793 19
06107 83
06403 113
06404 113
06430 18
06765-10L 109
7060-CFO 120
07125 39
7238SB 18
7310SB 17
07486 117
07487 116
7506 17
07534 66
07535 ..... 63, 64
07536 ..... 65, 66
07588 ..... 61, 66
07592 ..... 63, 64
07671 7
7706SB 17
07735 61
7806-SB 17
7906SB 17
07978 9
07982 9
07987 9
08375 18
08377 18
08379 18
08420 ..... 114, 115, 116, 117, 118, 119
08743 64
09025 61
09027 61
9753-12C 94
09865 9
9952-11 100
9953-13 90
9953-15 90
10001 11
10007 ..... 5, 6
10018 11
10025 11
10032 11
10037 14
10038 14
10039 14
10049 11
10054 67
10056 11
10057 67
10063 11
10075 21
10087 11
10094 11
10100 11
10117 11
10124 11
10131 11
10187 107
10191 108
10214 22
10476 17
10601 113
10602 113
10628 90
10633 86
10640 113
10640-1 113
10640-2 113
10640-3 113
10640-4 113
10641R 113
10642R 113
11006 ..... 7, 30
11006R 7, 30
11006X 7
11008 30
11035 30
11052 30
11053 30
11054 30
11055 30
11056 30
11057 30
11058 30
11062 30
11106 57
11127 57
11245 57
11372 61
11617 101
11689 65
12000 30
12034 ..... 61, 63, 64

NUMERIC BY CATALOG/UPC NUMBER

12126 ... 67
12318 ... 30
12324 ... 30
12425 ... 35
12426 ... 35
12427 ... 35
12428 ... 35
12477 ... 102
12479 ... 102
12727 ... 62
12849 ... 67
12850 ... 67
12851 ... 67
12852 ... 67
12853 ... 67
12938 ... 63
13388 ... 105
13438 ... 90
13488 ... 81
13490 ... 90
13491 ... 92
13494 ... 103
13497 ... 103
13499 ... 98
13500 ... 98
13501 ... 98
13502 ... 98
13503 ... 98
13504 ... 98
13505 ... 98
13506 ... 98
13507 ... 98
13517 ... 96
13518 ... 96
13519 ... 96
14486 ... 35
14487 ... 35
15031V ... 34
15032 ... 34
15032V ... 34
15033 ... 34
15033V ... 34
15034 ... 45
15222 ... 35
15222X ... 35
15223 ... 35
15223X ... 35
15224 ... 35
15224X ... 35
15225 ... 35
15225X ... 35
15226 ... 35
15226X ... 35
15227 ... 35
15227X ... 35
15251 ... 35
15251X ... 35
15252 ... 35
15252X ... 35
15253 ... 35
15253X ... 35
15254 ... 35
15254X ... 35
15255 ... 35
15255X ... 35
15256 ... 35
15256X ... 35
15341 ... 114, 115, 116, 117, 118
15930 ... 34
15931 ... 34
15932 ... 34
15933 ... 34
15934 ... 34
15935 ... 34
16001 ... 34
16002 ... 34
16101 ... 35
16102 ... 35
16107 ... 83
16530 ... 4, 5, 6, 7
17620 ... 20
19131 ... 23
19132 ... 23
19133 ... 23
19134 ... 23
19135 ... 23
19136 ... 23
19137 ... 23
19138 ... 23
19140 ... 23
19141 ... 23
19143 ... 23
19144 ... 23
19145 ... 23
19146 ... 23
19147 ... 23
19148 ... 23
19149 ... 23
19150 ... 23
19151 ... 23
19152 ... 23
19153 ... 23
19154 ... 23
19155 ... 23
19157 ... 23
19158 ... 23
19159 ... 23
19160 ... 23
19161 ... 23
19162 ... 23
19163 ... 23
19164 ... 23
19165 ... 23
19166 ... 23
19167 ... 23
19168 ... 23
19169 ... 23
19170 ... 23
19171 ... 23
19172 ... 23
19174 ... 23
19175 ... 23
19176 ... 23
19177 ... 23
19178 ... 23
19179 ... 23
19180 ... 23
19181 ... 23
19182 ... 23
19183 ... 23
19184 ... 23
19192 ... 22
20007 ... 5, 6
20023 ... 55
20160 ... 50
20162 ... 50
20172 ... 49
20172R ... 49
20521 ... 28
20533 ... 42
20958 ... 82
21006 ... 7
21143 ... 10
21150 ... 10
21151 ... 10
21152 ... 10
21153 ... 10
21575 ... 31
21652 ... 4, 5, 6, 7
21652B ... 4, 5, 6, 7
21655 ... 7
21660 ... 7
22016 ... 31
22035 ... 31
22038 ... 31
22061 ... 31
22062 ... 31
22063 ... 31
22064 ... 31
22065 ... 31
22066 ... 31
22068 ... 31
22080 ... 31
22081 ... 31
22124 ... 31
23001 ... 27
23010 ... 27
23011 ... 27
23012 ... 27
23013 ... 27
23014 ... 27
23022X ... 27
23064 ... 27
23276 ... 115
23363 ... 114
23405 ... 114, 115, 116, 117, 118, 119
23635 ... 14
23641 ... 14
24002 ... 27
24006 ... 27
24008 ... 27
24130 ... 27
24134 ... 27
25001 ... 28
25120 ... 28
25131 ... 28
25136 ... 28
25616 ... 28
25619 ... 28
25622 ... 28
25625 ... 28
25626 ... 28
25652R ... 28
25752 ... 11
25913 ... 28

GREENLEE®
A Textron Company

NUMERIC BY CATALOG/UPC NUMBER

25914 ... 28
26022 ... 31
26032 ... 31
26033 ... 31
26034 ... 31
26036 ... 31
26038 ... 31
26039 ... 31
26096 ... 46
26710 ... 30
26711 ... 30
26715 ... 30
27318 ... 112
28044 ... 114, 115, 116, 117, 118, 119
28237 ... 46
28238 ... 46
28239 ... 46
30008C ... 19
30385 ... 17
31043 ... 55
31043R ... 55
31229 ... 119
31287 ... 26
31400 ... 107
31510 ... 119
32054 ... 41
34209 ... 26
34210 ... 26
34293 ... 17
34300 ... 17
34361 ... 17
34401C ... 19
34403C ... 19
34757 ... 18
35012 ... 55
35014 ... 55
35415 ... 54
35415R ... 54
35431 ... 54
35431R ... 54
35455 ... 55
35456 ... 55
35457 ... 55
35458 ... 55
35459 ... 55
35884 ... 19
35884C ... 19
36587 ... 101
36687 ... 18
36701 ... 56
36710 ... 56
36711 ... 56
36720 ... 56
36721 ... 56
37155 ... 23
37156 ... 23
37157 ... 23
37186 ... 101
37187 ... 101
38073 ... 20
38074 ... 20
38083 ... 20
38084 ... 20
38522 ... 23
38526 ... 23
40231 ... 85
45001 ... 42, 45
45002 ... 45
45004 ... 43, 45
45225R ... 56
47745 ... 49
47750 ... 49
47760 ... 49
47765 ... 49
47770 ... 49
47780 ... 49
47785 ... 49
47790 ... 49
50009 ... 46
50010 ... 56
50010R ... 56
50012 ... 56
50012R ... 56
52000 ... 8, 9
52005 ... 8, 9
52010R ... 9
52011 ... 9
52015 ... 9
52016 ... 9
52030 ... 8
52030R ... 8, 9
52031 ... 8, 9
52040 ... 9
52041 ... 9
52042 ... 8, 9
52091 ... 49
52134 ... 11
52135 ... 11
52136 ... 11
52137 ... 11
52138 ... 11
52165 ... 18
52176 ... 16
52177 ... 11, 16
52178 ... 11, 16
52179 ... 11
52180 ... 11, 16
52191 ... 16
52500 ... 41, 49
54001 ... 57
54644 ... 91
54645 ... 91
54646 ... 91
54647 ... 91
54648 ... 92
54649 ... 91
54650 ... 91
54651 ... 91
54652 ... 91
54653 ... 91
54654 ... 91
54655 ... 91
54656 ... 92
54657 ... 92
54658 ... 92
54659 ... 92
54660 ... 92
54661 ... 89
54664 ... 95
54665 ... 95
54666 ... 95
54667 ... 95
54668 ... 95
54669 ... 95
54670 ... 95
54671 ... 94
54688 ... 93
54689 ... 93
54691 ... 93
54693 ... 93
54695 ... 93
54697 ... 94
54701 ... 81
54702 ... 81
54707 ... 80
54709 ... 80
54717 ... 82
54718 ... 82
54719 ... 82
54729 ... 100
54737 ... 81
54738 ... 81
54739 ... 81
54740 ... 81
54744 ... 80
55035 ... 10
55054D ... 6
55063 ... 10
55316 ... 18
55482 ... 99
55494 ... 96
55495 ... 96
55496 ... 96
55497 ... 96
55498 ... 96
55499 ... 96
55500 ... 96
55501 ... 96
55838 ... 57
56025 ... 49
56265 ... 49
56288 ... 11
56301 ... 100
56303 ... 89
56304 ... 91
56305 ... 91
56308 ... 90
56310 ... 90
56323 ... 99
56334 ... 104
56335 ... 104
56338 ... 105
56349 ... 106
56351 ... 106
56352 ... 108
56383 ... 49
56511 ... 40, 45
56512 ... 41, 45
57006 ... 6
57014 ... 6
57040 ... 6
57101 ... 6
58182 ... 28, 74
59000 ... 9
59001 ... 9

NUMERIC BY CATALOG/UPC NUMBER

59060 ... 9
59070 ... 9
59080 ... 9
59912 ... 41, 49
60200 ... 60
60201 ... 60
60250 ... 60
60250R ... 60
60251 ... 60
62202 ... 71
62205 ... 71
62211 ... 71
62214 ... 71
62215 ... 71
62216 ... 71
62217 ... 71
62219 ... 71
62224 ... 71
62226 ... 71
62227 ... 71
62230 ... 71
62231 ... 71
62232 ... 71
62233 ... 71
62234 ... 71
62235 ... 71
62236 ... 71
62237 ... 71
63004 ... 40
63005 ... 40
63006 ... 41
63090 ... 50
64001 ... 70
64002 ... 70
64004 ... 70
64401 ... 41, 49
65008 ... 46
65013 ... 46
65035 ... 70
65036 ... 70
65037 ... 70
65038 ... 70
65039 ... 70
65040 ... 70
65041 ... 70
65042 ... 70
65043 ... 70
65044 ... 70
70007B ... 5, 6
70007X ... 5, 6
70010 ... 5
70011 ... 6
70012 ... 6
70013 ... 6
70014 ... 5, 6
70015 ... 5
70017 ... 4, 5, 6
70017B ... 4, 5, 6
70017D ... 4, 5, 6
70018 ... 6
70020 ... 6
70021 ... 6
70027 ... 4
70028 ... 6
70028D ... 6
70029 ... 6
70030 ... 4
70031 ... 6
70032 ... 6
70040 ... 5
70045 ... 6, 39
70046 ... 5, 6
70046D ... 5, 6
70051 ... 6
70051D ... 6
70054 ... 6
70055 ... 5
70056 ... 5, 6
70056D ... 5, 6
70057 ... 6
70057D ... 6
70060 ... 6
70061 ... 6
70061D ... 6
70065 ... 6
70070 ... 6
70075 ... 7
70086 ... 5
70087 ... 6
70088 ... 5, 6
70089 ... 6
70105 ... 6
70109 ... 6
70115 ... 84
70116 ... 84
70142 ... 6
70143 ... 6
70159 ... 83
70160 ... 83
70161 ... 83
70162 ... 83
70163 ... 83
70164 ... 83
70166 ... 83
70167 ... 83
70188 ... 6
70225 ... 85
70226 ... 85
70235 ... 84
70236 ... 85
70240 ... 84
70241 ... 84
70243 ... 84
70244 ... 84
70245 ... 84
70246 ... 84
70285 ... 6
70286 ... 6
70289 ... 46
70296 ... 46
70401 ... 6
70402 ... 6
70416 ... 85
70417 ... 85
70521 ... 80
70522 ... 80
70523 ... 80
70614 ... 38
70615 ... 85
70711 ... 113
70716 ... 112
70752 ... 39, 112
70753 ... 46
70840X ... 38
70901 ... 38
70901X ... 38
70903 ... 38
70903X ... 38
70905 ... 38
70905X ... 38
71019 ... 6
71068 ... 42
71259 ... 39
71259L ... 39
71271 ... 39
71272 ... 38
71273 ... 38, 39
71280 ... 39
72095 ... 74
72101 ... 74
72110 ... 74
72111 ... 74
72112 ... 74
72161 ... 76
72162 ... 76
72163 ... 77
72165 ... 77
72166 ... 76
72169 ... 76
72170 ... 76
72186 ... 75
72191 ... 77
72203 ... 76
72221 ... 76
72222 ... 77
72229 ... 76
72234 ... 76
72250 ... 75
72261 ... 77
72263 ... 77
72265 ... 75
72275 ... 75
72278 ... 75
72291 ... 77
72321 ... 76
72322 ... 77
72325 ... 76
72329 ... 76
72347 ... 75
72350 ... 75
72360 ... 77
72363 ... 77
72365 ... 75
72374 ... 75
72392 ... 77
72412 ... 74
72431 ... 74
72441 ... 74
72451 ... 74
72541 ... 74
72638 ... 74
72676 ... 74
72869V ... 74
73420 ... 66
80007 ... 72

GREENLEE®
A Textron Company

NUMERIC BY CATALOG/UPC NUMBER

80012 ... 72
80280 ... 28
88737 ... 45
88738 ... 45
88739 ... 45
88802 ... 6
88803 ... 6
88806 ... 6
88807 ... 6
88808 ... 6
89016 ... 50
89017 ... 50
89018 ... 50
89019 ... 50
89020 ... 50
89100 ... 49
89101 ... 41, 49
89102 ... 41, 49
89120 ... 49
89121 ... 49
89148 ... 49
89149 ... 49
89150 ... 49
89151 ... 49
89162 ... 49
89163 ... 49
89187 ... 98
89197 ... 50, 98
89213 ... 92
89214 ... 93
89215 ... 93
89216 ... 93
89217 ... 93
89222 ... 94
89223 ... 94
89224 ... 94
89228 ... 95
89229 ... 95
89230 ... 95
89231 ... 95
89232 ... 95
89233 ... 95
89234 ... 95
89235 ... 95
89236 ... 95
89237 ... 95
89239 ... 107
89250 ... 81
89254 ... 81
89256 ... 81
89258 ... 81
89259 ... 80
89260 ... 80
89263 ... 81
89264 ... 81
89268 ... 96
89269 ... 96
89270 ... 96
89271 ... 96
89272 ... 96
89273 ... 96
89274 ... 97
89277 ... 97
89278 ... 97
89280 ... 97
89282 ... 97
89285 ... 97
89286 ... 97
89287 ... 97
89289 ... 97
89290 ... 97
89291 ... 98
89292 ... 98
89293 ... 98
89806 ... 9
90007 ... 5, 6
90614 ... 28
91031 ... 49
91032 ... 49
91033 ... 49
91034 ... 49
91042 ... 113
91044 ... 113
91063 ... 113
91064 ... 113
91066 ... 42, 45
91067 ... 42
91070 ... 42
91072 ... 42
91074 ... 43
91075 ... 43
91076 ... 43
91077 ... 43
91078 ... 43
91079 ... 43, 44
91083 ... 43
91084 ... 44
91086 ... 44
91087 ... 44
91088 ... 44
91089 ... 44
91094 ... 47
91095 ... 47
91096 ... 47
91097 ... 47
91098 ... 47
91099 ... 47
91100 ... 47
91101 ... 47
91102 ... 47
91103 ... 47, 48, 51
91104 ... 47, 48, 51
91105 ... 47, 48, 51
91106 ... 47
91107 ... 47
91108 ... 47
91109 ... 47, 48, 51
91110 ... 47, 48, 51
91113 ... 47
91114 ... 47
91117 ... 47, 48, 51
91120 ... 48, 50, 51
91121 ... 48
91122 ... 48
91123 ... 47, 48
91128 ... 48
91129 ... 48
91133 ... 47, 51
91134 ... 47, 48
91135 ... 48
91136 ... 48
91137 ... 48
91138 ... 48
91139 ... 48
91140 ... 48
91141 ... 48, 50
91142 ... 48, 50
91143 ... 48, 50
91144 ... 48, 50
91146 ... 48
91147 ... 48
91149 ... 48
91150 ... 48
91151 ... 48, 50
91152 ... 48, 50
91153 ... 48, 50
91154 ... 48, 50
91155 ... 48, 50
91156 ... 48, 50, 51
91157 ... 48, 50, 51
91158 ... 48, 50, 51
91159 ... 48, 50, 51
91160 ... 48, 50, 51
91161 ... 48, 50, 51
91162 ... 48, 50, 51
91163 ... 48, 50, 51
91165 ... 48, 50, 51
91166 ... 48, 50, 51
91172 ... 49
91173 ... 49
91174 ... 49
91175 ... 41, 49
91176 ... 41, 49
91177 ... 41, 49
91179 ... 41, 49
91180 ... 49
91196 ... 50
91197 ... 50
91198 ... 50
91216 ... 52
91217 ... 52
91218 ... 52
91219 ... 52
91220 ... 52
91221 ... 52
91222 ... 52
91223 ... 52
91224 ... 52
91225 ... 52
91228 ... 52
91229 ... 52
91230 ... 52
91231 ... 52
91232 ... 52
91233 ... 52
91234 ... 52
91235 ... 52
91238 ... 52
91248 ... 42
91250 ... 42
99016 ... 5, 6
7620521 ... 28
8870922 ... 45

NOTES

NOTES

NOTES

LIFETIME WARRANTY

Greenlee Textron Inc. warrants to the original purchaser of these goods for use, that these products will be free from defects in workmanship and material for their useful life, excepting normal wear and abuse. This warranty is subject to the same terms and conditions contained in Greenlee Textron Inc.'s standard one-year limited warranty.

See below for information regarding product returns.

Greenlee Textron Inc. extends the following warranty to the original purchaser of these goods for use, subject to the qualifications indicated. Greenlee Textron Inc. warrants to the original purchaser for use that the products sold by it will be free from defects in workmanship and material for a period of one year (three years for Gator® battery-powered and corded tools, not including batteries) from the date of purchase, provided such goods are installed, operated, maintained, and used in accordance with Greenlee Textron Inc.'s written instructions.

Ordinary wear and tear, and damage from abuse, neglect or alterations are not covered by this warranty. This warranty is null and void if instructions and operating procedures are not followed.

Greenlee Textron Inc.'s sole liability and purchaser's sole remedy for a failure of goods under this limited warranty, and for any and all claims arising out of the purchase and use of the goods, shall be limited to the repair or replacement of the goods that do not conform to this warranty, and shall be in lieu of any other liability or remedy, including, without limitation, any causes of action in negligence and strict liability.

To obtain repair or replacement service under this limited warranty, the purchaser must return the product to a Greenlee Authorized Service Center, transportation prepaid. Do not send any warranty/repair product directly to Greenlee, as it will be returned to the sender. Only test instruments will be warranted, repaired, replaced, or calibrated at Greenlee with prior authorization.

Tools found defective will be replaced or repaired at no charge and returned. There are no express warranties covering these goods other than as set forth above. The implied warranties of merchantability and fitness for a particular purpose are specifically excluded. Greenlee Textron Inc. assumes no liability in connection with the installation or use of this product, except as stated in this limited warranty. **Greenlee Textron Inc. will in no event be liable for incidental or consequential damages.**

This limited warranty gives you specific legal rights, and you may also have other rights which vary from state to state. Some states do not allow either limitations on implied warranties, or exclusions from incidental or consequential damages, so the above limitation and exclusion may not apply to you.

Any questions pertaining to this limited warranty should be addressed to:

Greenlee / A Textron Company
4411 Boeing Drive, Rockford, IL 61109-2988 USA

Greenlee Textron Inc. has elected not to make available the informal dispute settlement mechanism which is specified in the Magnuson-Moss Warranty Act.

Note: Rental units and demonstrators used for income producing purposes are warranted for 90 days. Rental units and demonstrators which are resold are not covered under warranty by Greenlee Textron Inc. Any warranty, whether expressed or implied, rests solely with the seller.

Lifetime Limited Warranty on Greenlee Electrical Test Instruments, Hand Benders, select Hand Tools and Paladin® branded items.

Greenlee Textron Inc. warrants to the original purchaser of these goods for use that these products will be free from defects in workmanship and material for their useful life, excepting normal wear and abuse. This warranty is subject to the same terms and conditions contained in Greenlee Textron Inc.'s standard one year limited warranty.

Greenlee Electrical Test Instrument Repair and Calibration

For all Greenlee Electrical Test Instrument repairs, contact Customer Service at 1-800-435-0786 and request a return authorization. An approved Authorization including shipping label and instructions will be sent.

For items not covered under warranty (such as items dropped, abused, etc.), a repair cost quote is available upon request.

Note: Prior to returning any test instrument, please check replaceable batteries or make sure the battery is at full charge.

Many end user customers require assurance of product performance. Proof of accuracy and precision of an instrument is often required. This requirement may be a result of ISO procedures or customer quality audit requirements. Greenlee Textron Inc. can provide calibration service for specifically marked hand-held electrical test equipment. Calibration assures the customer that the instrument has been checked and/or calibrated using equipment that is checked and calibrated to standards that are traceable to the National Institute for Standards and Technology (NIST). Products currently included are all clamp meters, professional series digital multimeters and megohmmeters. A certificate will be provided.

To obtain this calibration service, call Customer Service at 1-800-435-0786 and request a return authorization.

ROTHENBERGER LIFETIME WARRANTY

ROTHENBERGER USA LLC warrants all our products against defects in material and workmanship for the life of the product. Warranty coverage ends when the product becomes unusable for reasons other than defects in material and workmanship. This warranty covers replacement or repair of defective parts for the lifetime of the products provided that failure is not due to abuse, misuse, abnormal use, neglect, or normal wear and tear. Motors, switches, and electrical parts, are warranted for a period of one year from the date of sale. Rental units and demonstrators used for income producing purposes are warranted for 90 days. Rental units and demonstrators which are resold are not covered under warranty by ROTHENBERGER USA LLC. Lifetime warranty excludes consumable parts such as cables, rods, and pipe and drain cleaning tools. Any warranty, whether expressed or implied, rests solely with the seller. Warranty is null and void if instructions and operating procedures are not followed or if product has been repaired or altered outside ROTHENBERGER USA LLC or our authorized service centers. No other warranty shall apply. This warranty is in lieu of other expressed or implied, of merchantability, fitness for a particular purpose, performance or otherwise. To obtain repair or replacement service under this limited warranty, the purchaser must return the product freight prepaid to an Authorized Independent Service Center. Repair or replacement will be at the discretion of ROTHENBERGER USA LLC or their authorized service center.

LIMITATION OF LIABILITY

ROTHENBERGER USA LLC liability does not extend beyond the repair or replacement of its product as warranted above. In no event shall ROTHENBERGER USA LLC be liable for claims based upon breach of expressed or implied warranty, negligence or otherwise for any damages whether direct, immediate, incidental, foreseeable, consequential, or special.

GREENLEE®
A Textron Company

FOR PRODUCT VIDEOS,
DEMONSTRATIONS AND MORE, VISIT:
www.youtube.com/GreenleeDEMO

NEED MORE INFORMATION?

USA PHONE 800.435.0786
FAX 800.451.2632

CANADA PHONE 866.384.8813
FAX 800.524.2853

INT'L PHONE +1.815.397.7070
FAX +1.815.397.9247



www.greenlee.com MA-6499 03/16
4455 Boeing Drive • Rockford, IL 61109-2988 • USA • 815-397-7070

©2016 Greenlee Textron Inc. • An ISO 9001 Company • Printed in USA
Greenlee Textron Inc. is a subsidiary of Textron Inc.