Combination, Nylon, Standard Wallplates

Color	2-Gang, 1-Toggle, 1-Decorator	2-Gang, 1-Duplex, 1-Decorator	2-Gang, 1-Blank Box Mount, 1-Decorator	3-Gang, 2-Toggle, 1-Decorator	3-Gang, 1-Toggle, 2-Decorator	4-Gang, 3-Toggle, 1-Decorator	4-Gang, 2-Toggle, 2-Decorator
Black	NP126BK	NP826BK	NP1326BK	NP226BK	NP1262BK	NP326BK	NP2262BK
Brown	NP126	NP826	NP1326	NP226	NP1262	NP326	NP2262
Gray	NP126GY	NP826GY	NP1326GY	NP226GY	NP1262GY	NP326GY	NP2262GY
Ivory	NP126I	NP826I	NP1326I	NP226I	NP1262I	NP326I	NP2262I
Light Almond	NP126LA	NP826LA	NP1326LA	NP226LA	NP1262LA	NP326LA	NP2262LA
White	NP126W	NP826W	NP1326W	NP226W	NP1262W	NP326W	NP2262W

Combination, Nylon, Mid-Size Wallplates

Color	2-Gang, 1-Toggle, 1-Decorator	2-Gang, 1-Duplex, 1-Decorator	2-Gang, 1-Blank Box Mount, 1-Decorator	3-Gang, 2-Toggle, 1-Decorator	3-Gang, 1-Toggle, 2-Decorator	4-Gang, 3-Toggle, 1-Decorator	4-Gang, 2-Toggle, 2-Decorator
Black	NPJ126BK	NPJ826BK	—	NPJ226BK	—	—	—
Brown	NPJ126	NPJ826	NPJ1326	NPJ226	—	—	—
Gray	NPJ126GY	NPJ826GY	—	NPJ226GY	—	—	—
Ivory	NPJ126I	NPJ826I	NPJ1326I	NPJ226I	—	—	—
Light Almond	NPJ126LA	NPJ826LA	NPJ1326LA	NPJ226LA	—	—	—
White	NPJ126W	NPJ826W	NPJ1326W	NPJ226W	—	—	—

Combination, Standard, Metal Wallplates

Material	2-Gang, 1-Toggle, 1-Decorator	2-Gang, 1-Duplex, 1-Decorator	2-Gang, 1-Blank Strap Mount, 1-Decorator	3-Gang, 2-Toggle, 1-Decorator	3-Gang, 1-Toggle, 2-Decorator	4-Gang, 3-Toggle, 1-Decorator	4-Gang, 2-Toggle, 2-Decorator
Brass	SB126	SB826	—	—	—	—	—
Brass Plated	SBP126	—	—	—	—	—	—
Chrome	—	—	—	—	—	—	—
SS 302/304	SS126	SS826	SS1426	SS226	—	SS326	—
SS 430	SS126L	—	—	—	—	—	—

Note: See section P for complete selection of wallplates.

Dimensions

Snap-On Wallplate

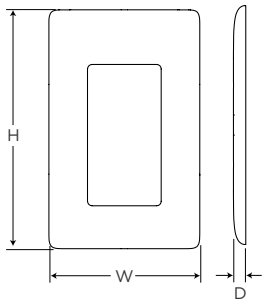

Gang	Height (H)	Width (W)	Depth (D)
1	4.75″ (120.6)	3.00″ (76.2)	.25″ (6.2)
2	4.75″ (120.6)	4.81″ (122.2)	.25″ (6.2)
3	4.75″ (120.6)	6.62″ (168.2)	.25″ (6.2)
4	4.75″ (120.6)	8.44″ (214.3)	.25″ (6.2)

Standard Size Nylon

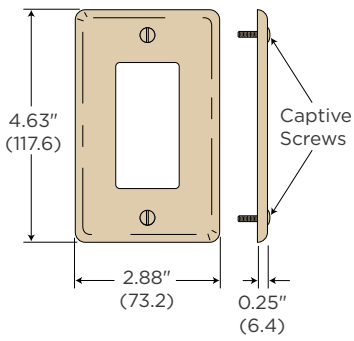

Mid-Size Nylon

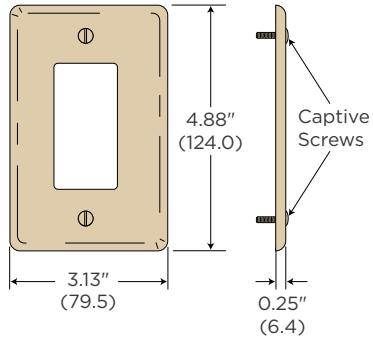

Dimensions in Inches (mm)