SATCO | NUVO













LED | FILAMENT LAMPS

Table of Contents

Filament Reminiscent ..... 4 - 5
Filament (A-Type) ..... 6 - 11
Filament (Decorative) ..... 12 - 29
Filament (Specialty) ..... 30 - 41

60 YEARS IN BUSINESS

100% INDEPENDENT PRIVATELY OWNED

18,000 + PRODUCTS

2 MILLION SQ. FT OF INVENTORY

6 WAREHOUSE LOCATIONS

SATCO® is your single source solution for all of your lighting needs. From emerging LED technologies to decorative fixtures and lighting components, we carry products for nearly every industry and application to our customers. Independent and privately owned for 60 years, SATCO continues to grow because of our traditional values: trust, quality, loyalty and hard work. Agile in practice, unwavering in customer focus...

...we deliver on product, promise & partnership.

SATCO® has two lines of product to help you meet California's Building and Appliance codes:

Building Code (Title 24): The full line of Joint Appendix 8 (JA8) lamps are certified to the Title 24 2025 building code. These products will help you comply with the newest California residential building codes.

Appliance Code (Title 20): Lamps and Retrofit Kits are considered appliances in the California Code, and Title 20 is one of the most stringent in the country. Satco has a full line of products that are compliant with this code.

As an ongoing effort on behalf of Satco Products, Inc. to remain dedicated to the improvement of our products, we reserve the right to change specifications. The information contained in this specification guide is subject to change without notice. We cannot be responsible for typographical errors.

© Satco Products, Inc. All rights reserved.

REMINISCENT™
GRAY LED FILAMENT LAMPS



Features:

- Elegant gray filament
- Ultra-clear glass bulb
- Excellent color rendering



REMINISCENT™
GRAY LED FILAMENT LAMPS


S11525


S11526


S11520


S11527


S11523


S11521


S11522


S11528


S11524

90 CRI · DAMP LOCATION · DIMMABLE · ENCLOSED FIXTURE · 360° BEAM · TITLE 20 · 3 YEAR WARRANTY · c UL us LISTED · FC · RoHS COMPLIANT

Item	Description	Lamp Shape	Filament Style	Base	Lm	W	Incandescent Replacement Wattage	MOL (in.)	Pack
Boxed									
S11520	6ST19/CL/LED-GF/COIL/927/120V	ST19	Coil	E26	500	6	40W	5.31	24/6
S11527	6ST19/CL/LED-GF/LOOP/927/120V	ST19	Loop	E26	500	6	40W	5.31	24/6
S11521	6A19/CL/LED-GF/COIL/927/120V	A19	Coil	E26	500	6	40W	4.17	24/6
S11525	4B11/CL/LED-GF/COIL/927/120V	B11	Coil	E12	350	4	40W	3.94	24/6
S11526	4CA11/CL/LED-GF/COIL/927/120V	CA11	Coil	E12	350	4	40W	4.48	24/6
S11522	6G25/CL/LED-GF/COIL/927/120V	G25	Coil	E26	500	6	60W	4.72	24/6
S11528	6G25/CL/LED-GF/LOOP/927/120V	G25	Loop	E26	500	6	60W	4.72	24/6
S11524	6T9/CL/LED-GF/COIL/927/120V	T9	Coil	E26	500	6	40W	7.48	24/6
S11523	6T9/CL/LED-GF/STR/927/120V	T9	Straight	E26	500	6	40W	11.02	24/6
Carded									
S10520	6ST19/CL/LED-GF/COIL/927/1CD	ST19	Flex	E26	500	6	40W	5.31	24/12
S10525	6ST19/CL/LED-GF/LOOP/927/1CD	ST19	Flex	E26	500	6	40W	5.31	24/12
S10521	6A19/CL/LED-GF/COIL/927/1CD	A19	Flex	E26	500	6	40W	4.17	24/12
S10523	4B11/CL/LED-GF/COIL/927/2CD	B11	Flex	E12	350	4	40W	3.94	24/12
S10524	4CA11/CL/LED-GF/COIL/927/2CD	CA11	Flex	E12	350	4	40W	4.48	24/12
S10522	6T9/CL/LED-GF/COIL/927/2CD	T9	Flex	E26	500	6	60W	7.48	24/12

See warranty for details at www.satco.com

Product sheet SN1654

© Satco Products, Inc. All rights reserved.

LED A15, A19
FILAMENT LAMPS

Features:

- 90 CRI
- 40-100W replacements
- High lumens & efficiency
- Clear and soft white options
- 4 CCT options
- Approved for enclosed fixtures^
- Dimmable
- Long life



LED A15 FILAMENT LAMPS
40W, 60W REPLACEMENTS



A15/E12



A15 FR



A15 SW



A15 CL

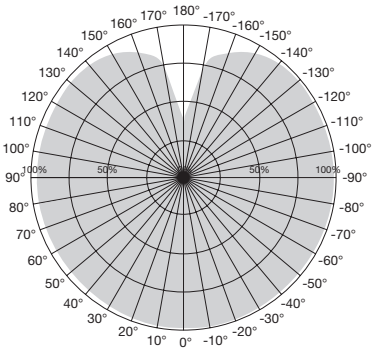

Beam Angle: 320°

Item	Description	W	V	Bulb Shape	Base	Finish	CCT	Lm	CRI	MOL (in.)	MOD (in.)	Life (hrs.)	UPC	Pack
40 Watt Replacement														
S12400	5A15/CL/LED/927/120V	5	120	A15	E26	CL	2700K	450	90	3.39	1.89	15K	045923124006	24/6
S12401	5A15/CL/LED/930/120V	5	120	A15	E26	CL	3000K	450	90	3.39	1.89	15K	045923124013	24/6
S12402	5A15/CL/LED/940/120V	5	120	A15	E26	CL	4000K	450	90	3.39	1.89	15K	045923124020	24/6
S12403	5A15/CL/LED/950/120V	5	120	A15	E26	CL	5000K	450	90	3.39	1.89	15K	045923124037	24/6
S12404	5A15/SW/LED/927/120V	5	120	A15	E26	SW	2700K	450	90	3.39	1.89	15K	045923124044	24/6
S12405	5A15/SW/LED/930/120V	5	120	A15	E26	SW	3000K	450	90	3.39	1.89	15K	045923124051	24/6
40 Watt Replacement-Carded														
S21871	5.5A15/CL/LED/927/E12/2CD	5.5	120	A15	E12	CL	2700K	450	90	3.43	1.85	15K	045923218712	24/12
S21872	5.5A15/CL/LED/927/E17/2CD	5.5	120	A15	E17	CL	2700K	450	90	3 .19	1.85	15K	045923218729	24/12
S21873	5.5A15/CL/LED/927/E26/2CD	5.5	120	A15	E26	CL	2700K	450	90	3.39	1.85	15K	045923218736	24/12
S21874	5.5A15/FR/LED/927/E26/2CD	5.5	120	A15	E26	FR	2700K	450	90	3.39	1.85	15K	045923218743	24/12
60 Watt Replacement														
S12406	8.2A15/CL/LED/930/120V	8.2	120	A15	E26	CL	3000K	800	90	3.39	1.89	15K	045923124068	24/6
S12407	8.2A15/SW/LED/930/120V	8.2	120	A15	E26	SW	3000K	800	90	3.39	1.89	15K	045923124075	24/6

ˆSee warranty for details at www.satco.com. *Only S21872

Product sheet SA2690

© Satco Products, Inc. All rights reserved.

90 CRI LED A19 FILAMENT LAMPS 40W, 60W REPLACEMENTS



A19 SW



A19 CL

Item	Description	W	V	Bulb Shape	Base	Finish	CCT	Lm	CRI	Beam	MOL (in.)	MOD (in.)	Life (hrs.)	UPC	Pack
40W Replacement															
S12408	5A19/CL/LED/927/120V	5	120	A19	E26	CL	2700K	450	90	320°	4.02	2.36	15K	045923124082	24/6
S12409	5A19/CL/LED/930/120V	5	120	A19	E26	CL	3000K	450	90	320°	4.02	2.36	15K	045923124099	24/6
S12468	5A19/CL/LED/935/120V	5	120	A19	E26	CL	3500K	450	90	320°	4.02	2.36	15K	045923124693	24/6
S12410	5A19/CL/LED/940/120V	5	120	A19	E26	CL	4000K	450	90	320°	4.02	2.36	15K	045923124105	24/6
S12411	5A19/CL/LED/950/120V	5	120	A19	E26	CL	5000K	450	90	320°	4.02	2.36	15K	045923124112	24/6
S12412	5A19/SW/LED/927/120V	5	120	A19	E26	SW	2700K	450	90	320°	4.02	2.36	15K	045923124129	24/6
S12413	5A19/SW/LED/930/120V	5	120	A19	E26	SW	3000K	450	90	320°	4.02	2.36	15K	045923124136	24/6
Multi-Pack															
S12460	5A19/CL/LED/927/4PK/120V	5	120	A19	E26	CL	2700K	450	90	280°	4.33	2.36	15K	045923124600	12-4pks
S12461	5A19/CL/LED/930/4PK/120V	5	120	A19	E26	CL	3000K	450	90	280°	4.33	2.36	15K	045923124617	12-4pks



A19 FR



A19 CL



+ A19 SLV



A19 GLD

Item	Description	W	V	Bulb Shape	Base	Finish	CCT	Lm	CRI	Beam	MOL (in.)	MOD (in.)	Life (hrs.)	UPC	Pack
60 Watt Replacement															
S12537	8A19/SLVR/LED/927/120V	8	120	A19	E26	SLV	2700K	650	90	180°	4.34	2.37	15K	045923125379	24/6
S12538	8A19/GOLD/LED/927/120V	8	120	A19	E26	GLD	2700K	650	90	180°	4.34	2.37	15K	045923125386	24/6
S39879	8A19/CL/LED/927/120V	8	120	A19	E26	CL	2700K	800	90	320°	4.13	2.38	15K	045923398797	24/6
S12414	8A19/CL/LED/927/120V	8	120	A19	E26	CL	2700K	800	90	320°	4.02	2.36	15K	045923124143	24/6
S12415	8A19/CL/LED/930/120V	8	120	A19	E26	CL	3000K	800	90	320°	4.02	2.36	15K	045923124150	24/6
S12416	8A19/CL/LED/935/120V	8	120	A19	E26	CL	3500K	800	90	320°	4.02	2.36	15K	045923124167	24/6
S12417	8A19/CL/LED/940/120V	8	120	A19	E26	CL	4000K	800	90	320°	4.02	2.36	15K	045923124174	24/6
S12418	8A19/CL/LED/950/120V	8	120	A19	E26	CL	5000K	800	90	320°	4.02	2.36	15K	045923124181	24/6
S12419	8.2A19/SW/LED/927/120V	8.2	120	A19	E26	SW	2700K	800	90	320°	4.02	2.36	15K	045923124198	24/6
S12420	8.2A19/SW/LED/930/120V	8.2	120	A19	E26	SW	3000K	800	90	320°	4.02	2.36	15K	045923124204	24/6
S11355 ‡	8A19/CL/LED/930/120V	8	120	A19	E26	CL	3000K	800	90	320°	4.30	2.36	15K	045923113550	24/6
S11356 ‡	8A19/SW/LED/927/120V	8	120	A19	E26	SW	2700K	800	90	320°	4.30	2.36	15K	045923113567	24/6
Multi-Pack															
S12462	8A19/CL/LED/927/4PK/120V	8	120	A19	E26	CL	2700K	800	90	280°	4.33	2.36	15K	045923124624	12-4 Pks
S12463	8A19/CL/LED/930/4PK/120V	8	120	A19	E26	CL	3000K	800	90	280°	4.33	2.36	15K	045923124631	12-4 Pks
S12464	8A19/CL/LED/940/4PK/120V	8	120	A19	E26	CL	4000K	800	90	280°	4.33	2.36	15K	045923124648	12-4 Pks
S12465	8A19/CL/LED/950/4PK/120V	8	120	A19	E26	CL	5000K	800	90	280°	4.33	2.36	15K	045923124655	12-4 Pks
S12466	8A19/SW/LED/927/4PK/120V	8	120	A19	E26	SW	2700K	800	90	280°	4.33	2.36	15K	045923124662	12-4 Pks
S12467	8A19/SW/LED/930/4PK/120V	8	120	A19	E26	SW	3000K	800	90	280°	4.33	2.36	15K	045923124679	12-4 Pks

^See warranty for details at www.satco.com. + Silver crown are 180° beam angle. T24/JA8.

Product sheet SA2690

90 CRI LED A19 FILAMENT LAMPS 75W, 100W REPLACEMENTS



A19 SW



A19 CL

Item	Description	W	V	Bulb Shape	Base	Finish	CCT	Lm	CRI	Beam	MOL (in.)	MOD (in.)	Life (hrs.)	UPC	Pack
75W Replacement															
S12422	10.5A19/CL/LED/927/120V	10.5	120	A19	E26	CL	2700K	1100	90	320°	4.02	2.36	15K	045923124228	24/6
S12423	10.5A19/CL/LED/930/120V	10.5	120	A19	E26	CL	3000K	1100	90	320°	4.02	2.36	15K	045923124235	24/6
S12469	10.5A19/CL/LED/935/120V	10.5	120	A19	E26	CL	3500K	1100	90	320°	4.02	2.36	15K	045923124693	24/6
S12424	10.5A19/CL/LED/940/120V	10.5	120	A19	E26	CL	4000K	1100	90	320°	4.02	2.36	15K	045923124242	24/6
S12425	10.5A19/CL/LED/950/120V	10.5	120	A19	E26	CL	5000K	1100	90	320°	4.02	2.36	15K	045923124259	24/6
S12426	11A19/SW/LED/927/120V	11	120	A19	E26	SW	2700K	1100	90	320°	4.02	2.36	15K	045923124266	24/6
S12427	11A19/SW/LED/930/120V	11	120	A19	E26	SW	3000K	1100	90	320°	4.02	2.36	15K	045923124273	24/6
S12428	11A19/SW/LED/940/120V	11	120	A19	E26	SW	4000K	1100	90	320°	4.02	2.36	15K	045923124280	24/6
S11357‡▪	11A19/CL/LED/927/120V	11	120	A19	E26	CL	2700K	1100	90	320°	4.30	2.36	15K	045923113574	24/6
S11358‡▪	11A19/CL/LED/930/120V	11	120	A19	E26	CL	3000K	1100	90	320°	4.30	2.36	\15K	045923113581	24/6
S11359‡▪	11A19/SW/LED/927/120V	11	120	A19	E26	SW	2700K	1100	90	320°	4.30	2.36	15K	045923113598	24/6
Multi-Pack															
S12436	10.5A19/CL/LED/927/120V/4PK	10.5	120	A19	E26	CL	2700K	1100	90	320°	4.02	2.36	15K	045923124365	12-4pks
S12437	10.5A19/CL/LED/930/120V/4PK	10.5	120	A19	E26	CL	3000K	1100	90	320°	4.02	2.36	15K	045923124372	12-4pks
S12438	11A19/SW/LED/927/120V/4PK	11	120	A19	E26	SW	2700K	1100	90	320°	4.02	2.36	15K	045923124389	12-4pks
S12439*	11A19/SW/LED/930/120V/4PK	11	120	A19	E26	SW	3000K	1100	90	320°	4.02	2.36	15K	045923124396	12-4pks

See warranty for details at www.satco.com. *S12469 not T20. Product sheet SA2690



A19 SW



A19 CL



A19 SLV



A19 GLD

Item	Description	W	V	Bulb Shape	Base	Finish	CCT	Lm	CRI	Beam	MOL (in.)	MOD (in.)	Life (hrs.)	UPC	Pack
100W Replacement															
S12539	12A19/SLVR/LED/927/120V	12	120	A19	E26	SLV	2700K	1000	90	180°	4.34	2.37	15K	045923125393	24/6
S12540	12A19/GOLD/LED/927/120V	12	120	A19	E26	GLD	2700K	1000	90	180°	4.34	2.37	15K	045923125409	24/6
S12429	12.5A19/CL/LED/927/120V	12.5	120	A19	E26	CL	2700K	1500	90	320°	4.41	2.36	15K	045923124297	24/6
S12430	12.5A19/CL/LED/930/120V	12.5	120	A19	E26	CL	3000K	1500	90	320°	4.41	2.36	15K	045923124303	24/6
S12470	12.5A19/CL/LED /935/120V	12.5	120	A19	E26	CL	3500K	1500	90	300°	4.41	2.36	15K	045923124709	24/6
S12431	12.5A19/CL/LED/940/120V	12.5	120	A19	E26	CL	4000K	1500	90	320°	4.41	2.36	15K	045923124310	24/6
S12432	12.5A19/CL/LED/950/120V	12.5	120	A19	E26	CL	5000K	1500	90	320°	4.41	2.36	15K	045923124327	24/6
S12433	13.5A19/SW/LED/927/120V	13.5	120	A19	E26	SW	2700K	1500	90	320°	4.41	2.36	15K	045923124334	24/6
S12434	13.5A19/SW/LED/930/120V	13.5	120	A19	E26	SW	3000K	1500	90	320°	4.41	2.36	15K	045923124341	24/6
S12435	13.5A19/SW/LED/940/120V	13.5	120	A19	E26	SW	4000K	1500	90	320°	4.41	2.36	15K	045923124358	24/6
S11360‡▪ˆ	14A21/CL/LED/927/120V	14	120	A21	E26	CL	2700K	1600	90	320°	5.00	2.76	15K	045923113604	24/6
S11361‡▪ˆ	14A21/CL/LED/930/120V	14	120	A21	E26	CL	3000K	1600	90	320°	5.00	2.76	15K	045923113611	24/6
S11362‡▪ˆ	14A21/SW/LED/927/120V	14	120	A21	E26	SW	2700K	1600	90	320°	5.00	2.76	15K	045923113628	24/6
Multi-Pack															
S12442	12.5A19/CL/LED/927/120V/4PK	12.5	120	A19	E26	CL	2700K	1500	90	320°	4.41	2.36	15K	045923124426	12-4pks
S12443	12.5A19/CL/LED/930/120V/4PK	12.5	120	A19	E26	CL	3000K	1500	90	320°	4.41	2.36	15K	045923124433	12-4pks
S12440	13.5A19/FR/LED/927/120V/4PK	13.5	120	A19	E26	SW	2700K	1500	90	320°	4.41	2.36	15K	045923124402	12-4pks
S12441ˆ	13.5A19/FR/LED/930/120V/4PK	13.5	120	A19	E26	SW	3000K	1500	90	320°	4.41	2.36	15K	045923124419	12-4pks

ˆSee warranty for details at www.satco.com. ▪T24/JA8.

Product sheet SA2690

© Satco Products, Inc. All rights reserved.

RESIDENTIAL AND COMMERCIAL HIGH LUMEN FILAMENT LAMPS



Features:

- Replaces up to 200W incandescent
- Improved lumens per watt—higher efficiency
- LED filament and glass envelope construction
- Dimmable*
- Wet location
- T20 compliant†
- 3 year warranty



RESIDENTIAL AND COMMERCIAL HIGH LUMEN FILAMENT LAMPS



A21



A23

* DIMMABLE | WET LOCATION | † TITLE 20 | c UL us

Item	Description	W	Bulb Shape	V	Base	Finish	CCT	Lm	CRI	Life/ Hrs.	MOL (in.)	UPC	Pack
125 Watt Replacement													
S12444†	17A21/FR/LED/E26/930/120V	17	A21	120	E26	FR	3000	2000	90	15,000	5.2	045923124440	24/12
S12445*†	17A21/FR/LED/E26/940/120V	17	A21	120	E26	FR	4000	2000	90	15,000	5.2	045923124457	24/12
S12446*†	17A21/FR/LED/E26/950/120V	17	A21	120	E26	FR	5000	2000	90	15,000	5.2	045923124464	24/12
150 Watt Replacement													
S12447*	18.5A21/FR/LED/E26/830/120V	18.5	A21	120	E26	FR	3000	2610	80	15,000	5.2	045923124471	24/12
S12448*	18.5A21/FR/LED/E26/840/120V	18.5	A21	120	E26	FR	4000	2610	80	15,000	5.2	045923124488	24/12
S12449*	18.5A21/FR/LED/E26/850/120V	18.5	A21	120	E26	FR	5000	2610	80	15,000	5.2	045923124495	24/12
200 Watt Replacement													
S12450	21A23/FR/LED/E26/830/120V/ND	21	A23	120	E26	FR	3000	2900	80	15,000	5.6	045923124501	24/12
S12451	21A23/FR/LED/E26/840/120V/ND	21	A23	120	E26	FR	4000	2900	80	15,000	5.6	045923124518	24/12
S12452	21A23/FR/LED/E26/850/120V/ND	21	A23	120	E26	FR	5000	2900	80	15,000	5.6	045923124525	24/12

Product sheet SA2919

© Satco Products, Inc. All rights reserved.

LED FILAMENT
LAMPS GLOBES - G16½

Features:

- LED with a traditional incandescent look and feel
- Omni-directional light source
- Dimmable
- Wet location
- Approved for totally enclosed fixtures^
- c-UL-us or c-ETL-us listed
- CEC T20
- 3 year warranty



G16½ WH E12



G16½ CL E12



G16½ CL E26



G16½ WH E26

LED FILAMENT LAMPS GLOBES - G16½

Item	Description	W	V	Bulb Shape	Base	Finish	CCT	Lm	CRI	MOL (in.)	MOD (in.)	Life (hrs.)	UPC	Pack
25 Watt Replacement E12														
S21200	3G16.5/LED/CL/927/120V/E12	3	120	G16.5	E12	CL	2700K	200	90	3.11	1.97	15K	045923205156	24/6
S12471*	3G16.5/LED/CL/930/120V/E12	3	120	G16.5	E12	CL	3000K	200	90	3.11	1.97	15K	045923124716	24/6
S21201	3G16.5/LED/CL/940/120V/E12	3	120	G16.5	E12	CL	4000K	200	90	3.11	1.97	15K	045923205163	24/6
S21202	3G16.5/LED/WH/927/120V/E12	3	120	G16.5	E12	WH	2700K	200	90	3.11	1.97	15K	045923205170	24/6
S21203	3G16.5/LED/WH/940/120V/E12	3	120	G16.5	E12	WH	4000K	200	90	3.11	1.97	15K	045923205187	24/6
40 Watt Replacement E12														
S21204	4G16.5/LED/CL/927/120V/E12	4	120	G16.5	E12	CL	2700K	350	90	3.11	1.97	15K	045923205194	24/6
S21205	4G16.5/LED/CL/930/120V/E12	4	120	G16.5	E12	CL	3000K	350	90	3.11	1.97	15K	045923205200	24/6
S12472*	4G16.5/LED/CL/935/120V/E12	4	120	G16.5	E12	CL	3500K	350	90	3.11	1.97	15K	045923124723	24/6
S21206	4G16.5/LED/CL/940/120V/E12	4	120	G16.5	E12	CL	4000K	350	90	3.11	1.97	15K	045923205217	24/6
S12473*	4G16.5/LED/CL/950/120V/E12	4	120	G16.5	E12	CL	5000K	350	90	3.11	1.97	15K	045923124730	24/6
S21207	4.5G16.5/LED/WH/927/120V/E12	4.5	120	G16.5	E12	WH	2700K	350	90	3.11	1.97	15K	045923205224	24/6
S12474*	4.5G16.5/LED/WH/930/120V/E12	4.5	120	G16.5	E12	WH	3000K	350	90	3.11	1.97	15K	045923124747	24/6
S21208	4.5G16.5/LED/WH/940/120V/E12	4.5	120	G16.5	E12	WH	4000K	350	90	3.11	1.97	15K	045923205231	24/6
40 Watt Replacement E12-Carded														
S21810	4G16.5/LED/CL/927/120V/E12/2CD	4	120	G16.5	E12	CL	2700K	350	90	3.11	1.97	15K	045923218101	24/12
S21811	4G16.5/LED/CL/930/120V/E12/2CD	4	120	G16.5	E12	CL	3000K	350	90	3.11	1.97	15K	045923218118	24/12
S21875	4G16.5/LED/CL/950/120V/E12/2CD	4	120	G16.5	E12	CL	5000K	350	90	3.11	1.97	15K	045923218750	24/12
S21812	4.5G16.5/LED/WH/927/120V/E12/2CD	4.5	120	G16.5	E12	WH	2700K	350	90	3.11	1.97	15K	045923218125	24/12
S21876	4.5G16.5/LED/WH/950/120V/E12/2	4.5	120	G16.5	E12	WH	5000K	350	90	3.11	1.97	15K	045923218767	24/12
40 Watt Replacement E26														
S21215	4G16.5/LED/CL/927/120V/E26	4	120	G16.5	E26	CL	2700K	350	90	3.11	1.97	15K	045923205309	24/6
S21216	4G16.5/LED/CL/930/120V/E26	4	120	G16.5	E26	CL	3000K	350	90	3.11	1.97	15K	045923205316	24/6
S12475*	4G16.5/LED/CL/935/120V/E26	4	120	G16.5	E26	C L	3500K	350	90	3.11	1.97	15K	045923124754	24/6
S21217	4G16.5/LED/CL/940/120V/E26	4	120	G16.5	E26	CL	4000K	350	90	3.11	1.97	15K	045923205323	24/6
S12476*	4G16.5/LED/CL/950/120V/E26	4	120	G16.5	E26	CL	5000K	350	90	3.11	1.97	15K	045923124761	24/6
S21218	4.5G16.5/LED/WH/927/120V/E26	4.5	120	G16.5	E26	WH	2700K	350	90	3.11	1.97	15K	045923205330	24/6
S21219	4.5G16.5/LED/WH/940/120V/E26	4.5	120	G16.5	E26	WH	4000K	350	90	3.11	1.97	15K	045923205347	24/6
40 Watt Replacement E26-Carded														
S21815	4G16.5/LED/CL/927/120V/E26/2CD	4	120	G16.5	E26	CL	2700K	350	90	3.11	1.97	15K	045923218156	24/12
S21877	4G16.5/LED/CL/950/120V/E26/2CD	4	120	G16.5	E26	CL	5000K	350	90	3.11	1.97	15K	045923218774	24/12
S21816	4.5G16.5/LED/WH/927/120V/E26/2CD	4.5	120	G16.5	E26	WH	2700K	350	90	3.11	1.97	15K	045923218163	24/12
S21878	4.5G16.5/LED/WH/950/120V/E26/2CD	4.5	120	G16.5	E26	WH	5000K	350	90	3.11	1.97	15K	045923218781	24/12
60 Watt Replacement E12														
S21209	5.5G16.5/LED/CL/927/120V/E12	5.5	120	G16.5	E12	CL	2700K	500	90	3.11	1.97	15K	045923205248	24/6
S21210	5.5G16.5/LED/CL/930/120V/E12	5.5	120	G16.5	E12	CL	3000K	500	90	3.11	1.97	15K	045923205255	24/6
S12477*	5.5G16.5/LED/CL/935/120V/E12	5.5	120	G16.5	E12	CL	3500K	500	90	3.11	1.97	15K	045923124778	24/6
S21211	5.5G16.5/LED/CL/940/120V/E12	5.5	120	G16.5	E12	CL	4000K	500	90	3.11	1.97	15K	045923205262	24/6
S12478*	5.5G16.5/LED/CL/950/120V/E12	5.5	120	G16.5	E12	CL	5000K	500	90	3.11	1.97	15K	045923124785	24/6
S21212	5.5G16.5/LED/WH/927/120V/E12	5.5	120	G16.5	E12	WH	2700K	500	90	3.11	1.97	15K	045923205279	24/6
S21213	5.5G16.5/LED/WH/930/120V/E12	5.5	120	G16.5	E12	WH	3000K	500	90	3.11	1.97	15K	045923205286	24/6
S21214	5.5G16.5/LED/WH/940/120V/E12	5.5	120	G16.5	E12	WH	4000K	500	90	3.11	1.97	15K	045923205293	24/6
60 Watt Replacement E12-Carded														
S21813	5.5G16.5/LED/CL/927/120V/E12/2CD	5.5	120	G16.5	E12	CL	2700K	500	90	3.11	1.97	15K	045923218132	24/12
S21814	5.5G16.5/LED/WH/927/120V/E12/2CD	5.5	120	G16.5	E12	WH	2700K	500	90	3.11	1.97	15K	045923218149	24/12
60 Watt Replacement E26														
S21220	5.5G16.5/LED/CL/927/120V/E26	5.5	120	G16.5	E26	CL	2700K	500	90	3.11	1.97	15K	045923205354	24/6
S21221	5.5G16.5/LED/CL/930/120V/E26	5.5	120	G16.5	E26	CL	3000K	500	90	3.11	1.97	15K	045923205361	24/6
S12479*	5.5G16.5/LED/CL/935/120V/E26	5.5	120	G16.5	E26	CL	3500K	500	90	3.11	1.97	15K	045923124792	24/6
S21222	5.5G16.5/LED/CL/940/120V/E26	5.5	120	G16.5	E26	CL	4000K	500	90	3.11	1.97	15K	045923205378	24/6
S12480*	5.5G16.5/LED/CL/950/120V/E26	5.5	120	G16.5	E26	CL	5000K	500	90	3.11	1.97	15K	045923124808	24/6
S21223	5.5G16.5/LED/WH/927/120V/E26	5.5	120	G16.5	E26	WH	2700K	500	90	3.11	1.97	15K	045923205385	24/6
S21224	5.5G16.5/LED/WH/930/120V/E26	5.5	120	G16.5	E26	WH	3000K	500	90	3.11	1.97	15K	045923205392	24/6
S21225	5.5G16.5/LED/WH/940/120V/E26	5.5	120	G16.5	E26	WH	4000K	500	90	3.11	1.97	15K	045923205408	24/6

ˆSee warranty for details at www.satco.com. *cULus rated.

Product sheet SA1980

© Satco Products, Inc. All rights reserved.

LED FILAMENT LAMPS
GLOBES - G25 40W & 60W REPLACEMENTS

Features:

- LED with a traditional incandescent look and feel
- Omni-directional light source
- Dimmable
- Wet location
- Approved for totally enclosed fixtures^
- c-UL-us or c-ETL-us listed
- CEC T20
- 3 year warranty



G25 Clear | G25 White | G25 SLV | G25 GLD



Item	Description	W	V	Bulb Shape	Base	Finish	CCT	Lm	CRI	MOL (in.)	MOD (in.)	Life (hrs.)	UPC	Pack
40 Watt Replacement														
S21226	4.5G25/LED/CL/927/120V	4.5	120	G25	E26	CL	2700K	350	90	4.45	3.15	15K	045923205415	24/6
S21227	4.5G25/LED/CL/930/120V	4.5	120	G25	E26	CL	3000K	350	90	4.45	3.15	15K	045923205422	24/6
S12481	4.5G25/LED/CL/935/120V	4.5	120	G25	E26	CL	3500K	350	92	4.45	3.15	15K	045923124815	24/6
S21228	4.5G25/LED/CL/940/120V	4.5	120	G25	E26	CL	4000K	350	90	4.45	3.15	15K	045923205439	24/6
S21229	4.5G25/LED/CL/950/120V	4.5	120	G25	E26	CL	5000K	350	90	4.45	3.15	15K	045923205446	24/6
S21230	4.5G25/LED/WH/927/120V	4.5	120	G25	E26	WH	2700K	350	90	4.45	3.15	15K	045923205453	24/6
S21231	4.5G25/LED/WH/930/120V	4.5	120	G25	E26	WH	3000K	350	90	4.45	3.15	15K	045923205460	24/6
S21232	4.5G25/LED/WH/940/120V	4.5	120	G25	E26	WH	4000K	350	90	4.45	3.15	15K	045923205477	24/6
S21233	4.5G25/LED/WH/950/120V	4.5	120	G25	E26	WH	5000K	350	90	4.45	3.15	15K	045923205484	24/6
Multi-Pack														
S21242	4.5G25/LED/CL/927/120V/2PK	4.5	120	G25	E26	CL	2700K	350	90	4.45	3.15	15K	045923205576	24/2pks
S21243	4.5G25/LED/CL/930/120V/2PK	4.5	120	G25	E26	CL	3000K	350	90	4.45	3.15	15K	045923205583	24/2pks
S21244	4.5G25/LED/WH/927/120V/2PK	4.5	120	G25	E26	WH	2700K	350	90	4.45	3.15	15K	045923205590	24/2pks
60 Watt Replacement														
S12541	5.5G25/SLVR/LED/927/120V	5.5	120	G25	E26	SLV	2700K	500	90	4.53	3.15	15K	045923125416	24/6
S12542	5.5G25/GOLD/LED/927/120V	5.5	120	G25	E26	GLD	2700K	500	90	4.53	3.15	15K	045923125423	24/6
S29878‡	5.5G25/LED/CL/927/120V	5.5	120	G25	E26	CL	2700K	500	90	4.45	3.15	15K	045923298783	24/6
S21234	6G25/LED/CL/927/120V	6	120	G25	E26	CL	2700K	500	90	4.45	3.15	15K	045923205491	24/6
S21235	6G25/LED/CL/930/120V	6	120	G25	E26	CL	3000K	500	90	4.45	3.15	15K	045923205507	24/6
S12482	6G25/LED/CL/935/120V	6	120	G25	E26	CL	3500K	500	90	4.45	3.15	15K	045923124822	24/6
S21236	6G25/LED/CL/940/120V	6	120	G25	E26	CL	4000K	500	90	4.45	3.15	15K	045923205514	24/6
S21237	6G25/LED/CL/950/120V	6	120	G25	E26	CL	5000K	500	90	4.45	3.15	15K	045923205521	24/6
S21238	6G25/LED/WH/927/120V	6	120	G25	E26	WH	2700K	500	90	4.45	3.15	15K	045923205538	24/6
S21239	6G25/LED/WH/930/120V	6	120	G25	E26	WH	3000K	500	90	4.45	3.15	15K	045923205545	24/6
S12483	6G25/LED/WH/935/120V	6	120	G25	E26	WH	3500K	500	90	4.45	3.15	15K	045923124839	24/6
S21240	6G25/LED/WH/940/120V	6	120	G25	E26	WH	4000K	500	90	4.45	3.15	15K	045923205552	24/6
S21241	6G25/LED/WH/950/120V	6	120	G25	E26	WH	5000K	500	90	4.45	3.15	15K	045923205569	24/6
Multi-Pack														
S21245	6G25/LED/CL/927/120V/2PK	6	120	G25	E26	CL	2700K	500	90	4.45	3.15	15K	045923205606	24/2pks
S21246	6G25/LED/CL/930/120V/2PK	6	120	G25	E26	CL	3000K	500	90	4.45	3.15	15K	045923205613	24/2pks
S21247	6G25/LED/WH/927/120V/2PK	6	120	G25	E26	WH	2700K	500	90	4.45	3.15	15K	045923205620	24/2pks

^See warranty for details at www.satco.com. Damp Rated.

Product sheet SA1980

LED FILAMENT LAMPS
GLOBES - G40 40W, 60W, & 100W REPLACEMENTS

Features:

- LED with a traditional incandescent look and feel
- Omni-directional light source
- Dimmable
- Wet location
- Approved for totally enclosed fixtures^
- c-UL-us or c-ETL-us listed
- 3 year warranty



G40 Clear | G40 White | G40 SLV | G40 GLD



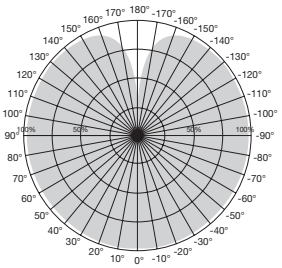

Beam Angle: 300°-320°

TITLE 20 | DIMMABLE^ | ENCLOSED FIXTURE | WET LOCATION | c UL us | c ETL us

Item	Description	W	V	Bulb Shape	Base	Finish	CCT	Lm	CRI	MOL (in.)	MOD (in.)	Life (hrs.)	UPC	Pack
40 Watt Replacement														
S21248	4G40/CL/LED/E26/927/120V	4	120	G40	E26	CL	2700K	350	90	6.54	4.88	15K	045923205637	24/6
S12484	4G40/CL/LED/E26/930/120V	4	120	G40	E26	CL	3000K	350	90	6.54	4.88	15K	0459232124846	24/6
S21249	4G40/CL/LED/E26/940/120V	4	120	G40	E26	CL	4000K	350	90	6.54	4.88	15K	045923205644	24/6
S21250	4.5G40/WH/LED/E26/927/120V	4.5	120	G40	E26	WH	2700K	350	90	6.54	4.88	15K	045923205651	24/6
S21251	4.5G40/WH/LED/E26/940/120V	4.5	120	G40	E26	WH	4000K	350	90	6.54	4.88	15K	045923205668	24/6
60 Watt Replacement														
S21252	6G40/CL/LED/E26/927/120V	6	120	G40	E26	CL	2700K	500	90	6.54	4.88	15K	045923205675	24/6
S21253	6G40/CL/LED/E26/930/120V	6	120	G40	E26	CL	3000K	500	90	6.54	4.88	15K	045923205682	24/6
S12485	6G40/CL/LED/E26/935/120V	6	120	G40	E26	CL	3500K	500	90	6.54	4.88	15K	0459232124853	24/6
S21254	6G40/CL/LED/E26/940/120V	6	120	G40	E26	CL	4000K	500	90	6.54	4.88	15K	045923205699	24/6
S12486	6G40/CL/LED/E26/950/120V	6	120	G40	E26	CL	5000K	500	90	6.54	4.88	15K	0459232124860	24/6
S21255	6G40/WH/LED/E26/927/120V	6	120	G40	E26	WH	2700K	500	90	6.54	4.88	15K	045923205705	24/6
S21256	6G40/WH/LED/E26/930/120V	6	120	G40	E26	WH	3000K	500	90	6.54	4.88	15K	045923205712	24/6
S21257	6G40/WH/LED/E26/940/120V	6	120	G40	E26	WH	4000K	500	90	6.54	4.88	15K	045923205729	24/6
S12487	8G40/CL/LED/E26/927/120V	6	120	G40	E26	WH	2700K	800	90	6.54	4.88	15K	045923124877	24/6
100 Watt Replacement														
S12545	8G40/SLVR/LED/927/120V	8	120	G40	E26	SLV	2700K	800	90	6.97	4.92	15K	045923125454	12/6
S12546	8G40/GOLD/LED/927/120V	8	120	G40	E26	GLD	2700K	800	90	6.97	4.92	15K	045923125461	12/6
S21258**	8G40/CL/LED/E26/930/120V	8	120	G40	E26	CL	3000K	800	90	6.54	4.88	15K	045923205736	24/6
S12488	8G40/CL/LED/E26/935/120V	8	120	G40	E26	CL	3500K	800	90	6.54	4.88	15K	045923124884	24/6
S21259**	8G40/CL/LED/E26/940/120V	8	120	G40	E26	CL	4000K	800	90	6.54	4.88	15K	045923205743	24/6
S12489	8G40/CL/LED/E26/950/120V	8	120	G40	E26	CL	5000K	800	90	6.54	4.88	15K	045923124891	24/6
S21260	8G40/WH/LED/E26/930/120V	8	120	G40	E26	WH	3000K	800	90	6.54	4.88	15K	045923205750	24/6
S21261	8G40/WH/LED/E26/940/120V	8	120	G40	E26	WH	4000K	800	90	6.54	4.88	15K	045923205767	24/6

^See warranty for details at www.satco.com

Product sheet SA1980

© Satco Products, Inc. All rights reserved.

LED FILAMENT LAMPS
DECORATIVE - CANDELABRA BASE/TORPEDO SHAPE



Features:

- Filament style LED with a traditional incandescent look and feel
- Omni-directional light source
- Dimmable
- Wet location
- Approved for totally enclosed fixtures^
- c-UL-us/c-ETL-us listed
- CEC T20*
- 3 year warranty



B11 Clear

B11 Frost



Item	Description	W	V	Bulb Shape	Base	Finish	CCT	Lm	CRI	MOL (in.)	MOD (in.)	Life (hrs.)	UPC	Pack
25 Watt Replacement														
S21262	3B11/LED/927/CL/120V/E12	3	120	B11	E12	CL	2700K	200	90	3.97	1.38	15K	045923205774	24/6
S12490*	3B11/LED/930/CL/120V/E12	3	120	B11	E12	CL	3000K	200	90	3.97	1.38	15K	045923124907	24/6
S21263	3B11/LED/927/FR/120V/E12	3	120	B11	E12	FR	2700K	200	90	3.97	1.38	15K	045923205781	24/6
S12491	3B11/LED/930/FR/120V/E12	3	120	B11	E12	FR	3000K	200	90	3.97	1.38	15K	045923124914	24/6
25 Watt Replacement E12-Carded														
S21817	3B11/LED/927/CL/120V/E12/2CD	3	120	B11	E12	CL	2700K	200	90	3.97	1.38	15K	045923218170	24/12
S21818	3B11/LED/927/FR/120V/E12/2CD	3	120	B11	E12	FR	2700K	200	90	3.97	1.38	15K	045923218187	24/12
40 Watt Replacement														
S21264	4B11/LED/927/CL/120V/E12	4	120	B11	E12	CL	2700K	350	90	3.97	1.38	15K	045923205798	24/6
S21265	4B11/LED/930/CL/120V/E12	4	120	B11	E12	CL	3000K	350	90	3.97	1.38	15K	045923205804	24/6
S21266	4B11/LED/935/CL/120V/E12	4	120	B11	E12	CL	3500K	350	90	3.97	1.38	15K	045923205811	24/6
S21267	4B11/LED/940/CL/120V/E12	4	120	B11	E12	CL	4000K	350	90	3.97	1.38	15K	045923205828	24/6

Continued next page

Item	Description	W	V	Bulb Shape	Base	Finish	CCT	Lm	CRI	MOL (in.)	MOD (in.)	Life (hrs.)	UPC	Pack
40 Watt Replacement (cont.)														
S21268	4B11/LED/950/CL/120V/E12	4	120	B11	E12	CL	5000K	350	90	3.97	1.38	15K	045923205835	24/6
S21269	4B11/LED/927/FR/120V/E12	4	120	B11	E12	FR	2700K	350	90	3.97	1.38	15K	045923205842	24/6
S21270	4B11/LED/930/FR/120V/E12	4	120	B11	E12	FR	3000K	350	90	3.97	1.38	15K	045923205859	24/6
S21271	4B11/LED/940/FR/120V/E12	4	120	B11	E12	FR	4000K	350	90	3.97	1.38	15K	045923205866	24/6
S21272	4B11/LED/950/FR/120V/E12	4	120	B11	E12	FR	5000K	350	90	3.97	1.38	15K	045923205873	24/6
S29877*	4.5B11/LED/927/CL/120V/E12	4.5	120	B11	E12	CL	2700K	350	90	3.75	1.25	15K	045923298776	24/6
40 Watt Multi-Pack-Box														
S21366	4B11/LED/927/CL/120V/E12/3PK	4	120	B11	E12	CL	2700K	350	90	3.97	1.38	15K	045923206733	24/3pks
S21367	4B11/LED/930/CL/120V/E12/3PK	4	120	B11	E12	CL	3000K	350	90	3.97	1.38	15K	045923206740	24/3pks
S12492	4B11/LED/930/CL/120V/E12/10PK	4	120	B11	E12	CL	3000K	350	90	3.97	1.38	15K	045923124941	12/10
S12493	4B11/LED/950/CL/120V/E12/10PK	4	120	B11	E12	CL	5000K	350	90	3.97	1.38	15K	045923124938	12/10
40 Watt Replacement E14														
S12115	4.5W/TORP/EURO-E14/CL/120V	4.5	120	B11	E14	CL	3000K	350	80	3.88	1.38	15K	045923121159	24/6
S12116	4.5W/TORP/EURO-E14/CL/120V	4.5	120	B11	E14	CL	4000K	350	80	3.88	1.38	15K	045923121166	24/6
S12117	4.5W/TORP/EURO-E14/FR/120V	4.5	120	B11	E14	FR	3000K	350	80	3.88	1.38	15K	045923121173	24/6
S12118	4.5W/TORP/EURO-E14/FR/120V	4.5	120	B11	E14	FR	4000K	350	80	3.88	1.38	15K	045923121180	24/6
40 Watt Replacement E12-Carded														
S21819	4B11/LED/927/CL/120V/E12/2CD	4	120	B11	E12	CL	2700K	350	90	3.97	1.38	15K	045923218194	24/12
S21820	4B11/LED/930/CL/120V/E12/2CD	4	120	B11	E12	CL	3000K	350	90	3.97	1.38	15K	045923218200	24/12
S21821	4B11/LED/930/CL/120V/E12/4CD	4	120	B11	E12	CL	3000K	350	90	3.97	1.38	15K	045923218217	24/12
S21822	4B11/LED/950/CL/120V/E12/2CD	4	120	B11	E12	CL	5000K	350	90	3.97	1.38	15K	045923218224	24/12
S21823	4B11/LED/927/FR/120V/E12/2CD	4	120	B11	E12	FR	2700K	350	90	3.97	1.38	15K	045923218231	24/12
S21824	4B11/LED/930/FR/120V/E12/2CD	4	120	B11	E12	FR	3000K	350	90	3.97	1.38	15K	045923218248	24/12
S21825	4B11/LED/930/FR/120V/E12/4CD	4	120	B11	E12	FR	3000K	350	90	3.97	1.38	15K	045923218255	24/12
S21826	4B11/LED/950/FR/120V/E12/2CD	4	120	B11	E12	FR	5000K	350	90	3.97	1.38	15K	045923218262	24/12
60 Watt Replacement														
S21273	5.5B11/LED/927/CL/120V/E12	5.5	120	B11	E12	CL	2700K	500	90	3.97	1.38	15K	045923205880	24/6
S21274	5.5B11/LED/930/CL/120V/E12	5.5	120	B11	E12	CL	3000K	500	90	3.97	1.38	15K	045923205897	24/6
S21275	5.5B11/LED/935/CL/120V/E12	5.5	120	B11	E12	CL	3500K	500	90	3.97	1.38	15K	045923205903	24/6
S21276	5.5B11/LED/940/CL/120V/E12	5.5	120	B11	E12	CL	4000K	500	90	3.97	1.38	15K	045923205910	24/6
S21277	5.5B11/LED/950/CL/120V/E12	5.5	120	B11	E12	CL	5000K	500	90	3.97	1.38	15K	045923205927	24/6
S21278	5.5B11/LED/927/FR/120V/E12	5.5	120	B11	E12	FR	2700K	500	90	3.97	1.38	15K	045923205934	24/6
S21279	5.5B11/LED/930/FR/120V/E12	5.5	120	B11	E12	FR	3000K	500	90	3.97	1.38	15K	045923205941	24/6
S21280	5.5B11/LED/940/FR/120V/E12	5.5	120	B11	E12	FR	4000K	500	90	3.97	1.38	15K	045923205958	24/6
S21281	5.5B11/LED/950/FR/120V/E12	5.5	120	B11	E12	FR	5000K	500	90	3.97	1.38	15K	045923205965	24/6
60 Watt Replacement Multi-Pack Box														
S12494	5.5B11/LED/930/CL/120V/E12/10PK	5.5	120	B11	E12	CL	3000K	500	90	3.97	1.38	15K	045923124945	12/10
S12495	5.5B11/LED/950/CL/120V/E12/10PK	5.5	120	B11	E12	CL	5000K	500	90	3.97	1.38	15K	045923124952	12/10
60 Watt Replacement E12-Carded														
S21827	5.5B11/LED/927/CL/120V/E12/2CD	5.5	120	B11	E12	CL	2700K	500	90	3.97	1.38	15K	045923218279	24/12
S21828	5.5B11/LED/930/CL/120V/E12/2CD	5.5	120	B11	E12	CL	3000K	500	90	3.97	1.38	15K	045923218286	24/12
S21829	5.5B11/LED/950/CL/120V/E12/2CD	5.5	120	B11	E12	CL	5000K	500	90	3.97	1.38	15K	045923128295	24/12
S21830	5.5B11/LED/927/FR/120V/E12/2CD	5.5	120	B11	E12	FR	2700K	500	90	3.97	1.38	15K	045923218309	24/12
S21831	5.5B11/LED/950/FR/120V/E12/2CD	5.5	120	B11	E12	FR	5000K	500	90	3.97	1.38	15K	045923218316	24/12
75 Watt Replacement														
S11383	8B11/CTC/LED/927/120V/E12	8	120	B11	E12	CL	2700K	760	90	3.86	1.38	15K	045923113833	24/6
S11385	8B11/CTC/LED/930/120V/E12	8	120	B11	E12	CL	3000K	760	90	3.86	1.38	15K	045923113857	24/6
S12496	8B11/CTC/LED/935/120V/E12	8	120	B11	E12	CL	3500K	760	90	3.86	1.38	15K	045923124969	24/6
S11344	8B11/CTC/LED/940/120V/E12	8	120	B11	E12	CL	4000K	760	90	3.86	1.38	15K	045923113444	24/6
S11345	8B11/CTC/LED/950/120V/E12	8	120	B11	E12	CL	5000K	760	90	3.86	1.38	15K	045923113451	24/6
S11384	8B11/CTF/LED/927/120V/E12	8	120	B11	E12	FR	2700K	760	90	3.86	1.38	15K	045923113840	24/6
S11346	8B11/CTF/LED/930/120V/E12	8	120	B11	E12	FR	3000K	760	90	3.86	1.38	15K	045923113468	24/6
S12497	8B11/CTF/LED/940/120V/E12	8	120	B11	E12	FR	4000K	760	90	3.86	1.38	15K	045923124976	24/6
S12498	8B11/CTF/LED/950/120V/E12	8	120	B11	E12	FR	5000K	760	90	3.86	1.38	15K	045923124983	24/6

^See warranty for details at www.satco.com

Product sheet SA1980

© Satco Products, Inc. All rights reserved.

LED CANDELABRA DUSK-TO-DAWN

Features:

- Built-in photocell sensor ensures that these bulbs automatically turn on at dusk and off at dawn, making them energy efficient and low maintenance
- Enhance safety and security with lights that turn ON only when it's dark enough to be needed
- Clear glass bulb with internal filaments for a classic look with updated energy savings
- Available in 2700K and 5000K CCT options for warm or natural illumination, improving safety and ambiance



LED CANDELABRA DUSK-TO-DAWN



Item	Description	W	V	Bulb Shape	Base	CCT	Lm	MOL (in.)	MOD (in.)	Life/ Hrs.	UPC	Pack
60 Watt Replacement												
S11477	5B11/DUSK/DAWN/927	5	120	B11	E12	2700K	500	4.02	1.38	15,000	045923114779	48/12
S11478	5B11/DUSK/DAWN/950	5	120	B11	E12	5000K	500	4.02	1.38	15,000	045923114786	48/12

Product sheet SN1685

© Satco Products, Inc. All rights reserved.

LED FILAMENT LAMPS
DECORATIVE - MEDIUM BASE/TORPEDO

Features:

- LED with a traditional incandescent look and feel
- Omni-directional light source
- Dimmable
- Wet location
- Approved for totally enclosed fixtures^
- c-UL-us/c-ETL-us listed
- CEC T20
- 3 year warranty



LED FILAMENT LAMPS
DECORATIVE - MEDIUM BASE/TORPEDO

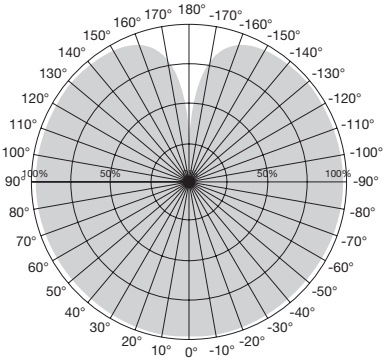

Beam Angle: 300°



B11 Clear



B11 Frost

Item	Description	W	V	Bulb Shape	Base	Finish	CCT	Lm	CRI	MOL (in.)	MOD (in.)	Life (hrs.)	UPC	Pack
25 Watt Replacement														
S21282	3B11/LED/927/CL/120V/E26	3	120	B11	E26	CL	2700K	250	90	3.58	1.38	15K	045923124990	24/6
S12499	3B11/LED/930/CL/120V/E26	3	120	B11	E26	CL	3000K	250	90	3.58	1.38	15K	045923205972	24/6
S21283	3B11/LED/927/FR/120V/E26	3	120	B11	E26	FR	2700K	250	90	3.58	1.38	15K	045923205989	24/6
25 Watt Replacement E26-Carded														
S21832	3B11/LED/927/CL/120V/E26/2CD	3	120	B11	E26	CL	2700K	250	90	3.58	1.38	15K	045923218323	24/12
S21833	3B11/LED/927/FR/120V/E26/2CD	3	120	B11	E26	FR	2700K	250	90	3.58	1.38	15K	045923218330	24/12
40 Watt Replacement														
S21284	4B11/LED/927/CL/120V/E26	4	120	B11	E26	CL	2700K	350	90	3.58	1.38	15K	045923205996	24/6
S21285	4B11/LED/930/CL/120V/E26	4	120	B11	E26	CL	3000K	350	90	3.58	1.38	15K	045923206009	24/6
S12500	4B11/LED/935/CL/120V/E26	4	120	B11	E26	CL	3500K	350	90	3.58	1.38	15K	045923125003	24/6
S21286	4B11/LED/940/CL/120V/E26	4	120	B11	E26	CL	4000K	350	90	3.58	1.38	15K	045923206016	24/6
S12501	4B11/LED/950/CL/120V/E26	4	120	B11	E26	CL	5000K	350	90	3.58	1.38	15K	045923125010	24/6
S21287	4B11/LED/927/FR/120V/E26	4	120	B11	E26	FR	2700K	350	90	3.58	1.38	15K	045923206023	24/6
S21288	4B11/LED/930/FR/120V/E26	4	120	B11	E26	FR	3000K	350	90	3.58	1.38	15K	045923206030	24/6
S21289	4B11/LED/940/FR/120V/E26	4	120	B11	E26	FR	4000K	350	90	3.58	1.38	15K	045923206047	24/6
S21368	4B11/LED/927/CL/120V/E26	4	120	B11	E26	CL	2700K	350	90	3.58	1.38	15K	045923206757	24/6
S21369	4B11/LED/930/CL/120V/E26	4	120	B11	E26	CL	3000K	350	90	3.58	1.38	15K	045923206764	24/6
40 Watt Replacement-Carded														
S21879	4B11/LED/950/CL/120V/E26/2CD	4	120	B11	E26	CL	5000K	350	90	3.58	1.38	15K	045923218798	24/12
S21880	4B11/LED/950/FR/120V/E26/2CD	4	120	B11	E26	FR	5000K	350	90	3.58	1.38	15K	045923218804	24/12
S21834	4B11/LED/927/CL/120V/E26/2CD	4	120	B11	E26	CL	2700K	350	90	3.58	1.38	15K	045923218347	24/12
S21835	4B11/LED/930/CL/120V/E26/2CD	4	120	B11	E26	CL	3000K	350	90	3.58	1.38	15K	045923218354	24/12
S21836	4B11/LED/927/FR/120V/E26/2CD	4	120	B11	E26	FR	2700K	350	90	3.58	1.38	15K	045923218361	24/12
60 Watt Replacement														
S21290	5.5B11/LED/927/CL/120V/E26	5.5	120	B11	E26	CL	2700K	500	90	3.58	1.38	15K	045923206054	24/6
S12502	5.5B11/LED/930/CL/120V/E26	5.5	120	B11	E26	CL	3000K	500	90	3.58	1.38	15K	045923125027	24/6
S12503	5.5B11/LED/935/CL/120V/E26	5.5	120	B11	E26	CL	3500K	500	90	3.58	1.38	15K	045923125034	24/6
S21291	5.5B11/LED/940/CL/120V/E26	5.5	120	B11	E26	CL	4000K	500	90	3.58	1.38	15K	045923206061	24/6
S12504	5.5B11/LED/950/CL/120V/E26	5.5	120	B11	E26	CL	5000K	500	90	3.58	1.38	15K	045923125041	24/6
S21292	5.5B11/LED/927/FR/120V/E26	5.5	120	B11	E26	FR	2700K	500	90	3.58	1.38	15K	045923206078	24/6
S21293	5.5B11/LED/940/FR/120V/E26	5.5	120	B11	E26	FR	4000K	500	90	3.58	1.38	15K	045923206085	24/6
60 Watt Replacement-Carded														
S21837	5.5B11/LED/927/CL/120V/E26/2CD	5.5	120	B11	E26	CL	2700K	500	90	3.58	1.38	15K	045923218378	24/12
S21881	5.5B11/LED/950/CL/120V/E26/2CD	5.5	120	B11	E26	CL	5000K	500	90	3.58	1.38	15K	045923218811	24/12
S21838	5.5B11/LED/927/FR/120V/E26/2CD	5.5	120	B11	E26	FR	2700K	500	90	3.58	1.38	15K	045923218385	24/12
S21882	5.5B11/LED/950/FR/120V/E26/2CD	5.5	120	B11	E26	FR	5000K	500	90	3.58	1.38	15K	045923218828	24/12

ˆSee warranty for details at www.satco.com

Product sheet SA1980

© Satco Products, Inc. All rights reserved.

LED FILAMENT LAMPS
PRISMATIC CHANDELIER & DECORATIVE-FLAME TIP



Features:

- LED with a traditional incandescent look and feel
- Omni-directional light source
- Dimmable
- Damp and wet location
- Approved for totally enclosed fixtures^
- c-ETL-us or cULus listed
- 3 year warranty





LED FILAMENT LAMPS
PRISMATIC CHANDELIER & DECORATIVE-FLAME TIP


HX11 E12 Clear


HX11 E12 Frost


HX11 E12 Aurora


CA10 E12 Clear


CA10 E12 Frost

Item	Description	W	V	Bulb Shape	Base	Finish	CCT	Lm	CRI	MOL (in.)	MOD (in.)	Life (hrs.)	UPC	Pack
25 Watt Replacement														
S21294	3CA10/LED/927/CL/120V/E12	3	120	CA10	E12	CL	2700K	200	90	4.72	1.38	15K	045923206092	24/6
S12505	3CA10/LED/930/CL/120V/E12	3	120	CA10	E12	CL	3000K	200	90	4.72	1.38	15K	045923125058	24/6
S21295	3CA10/LED/927/FR/120V/E12	3	120	CA10	E12	FR	2700K	200	90	4.72	1.38	15K	045923206108	24/6
25 Watt Replacement														
S12140	2HEX11/LED/CL/827/E12/120V/2CD	2	120	HX11	E12	CL	2700K	150	80	4.73	1.26	15K	045923121401	24/12
S12141	2HEX11/LED/FR/827/E12/120V/2CD	2	120	HX11	E12	FR	2700K	150	80	4.73	1.26	15K	045923121418	24/12
S12142	2HEX11/LED/AU/827/E12/120V/2CD	2	120	HX11	E12	AU	2700K	150	80	4.73	1.26	15K	045923121425	24/12
S21839	3CA10/LED/927/CL/120V/E12/2CD	3	120	CA10	E12	CL	2700K	200	90	4.72	1.38	15K	045923218392	24/12
40 Watt Replacement														
S21296	4CA10/LED/927/CL/120V/E12	4	120	CA10	E12	CL	2700K	350	90	4.72	1.38	15K	045923206115	24/6
S21297	4CA10/LED/930/CL/120V/E12	4	120	CA10	E12	CL	3000K	350	90	4.72	1.38	15K	045923206122	24/6
S12506	4CA10/LED/935/CL/120V/E12	4	120	CA10	E12	CL	3500K	350	90	4.72	1.38	15K	045923125065	24/6
S21298	4CA10/LED/940/CL/120V/E12	4	120	CA10	E12	CL	4000K	350	90	4.72	1.38	15K	045923206139	24/6
S21299	4CA10/LED/950/CL/120V/E12	4	120	CA10	E12	CL	5000K	350	90	4.72	1.38	15K	045923206146	24/6
S21300	4CA10/LED/927/FR/120V/E12	4	120	CA10	E12	FR	2700K	350	90	4.72	1.38	15K	045923206153	24/6
S21301	4CA10/LED/930/FR/120V/E12	4	120	CA10	E12	FR	3000K	350	90	4.72	1.38	15K	045923206160	24/6
S12507	4CA10/LED/935/FR/120V/E12	4	120	CA10	E12	FR	3500K	350	90	4.72	1.38	15K	045923125072	24/6
S21302	4CA10/LED/940/FR/120V/E12	4	120	CA10	E12	FR	4000K	350	90	4.72	1.38	15K	045923206177	24/6
S21303	4CA10/LED/950/FR/120V/E12	4	120	CA10	E12	FR	5000K	350	90	4.72	1.38	15K	045923206184	24/6
40 Watt Replacement-Carded														
S21840	4CA10/LED/927/CL/120V/E12/2CD	4	120	CA10	E12	CL	2700K	350	90	4.72	1.38	15K	045923218408	24/12
S21841	4CA10/LED/930/CL/120V/E12/2CD	4	120	CA10	E12	CL	3000K	350	90	4.72	1.38	15K	045923218415	24/12
S21842	4CA10/LED/950/CL/120V/E12/2CD	4	120	CA10	E12	CL	5000K	350	90	4.72	1.38	15K	045923218422	24/12
S21843	4CA10/LED/927/FR/120V/E12/2CD	4	120	CA10	E12	FR	2700K	350	90	4.72	1.38	15K	045923218439	24/12
S21844	4CA10/LED/930/FR/120V/E12/2CD	4	120	CA10	E12	FR	3000K	350	90	4.72	1.38	15K	045923218446	24/12
S21845	4CA10/LED/950/FR/120V/E12/2CD	4	120	CA10	E12	FR	5000K	350	90	4.72	1.38	15K	045923218453	24/12
60 Watt Replacement														
S21304	5.5CA10/LED/927/CL/120V/E12	5.5	120	CA10	E12	CL	2700K	500	90	4.72	1.38	15K	045923206191	24/6
S21305	5.5CA10/LED/930/CL/120V/E12	5.5	120	CA10	E12	CL	3000K	500	90	4.72	1.38	15K	045923206207	24/6
S12508	5.5CA10/LED/935/CL/120V/E12	5.5	120	CA10	E12	CL	3500K	500	90	4.72	1.38	15K	045923125089	24/6
S21306	5.5CA10/LED/940/CL/120V/E12	5.5	120	CA10	E12	CL	4000K	500	90	4.72	1.38	15K	045923206214	24/6
S12509	5.5CA10/LED/950/CL/120V/E12	5.5	120	CA10	E12	CL	5000K	500	90	4.72	1.38	15K	045923125096	24/6
S21307	5.5CA10/LED/927/FR/120V/E12	5.5	120	CA10	E12	FR	2700K	500	90	4.72	1.38	15K	045923206221	24/6
S21308	5.5CA10/LED/930/FR/120V/E12	5.5	120	CA10	E12	FR	3000K	500	90	4.72	1.38	15K	045923206238	24/6
S21309	5.5CA10/LED/940/FR/120V/E12	5.5	120	CA10	E12	FR	4000K	500	90	4.72	1.38	15K	045923206245	24/6
60 Watt Replacement-Carded														
S21846	5.5CA10/LED/927/CL/120V/E12/2CD	5.5	120	CA10	E12	CL	2700K	500	90	4.72	1.38	15K	045923218460	24/12
S21883	5.5CA10/LED/950/CL/120V/E12/2CD	5.5	120	CA10	E12	CL	5000K	500	90	4.72	1.38	15K	045923218835	24/12
S21847	5.5CA10/LED/927/FR/120V/E12/2CD	5.5	120	CA10	E12	FR	2700K	500	90	4.72	1.38	15K	045923218477	24/12
S21884	5.5CA10/LED/950/FR/120V/E12/2CD	5.5	120	CA10	E12	FR	5000K	500	90	4.72	1.38	15K	045923218842	24/12

ˆSee warranty for details at www.satco.com

Product sheet SN1664

© Satco Products, Inc. All rights reserved.

LED FILAMENT LAMPS
DECORATIVE - MEDIUM BASE FLAME TIP

Features:

- LED with a traditional incandescent look and feel
- Omni-directional light source
- Dimmable
- Wet location
- Approved for totally enclosed fixtures^
- 3 year warranty



LED FILAMENT LAMPS
DECORATIVE - MEDIUM BASE FLAME TIP



CA11 E26 Clear



CA11 E26 Frost

Item	Description	W	V	Bulb Shape	Base	Finish	CCT	Lm	CRI	MOL (in.)	MOD (in.)	Life (hrs.)	UPC	Pack
25 Watt Replacement														
S21310	3CA10/LED/927/CL/120V/E26	3	120	CA10	E26	CL	2700K	250	90	4.33	1.38	15K	045923206252	24/6
S12510	3CA10/LED/930/CL/120V/E26	3	120	CA10	E26	CL	3000K	250	90	4.33	1.38	15K	045923125102	24/6
S21311	3CA10/LED/927/FR/120V/E26	3	120	CA10	E26	FR	2700K	250	90	4.33	1.38	15K	045923206269	24/6
25 Watt Replacement-Carded														
S21848	3CA10/LED/927/CL/120V/E26/2CD	3	120	CA10	E26	CL	2700K	250	90	4.33	1.38	15K	045923218484	24/12
40 Watt Replacement														
S21312	4CA10/LED/927/CL/120V/E26	4	120	CA10	E26	CL	2700K	350	90	4.33	1.38	15K	045923206276	24/6
S21313	4CA10/LED/930/CL/120V/E26	4	120	CA10	E26	CL	3000K	350	90	4.33	1.38	15K	045923206283	24/6
S21314	4CA10/LED/940/CL/120V/E26	4	120	CA10	E26	CL	4000K	350	90	4.33	1.38	15K	045923206290	24/6
S12511	4CA10/LED/950/CL/120V/E26	4	120	CA10	E26	CL	5000K	350	90	4.33	1.38	15K	045923125119	24/6
S21315	4CA10/LED/927/FR/120V/E26	4	120	CA10	E26	CL	2700K	350	90	4.33	1.38	15K	045923206306	24/6
S21316	4CA10/LED/930/FR/120V/E26	4	120	CA10	E26	FR	3000K	350	90	4.33	1.38	15K	045923206313	24/6
S21317	4CA10/LED/940/FR/120V/E26	4	120	CA10	E26	FR	4000K	350	90	4.33	1.38	15K	045923206320	24/6
40 Watt Replacement-Carded														
S21849	4CA10/LED/927/CL/120V/E26/2CD	4	120	CA10	E26	CL	2700K	350	90	4.33	1.38	15K	045923218491	24/12
S21850	4CA10/LED/930/CL/120V/E26/2CD	4	120	CA10	E26	CL	3000K	350	90	4.33	1.38	15K	045923218507	24/12
S21885	4CA10/LED/950/CL/120V/E26/2CD	4	120	CA10	E26	CL	5000K	350	90	4.33	1.38	15K	045923218859	24/12
S21851	4CA10/LED/927/FR/120V/E26/2CD	4	120	CA10	E26	FR	2700K	350	90	4.33	1.38	15K	045923218514	24/12
S21886	4CA10/LED/950/FR/120V/E26/2CD	4	120	CA10	E26	FR	5000K	350	90	4.33	1.38	15K	045923218866	24/12
60 Watt Replacement														
S21318	5.5CA10/LED/927/CL/120V/E26	5.5	120	CA10	E26	CL	2700K	500	90	4.33	1.38	15K	045923206337	24/6
S12512	5.5CA10/LED/930/CL/120V/E26	5.5	120	CA10	E26	CL	3000K	500	90	4.33	1.38	15K	045923125126	24/6
S21319	5.5CA10/LED/940/CL/120V/E26	5.5	120	CA10	E26	CL	4000K	500	90	4.33	1.38	15K	045923206344	24/6
S12513	5.5CA10/LED/950/CL/120V/E26	5.5	120	CA10	E26	CL	5000K	500	90	4.33	1.38	15K	045923125133	24/6
S21320	5.5CA10/LED/927/FR/120V/E26	5.5	120	CA10	E26	FR	2700K	500	90	4.33	1.38	15K	045923206351	24/6
S21321	5.5CA10/LED/940/FR/120V/E26	5.5	120	CA10	E26	FR	4000K	500	90	4.33	1.38	15K	045923206368	24/6
60 Watt Replacement-Carded														
S21852	5.5CA10/LED/927/CL/120V/E26/2CD	5.5	120	CA10	E26	CL	2700K	500	90	4.33	1.38	15K	045923218521	24/12
S21887	5.5CA10/LED/950/CL/120V/E26/2CD	5.5	120	CA10	E26	CL	5000K	500	90	4.33	1.38	15K	045923218873	24/12
S21853	5.5CA10/LED/927/FR/120V/E26/2CD	5.5	120	CA10	E26	FR	2700K	500	90	4.33	1.38	15K	045923218538	24/12
S21888	5.5CA10/LED/950/FR/120V/E26/2CD	5.5	120	CA10	E26	FR	5000K	500	90	4.33	1.38	15K	045923218880	24/12

^See warranty for details at www.satco.com

Product sheet SA1980

© Satco Products, Inc. All rights reserved.

SATCO-ESCENT®
LED LAMPS



Features:

- 2 watt LED direct replacement for 25 watt incandescent lamps
- 4 watt LED direct replacement for 40 watt incandescent lamps
- Unique satin-spun white or amber finish
- Dimmable
- Carded versions for peg board merchandising
- LED filament technology
- Approved for totally enclosed fixtures^
- Long life—15,000 hours
- 3 year warranty





SATCO-ESCENT®
LED LAMPS

Satin Finish



S23403
S22703



S11300, S11302
S11304, S11306



S23413
S22713

Amber Finish



S23407
S22707



S11301, S11303
S11305, S11307



S23412
S22712

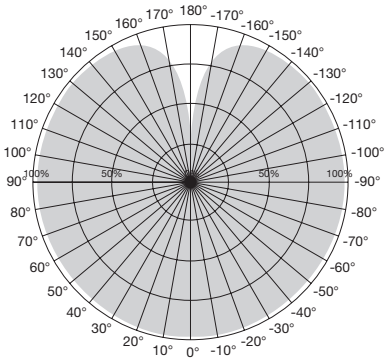

300° Illumination

DIMMABLE ^ ENCLOSED FIXTURE DAMP LOCATION c UL US

Item	Description	W	V	Bulb Shape	Base	Finish	CCT	Lm	CRI	MOL (in.)	MOD (in.)	Life (hrs.)	UPC	Pack
Boxed														
S11300	2CA11/LED/SA/E12/27K/120V	2	120	CA11	E12	SPUN STN	2700K	150	80	4.00	1.38	15K	045923113000	24/6
S11301	2CA11/LED/A/E12/21K/120V	2	120	CA11	E12	SPUN AMB	2100K	100	80	4.00	1.38	15K	045923113017	24/6
S11302	4CA11/LED/SA/E12/27K/120V	4	120	CA11	E12	SPUN STN	2700K	300	80	4.00	1.38	15K	045923113024	24/6
S11303	4CA11/LED/A/E12/21K/120V	4	120	CA11	E12	SPUN AMB	2100K	200	80	4.00	1.38	15K	045923113031	24/6
S23403	2C11/LED/SA/E26/27K/120V	2	120	C11	E26	SPUN STN	2700K	120	80	3.81	1.38	15K	045923234033	24/6
S23407	2C11/LED/A/E26/21K/120V	2	120	C11	E26	SPUN AMB	2100K	100	80	3.81	1.38	15K	045923234071	24/6
S23413	4C15/LED/SA/E26/27K/120V	4	120	C15	E26	SPUN STN	2700K	300	80	4.38	1.88	15K	045923234132	24/6
S23412	4C15/LED/A/E26/21K/120V	4	120	C15	E26	SPUN AMB	2100K	240	80	4.38	1.88	15K	045923234125	24/6
Carded														
S11304	2CA11/LED/SA/E12/27K/120V/CD	2	120	CA11	E12	SPUN STN	2700K	150	80	4.00	1.38	15K	045923113048	24/12
S11305	2CA11/LED/A/E12/21K/120V/CD	2	120	CA11	E12	SPUN AMB	2100K	100	80	4.00	1.38	15K	045923113055	24/12
S11306	4CA11/LED/SA/E12/27K/120V/CD	4	120	CA11	E12	SPUN STN	2700K	300	80	4.00	1.38	15K	045923113062	24/12
S11307	4CA11/LED/A/E12/21K/120V/CD	4	120	CA11	E12	SPUN AMB	2100K	200	80	4.00	1.38	15K	045923113079	24/12
S22703	2C11/LED/SA/E26/27K/120V/CD	2	120	C11	E26	SPUN STN	2700K	120	80	3.81	1.38	15K	045923227035	24/12
S22707	2C11/LED/A/E26/21K/120V/CD	2	120	C11	E26	SPUN AMB	2100K	100	80	3.81	1.38	15K	045923227073	24/12
S22713	4C15/LED/SA/E26/27K/120V/CD	4	120	C15	E26	SPUN STN	2700K	300	80	4.38	1.88	15K	045923227134	24/12
S22712	4C15/LED/A/E26/21K/120V/CD	4	120	C15	E26	SPUN AMB	2100K	240	80	4.38	1.88	15K	045923227127	24/12

^See warranty for details at www.satco.com

Product sheet SA2320

© Satco Products, Inc. All rights reserved.

SATCO-ESCENT®
DECORATIVE LAMPS

Features:

- Satin spun finish reduces glare
- Decorative soft glowing light
- 360° omni-directional light
- Unique bulb shape



SATCO-ESCENT®
DECORATIVE LAMPS



S11313

S11312

Item	Description	W	V	Bulb Shape	Base	Finish	CCT	Lm	CRI	MOL (in.)	MOD (in.)	Life (hrs.)	UPC	Pack
S11312	7H19/SS/LED/820/E26/120V	7	120	H19	E26	SPUN STN	2000K	800	82	6.06	2.36	15K	045923113123	24/6
S11313	7H19/SS/LED/830/E26/120V	7	120	H19	E26	SPUN STN	3000K	800	82	6.06	2.36	15K	045923113130	24/6
S11314	7H19/SS/LED/850/E26/120V	7	120	H19	E26	SPUN STN	5000K	800	82	6.06	2.36	15K	045923113147	24/6

See warranty for details at www.satco.com

Product sheet SN1716

© Satco Products, Inc. All rights reserved.

LED FILAMENT SPECIALTY LAMPS





C7 E12



BT15 E26

Features:

- LED with a traditional incandescent look and feel
- Omni-directional light source
- Dimmable
- Wet or damp location
- Approved for totally enclosed fixtures^
- c-ETL-us listed or CEC T20
- 3 year warranty







T6 E17

DIMMABLE | WET LOCATION | ENCLOSED FIXTURE | 3 YEAR WARRANTY | Intertek | FC | RoHS COMPLIANT

Item	Description	W	V	Bulb Shape	Base	Finish	CCT	Lm	CRI	MOL (in.)	MOD (in.)	Life (hrs.)	Pack
7 Watt Replacement													
S11308**†	0.7W/C7/CL/LED/120V/2CD	0.7	120	C7	E12	CL	2700K	30	80	2.13	0.84	15K	24/12
Tubular-Carded													
S12114	3.5T7/LED/CL/E17/3K/120V/1CD	3.5	120	T6	E17	CL	3000K	350	80	2.68	1.00	15K	100/10
BT15													
40 Watt Replacement													
S21330	5BT15/CL/LED/927/120V	5	120	BT15	E26	CL	2700K	450	90	4.06	1.81	15K	24/6
S21331	5BT15/CL/LED/940/120V	5	120	BT15	E26	CL	4000K	450	90	4.06	1.81	15K	24/6
S21332	5BT15/WH/LED/927/120V	5	120	BT15	E26	WH	2700K	450	90	4.06	1.81	15K	24/6
S21333	5BT15/WH/LED/940/120V	5	120	BT15	E26	WH	4000K	450	90	4.06	1.81	15K	24/6
40 Watt Replacement-Carded													
S21854	5BT15/CL/LED/927/120V/2CD	5	120	BT15	E26	CL	2700K	450	90	4.06	1.81	15K	24/12
S21855	5BT15/WH/LED/927/120V/2CD	5	120	BT15	E26	WH	2700K	450	90	4.06	1.81	15K	24/12
60 Watt Replacement													
S21334	8BT15/CL/LED/927/120V	8	120	BT15	E26	CL	2700K	800	90	4.06	1.81	15K	24/6
S21335	8BT15/CL/LED/940/120V	8	120	BT15	E26	CL	4000K	800	90	4.06	1.81	15K	24/6
S21336	8BT15/CL/LED/950/120V	8	120	BT15	E26	CL	5000K	800	90	4.06	1.81	15K	24/6
S21337	8BT15/WH/LED/927/120V	8	120	BT15	E26	WH	2700K	800	90	4.06	1.81	15K	24/6
S21338	8BT15/WH/LED/940/120V	8	120	BT15	E26	WH	4000K	800	90	4.06	1.81	15K	24/6
S21339	8BT15/WH/LED/950/120V	8	120	BT15	E26	WH	5000K	800	90	4.06	1.81	15K	24/6
60 Watt Replacement-Carded													
S21856	8BT15/CL/LED/927/120V/2CD	8	120	BT15	E26	CL	2700K	800	90	4.06	1.81	15K	24/12
S21857	8BT15/WH/LED/927/120V/2CD	8	120	BT15	E26	WH	2700K	800	90	4.06	1.81	15K	24/12

^See warranty for details at www.satco.com. **Non-Dimmable. †cULus rated.

Product sheet SA2320

LED FILAMENT SPECIALTY LAMPS TUBULAR







T6.5 E12



T6.5 E17

Features:

- LED with a traditional incandescent look and feel
- Omni-directional light source
- Dimmable
- Wet location
- Approved for totally enclosed fixtures^
- c-ETL-us listed
- CEC T20
- 3 year warranty

DIMMABLE | WET LOCATION | ENCLOSED FIXTURE | 3 YEAR WARRANTY | c ETL LISTED us Intertek | FC | RoHS COMPLIANT

Item	Description	W	V	Bulb Shape	Base	Finish	CCT	Lm	CRI	MOL (in.)	MOD (in.)	Life (hrs.)	Pack
Tubular													
T6 - 25 Watt Replacement													
S21340	2.8T6/LED/CL/927/120V/E12	2.8	120	T6	E12	CL	2700K	200	90	3.2	0.98	15K	24/6
S12518	2.8T6/LED/CL/930/120V/E12	2.8	120	T6	E12	CL	3000K	200	90	3.2	0.98	15K	24/6
S21341	2.8T6/LED/CL/940/120V/E12	2.8	120	T6	E12	CL	4000K	200	90	3.2	0.98	15K	24/6
S12519	2.8T6/LED/CL/950/120V/E12	2.8	120	T6	E12	CL	5000K	200	90	3.2	0.98	15K	24/6
T6 - 40 Watt Replacement													
S21380	4T6L/927/E12/GCYS/120V/W	4	120	T6	E12	CL	2700K	400	90	3.43	0.87	15K	24/6
S21381	4T6L/930/E12/GCYS/120V/W	4	120	T6	E12	CL	3000K	400	90	3.43	0.87	15K	24/6
S21383	4T6L/950/E12/GCYS/120V/W	4	120	T6	E12	CL	5000K	400	90	3.43	0.87	15K	24/6
T6 - 25 Watt Replacement-Carded													
S21858	2.8T6/LED/CL/927/120V/E12/2CD	2.8	120	T6	E12	CL	2700K	200	90	3.27	0.98	15K	24/12
T6.5 - 25 Watt Replacement													
S21342	3T6.5/LED/CL/927/E17	3	120	T6.5	E17	CL	2700K	200	90	2.17	0.87	15K	24/6
S21343	3T6.5/LED/CL/930/E17	3	120	T6.5	E17	CL	3000K	200	90	2.17	0.87	15K	24/6
S12520	3T6.5/LED/CL/940/E17	3	120	T6.5	E17	CL	4000K	200	90	2.17	0.87	15K	24/6
S12521	3T6.5/LED/CL/950/E17	3	120	T6.5	E17	CL	5000K	200	90	2.17	0.87	15K	24/6
T6.5 - 40 Watt Replacement													
S21370	4T6.5/LED/CL/930/120V	4	120	T6.5	E17	CL	3000K	400	90	5.12	0.79	15K	24/12
S21371	4T6.5/LED/CL/940/120V	4	120	T6.5	E17	CL	4000K	400	90	5.12	0.79	15K	24/12
S12522	4T6.5/LED/CL/950/120V	4	120	T6.5	E17	CL	5000K	400	90	5.12	0.79	15K	24/6
S21372	4T6.5/LED/FR/930/120V	4	120	T6.5	E17	CL	3000K	360	90	5.12	0.79	15K	24/12
S21373	4T6.5/LED/FR/940/120V	4	120	T6.5	E17	FR	4000K	360	90	5.12	0.79	15K	24/12
S12523	4T6.5/LED/FR/950/120V	4	120	T6.5	E17	CL	5000K	400	90	5.12	0.79	15K	24/6
S21374	4T6.5/LED/CL/930/120V	4	120	T6.5	BA15d	CL	3000K	400	90	5.12	0.79	15K	24/12
S21375	4T6.5/LED/CL/940/120V	4	120	T6.5	BA15d	CL	4000K	400	90	5.12	0.79	15K	24/12
S21376	4T6.5/LED/FR/930/120V	4	120	T6.5	BA15d	FR	3000K	360	90	5.12	0.79	15K	24/12
S21377	4T6.5/LED/FR/940/120V	4	120	T6.5	BA15d	FR	4000K	360	90	5.12	0.79	15K	24/12
T6.5 - 40 Watt Replacement-Carded													
S21860	4T6.5/LED/CL/930/120V/E17/1CD	4	120	T6.5	E17	CL	3000K	400	90	5.12	0.79	15K	24/12
S21861	4T6.5/LED/CL/930/120V/DC/1CD	4	120	T6.5	BA15d	CL	3000K	400	90	5.12	0.79	15K	24/12
T9 - 40 Watt Replacement													
S21384	5T9L/927/E12/GCYS/120V/W	5	120	T9	E12	CL	2700K	550	90	3.27	1.18	15K	24/6
S21385	5T9L/930/E12/GCYS/120V/W	5	120	T9	E12	CL	3000K	550	90	3.27	1.18	15K	24/6
S21386	5T9L/940/E12/GCYS/120V/W	5	120	T9	E12	CL	4000K	550	90	3.27	1.18	15K	24/6
S21387	5T9L/950/E12/GCYS/120V/W	5	120	T9	E12	CL	5000K	550	90	3.27	1.18	15K	24/6

^See warranty for details at www.satco.com

Product sheet SA2320

© Satco Products, Inc. All rights reserved.

LED FILAMENT
SPECIALTY LAMPS TUBULAR





T10 E26



T10 E26

Features:

- LED with a traditional incandescent look and feel
- Omni-directional light source
- Dimmable
- Wet location
- Approved for totally enclosed fixtures˄
- c-ETL-us or cULus listed
- 3 year warranty



DIMMABLE · WET LOCATION · ENCLOSED FIXTURE · 3 YEAR WARRANTY · CERTIFIED · c ETL LISTED US Intertek · FC · RoHS COMPLIANT

Item	Description	W	V	Bulb Shape	Base	Finish	CCT	Lumen	CRI	MOL (in.)	MOD (in.)	Life (hrs.)	Pack
T10 - 40 Watt Replacement													
S21344	5.5T10/LED/CL/927/120V/E26	5.5	120	T10	E26	CL	2700K	450	90	5	1.25	15K	24/6
S21345	5.5T10/LED/CL/930/120V/E26	5.5	120	T10	E26	CL	3000K	450	90	5	1.25	15K	24/6
S12524	5.5T10/LED/CL/935/120V/E26	5.5	120	T10	E26	CL	3500K	450	90	5	1.25	15K	24/6
S21346	5.5T10/LED/CL/940/120V/E26	5.5	120	T10	E26	CL	4000K	450	90	5	1.25	15K	24/6
S21347	5.5T10/LED/CL/950/120V/E26	5.5	120	T10	E26	CL	5000K	450	90	5	1.25	15K	24/6
S21348	5.5T10/LED/FR/930/120V/E26	5.5	120	T10	E26	FR	3000K	450	90	5	1.25	15K	24/6
S21349R1	5.5T10/LED/SW/940/120V/E26	5.5	120	T10	E26	FR	4000K	450	90	5	1.25"	15K	24/6
T10 - 40 Watt Replacement-Carded													
S21862	5.5T10/LED/CL/927/120V/E26/2CD	5.5	120	T10	E26	CL	2700K	450	90	5	1.25	15K	24/12
S21863	5.5T10/LED/CL/950/120V/E26/2CD	5.5	120	T10	E26	CL	5000K	450	90	5	1.25	15K	24/12
S21864	5.5T10/LED/FR/930/120V/E26/2CD	5.5	120	T10	E26	FR	3000K	450	90	5	1.25	15K	24/12
T10 - 60 Watt Replacement													
S21350	8T10/LED/CL/927/120V/E26	8	120	T10	E26	CL	2700K	800	90	5	1.25	15K	24/6
S21351	8T10/LED/CL/930/120V/E26	8	120	T10	E26	CL	3000K	800	90	5	1.25	15K	24/6
S12525	8T10/LED/CL/935/120V/E26	8	120	T10	E26	CL	3500K	800	90	5	1.25	15K	24/6
S12526	8T10/LED/CL/940/120V/E26	8	120	T10	E26	CL	4000K	800	90	5	1.25	15K	24/6
S12527	8T10/LED/CL/950/120V/E26	8	120	T10	E26	CL	5000K	800	90	5	1.25	15K	24/6
S21352R1	8T10/LED/SW/927/120V/E26	8	120	T10	E26	FR	2700K	720	90	5	1.25"	15K	24/6
S21353R1	8T10/LED/SW/930/120V/E26	8	120	T10	E26	FR	3000K	720	90	5	1.25"	15K	24/6
T10 - 60 Watt Replacement-Carded													
S21865	8T10/LED/CL/927/120V/E26/2CD	8	120	T10	E26	CL	2700K	800	90	5	1.25	15K	24/12
S21866	8T10/LED/FR/927/120V/E26/2CD	8	120	T10	E26	FR	2700K	720	90	5	1.25	15K	24/12

˄See warranty for details at www.satco.com

Product sheet SA2320

LED FILAMENT
SPECIALTY LAMPS TUBULAR

Features:

- LED with a traditional incandescent look and feel
- Omni-directional light source
- Dimmable
- Wet location
- Approved for totally enclosed fixtures^
- c-ETL-us listed
- CEC T20
- 3 year warranty





T14 E26



ST19 E26



T9 E26

DIMMABLE | WET LOCATION | ENCLOSED FIXTURE | 3 YEAR WARRANTY | UL CERTIFIED | ETL LISTED c US Intertek | FC | RoHS COMPLIANT

Item	Description	W	V	Bulb Shape	Base	Finish	CCT	Lumen	CRI	MOL (in.)	MOD (in.)	Life (hrs.)	Pack
T9 - 40 Watt Replacement													
S12528	5T9/LED/CL/927/120V/E26	5	120	T9	E26	CL	2700K	500	90	7.2	1.18	15K	24/6
S12529	5T9/LED/CL/930/120V/E26	5	120	T9	E26	CL	3000K	500	90	7.2	1.18	15K	24/6
S12530	5T9/LED/CL/940/120V/E26	5	120	T9	E26	CL	4000K	500	90	7.2	1.18	15K	24/6
S12531	5T9/LED/CL/950/120V/E26	5	120	T9	E26	CL	5000K	500	90	7.2	1.18	15K	24/6
T9 - 60 Watt Replacement													
S21354	8T9/LED/CL/927/120V/E26	8	120	T9	E26	CL	2700K	800	90	7.2	1.18	15K	24/6
S21355	8T9/LED/CL/930/120V/E26	8	120	T9	E26	CL	3000K	800	90	7.2	1.18	15K	24/6
S12532	8T9/LED/CL/940/120V/E26	8	120	T9	E26	CL	4000K	800	90	7.2	1.18	15K	24/6
S12533	8T9/LED/CL/950/120V/E26	8	120	T9	E26	CL	5000K	800	90	7.2	1.18	15K	24/6
S21356R1	8T9/LED/SW/927/120V/E26	8	120	T9	E26	FR	2700K	700	90	7.1	1.18"	15K	24/6
S21357R1	8T9/LED/SW/930/120V/E26	8	120	T9	E26	FR	3000K	700	90	7.1	1.18"	15K	24/6
S21358	8T9/LED/CL/927/120V/E26	8	120	T9	E26	CL	2700K	800	90	12	1.18	15K	24/6
S21359	8T9/LED/CL/930/120V/E26	8	120	T9	E26	CL	3000K	800	90	12	1.18	15K	24/6
T9 - 60 Watt Replacement-Carded													
S21867	8T9/LED/CL/927/120V/E26/2CD	8	120	T9	E26	CL	2700K	800	90	7.2	1.18	15K	24/12
S21868	8T9/LED/FR/927/120V/E26/2CD	8	120	T9	E26	FR	2700K	700	90	7.2	1.18	15K	24/12
T14 - 40 Watt Replacement													
S21378	5.5T14/LED/CL/820/120V/E26	5.5	120	T14	E26	CL	2000K	500	90	4.53	1.77	15K	24/12
S21379	5.5T14/LED/CL/927/120V/E26	5.5	120	T14	E26	CL	2700K	500	90	4.53	1.77	15K	24/12
S12534	5.5T14/LED/CL/930/120V/E26	5.5	120	T14	E26	CL	3000K	500	90	4.53	1.77	15K	24/6
ST19 - 40 Watt													
S21360	5ST19/CL/LED/927/E26	5	120	ST19	E26	CL	2700K	425	90	5.43	2.28	15K	24/6
S21361	5ST19/CL/LED/930/E26	5	120	ST19	E26	CL	3000K	425	90	5.43	2.28	15K	24/6
S21362	5ST19/CL/LED/940/E26	5	120	ST19	E26	CL	4000K	425	90	5.43	2.28	15K	24/6
S12535	5ST19/CL/LED/950/E26	5	120	ST19	E26	CL	5000K	425	90	5.43	2.28	15K	24/6
ST19 - 40 Watt Replacement-Carded													
S21869	5ST19/CL/LED/927/E26/2CD	5	120	ST19	E26	CL	2700K	425	90	5.43	2.28	15K	24/12
ST19 - 60 Watt													
S21363	8ST19/CL/LED/927/E26	8	120	ST19	E26	CL	2700K	800	90	5.43	2.28	15K	24/6
S21364	8ST19/CL/LED/930/E26	8	120	ST19	E26	CL	3000K	800	90	5.43	2.28	15K	24/6
S21365	8ST19/CL/LED/940/E26	8	120	ST19	E26	CL	4000K	800	90	5.43	2.28	15K	24/6
S12536	8ST19/CL/LED/950/E26	8	120	ST19	E26	CL	5000K	800	90	5.43	2.28	15K	24/6
ST19 - 60 Watt Replacement-Carded													
S21870	8ST19/CL/LED/927/E26/2CD	8	120	ST19	E26	CL	2700K	800	90	5.43	2.28	15K	24/12

^See warranty for details at www.satco.com

Product sheet SA2320

© Satco Products, Inc. All rights reserved.

S14 LED STRING LIGHT LAMPS

Features:

- LED with a traditional incandescent look and feel
- Omni-directional light source
- Available in 6 color options
- Approved for totally enclosed fixtures^
- Wet location
- c-UL-us listed
- 3 year warranty



S14 LED STRING LIGHT LAMPS


S8021


S8022


S8023


S8024


S8025


S8026



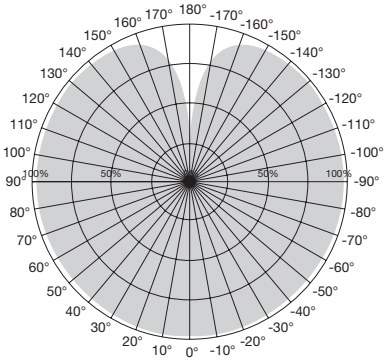

Beam Angle: 320°

ENCLOSED FIXTURE · c UL us LISTED · WET LOCATION · FC · RoHS COMPLIANT

Item	Description	W	V	Bulb Shape	Base	Finish	CCT	Lm	CRI	MOL (in.)	MOD (in.)	Life (hrs.)	UPC	Pack
LED String Light Replacement Lamps														
S8021R1	1W/LED/S14/CL/827/120V/ND/4PK	1	120	S14	E26	CL	2700K	100	80	3.43	1.18	15K	045923080210	24/4
S8022	1W/LED/S14/RED/120V/ND/4PK	1	120	S14	E26	RED	N/A	10	N/A	3.43	1.18	15K	045923080227	24/4
S8023	1W/LED/S14/BLUE/120V/ND/4PK	1	120	S14	E26	BLUE	N/A	5	N/A	3.43	1.18	15K	045923080234	24/4
S8024	1W/LED/S14/GREEN/120V/ND/4PK	1	120	S14	E26	GRN	N/A	20	N/A	3.43	1.18	15K	045923080241	24/4
S8025	1W/LED/S14/YELLOW/120V/ND/4PK	1	120	S14	E26	YLW	N/A	40	N/A	3.43	1.18	15K	045923080258	24/4
S8026	1W/LED/S14/ORANGE/120V/ND/4PK	1	120	S14	E26	ORNG	N/A	30	N/A	3.43	1.18	15K	045923080265	24/4
S8027R1	1W/LED/S14/CL/822/120V/ND/4PK	1	120	S14	E26	CL	2200K	100	80	3.43	1.18	15K	045923080272	24/4

ˆSee warranty for details at www.satco.com

Product sheet SA2320

© Satco Products, Inc. All rights reserved.

AMBER LED FILAMENT LAMPS



Features:

- LED with a traditional incandescent look and feel
- Omni-directional light source
- Dimmable
- Damp and wet location
- Approved for totally enclosed fixtures^
- c-ETL-us or cULus listed
- 3 year warranty



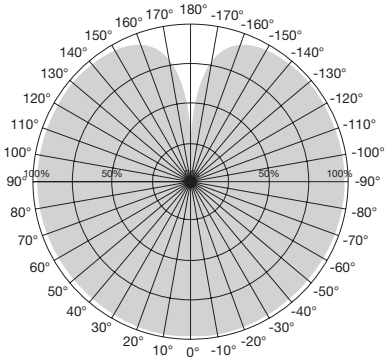

Beam Angle: 360°

AMBER LED FILAMENT LAMPS


A19


ST19


G25


G30


G40


T9


G16.5


CA11


C11


T6

Item	Description	W	V	Bulb Shape	Base	Finish	CCT	Lm	CRI	MOL (in.)	MOD (in.)	Life (hrs.)	UPC	Pack
ST19														
S14206	3.5ST19L/920/E26/GCAC/D	3.5	120	ST19	E26	CL Amber	2000K	300	90	5.32	2.29	15K	045923142062	24/6
S14207	5.5ST19L/920/E26/GCAC/D	5.5	120	ST19	E26	CL Amber	2000K	500	90	5.32	2.29	15K	045923142079	24/6
S14208	8ST19L/920/E26/GCAC/D	8	120	ST19	E26	CL Amber	2000K	800	90	5.32	2.29	15K	045923142086	24/6
G16.5														
S14209	3.5G25L/920/E26/GCAC/D	3.5	120	G16.5	E12	CL Amber	2000K	300	90	3.23	1.97	15K	045923142093	24/6
G25														
S14210	3.5G25L/920/E26/GCAC/D	3.5	120	G25	E26	CL Amber	2000K	300	90	4.73	3.15	15K	045923142109	24/6
S14211	5.5G25L/920/E26/GCAC/D	5.5	120	G25	E26	CL Amber	2000K	500	90	4.73	3.15	15K	045923142116	24/6
G30														
S14212	3.5G30L/920/E26/GCAC/D	3.5	120	G30	E26	CL Amber	2000K	300	90	5.36	3.74	15K	045923142123	24/6
S14213	5.5G30L/920/E26/GCAC/D	5.5	120	G30	E26	CL Amber	2000K	500	90	5.36	3.74	15K	045923142130	24/6
G40														
S14214	3.5G40L/920/E26/GCAC/D	3.5	120	G40	E26	CL Amber	2000K	300	90	6.58	4.89	15K	045923142147	24/6
S14215	5.5G40L/920/E26/GCAC/D	5.5	120	G40	E26	CL Amber	2000K	500	90	6.58	4.89	15K	045923142154	24/6
T6														
S14216	3.5T6L/920/E26/GCAS/D	3.5	120	T6	E12	CL Amber	2000K	300	90	4.9	0.87	15K	045923142161	24/6
S14217	5.5T6L/920/E26/GCAS/D	5.5	120	T6	E12	CL Amber	2000K	500	90	4.9	0.87	15K	045923142178	24/6
T9														
S14229	3.5T9L/920/E26/GCAC/D	3.5	120	T9	E26	CL Amber	2000K	300	90	7.49	1.18	15K	045923142291	24/6
S14230	5.5T9L/920/E26/GCAC/D	5.5	120	T9	E26	CL Amber	2000K	500	90	7.49	1.18	15K	045923142307	24/6
C11														
S14218	3.5C11L/920/E12/GCAC/D	3.5	120	C11	E12	CL Amber	2000K	300	90	3.92	1.38	15K	045923142185	24/6
S14219	5.5C11L/920/E12/GCAC/D	5.5	120	C11	E12	CL Amber	2000K	500	90	3.92	1.38	15K	045923142192	24/6
S14222	3.5C11L/920/E12/GCAC/D	3.5	120	C11	E12	CL Amber	2000K	300	90	3.45	1.38	15K	045923142222	24/6
S14223	5.5C11L/920/E26/GCAC/D	5.5	120	C11	E26	CL Amber	2000K	500	90	3.45	1.38	15K	045923142239	24/6
CA11														
S14220	3.5CA11L/920/E12/GCAC/D	3.5	120	CA11	E12	CL Amber	2000K	300	90	4.51	1.38	15K	045923142208	24/6
S14221	5.5CA11L/920/E12/GCAC/D	5.5	120	CA11	E12	CL Amber	2000K	500	90	4.51	1.38	15K	045923142215	24/6
S14224	3.5CA11L/920/E26/GCAC/D	3.5	120	CA11	E26	CL Amber	2000K	300	90	4.18	1.38	15K	045923142246	24/6
S14225	5.5CA11L/920/E12/GCAC/D	5.5	120	CA11	E26	CL Amber	2000K	500	90	4.18	1.38	15K	045923142253	24/6
A19														
S14226	3.5A19L/920/E26/GCAC/D	3.5	120	A19	E26	CL Amber	2000K	300	90	4.22	2.36	15K	045923142260	24/6
S14227	5.5A19L/920/E26/GCAC/D	5.5	120	A19	E26	CL Amber	2000K	500	90	4.22	2.36	15K	045923142277	24/6
S14228	8A19L/920/E26/GCAC/D	8	120	A19	E26	CL Amber	2000K	800	90	4.22	2.36	15K	045923142284	24/6

ˆSee warranty for details at www.satco.com

Product sheet NA

© Satco Products, Inc. All rights reserved.

DECORATIVE SPIRAL LED FILAMENT LAMPS

Features:

- LED with a traditional incandescent look and feel
- Omni-directional light source
- Dimmable
- Damp location
- Approved for totally enclosed fixtures^
- c-UL-us listed
- 3 year warranty



DECORATIVE SPIRAL LED FILAMENT LAMPS



B10 ST19 G40 G30 A19 T9

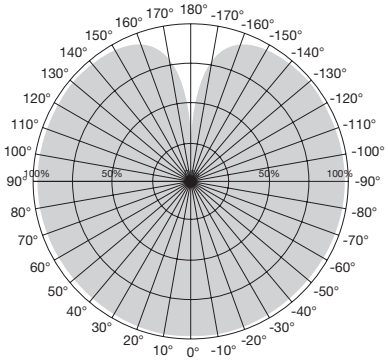

Beam Angle: 360°

DIMMABLE^ ENCLOSED FIXTURE DAMP LOCATION c UL US

Item	Description	W	V	Bulb Shape	Base	Finish	CCT	Lm	CRI	MOL (in.)	MOD (in.)	Life (hrs.)	UPC	Pack
ST19														
S9967	4.5ST19/SPIRAL/LED/AMB/120V	4.5	120	ST19	E26	TR AMB	2000K	240	80	5.25	2.38	15K	045923099670	24/6
A19														
S9966	4.5A19/SPIRAL/LED/AMB/120V	4.5	120	A19	E26	TR AMB	2000K	220	80	4.00	2.38	15K	045923099663	24/6
G30														
S9968	4.5G30/SPIRAL/LED/AMB/120V	4.5	120	G30	E26	TR AMB	2000K	240	80	5.44	3.75	15K	045923099687	24/6
G40														
S9969	4.5G40/SPIRAL/LED/AMB/120V	4.5	120	G40	E26	TR AMB	2000K	240	80	6.63	4.94	15K	045923099694	12/6
T9														
S9971	4.5T9/SPIRAL/LED/AMB/120V	4.5	120	T9	E26	TR AMB	2000K	240	80	7.19	1.13	15K	045923099717	24/6
B10														
S9970	2.3ETC/SPIRAL/LED/AMB/120V	2.3	120	B10	E26	TR AMB	2000K	90	80	3.50	1.38	15K	045923099700	24/6

^See warranty for details at www.satco.com

Product sheet SA1980

© Satco Products, Inc. All rights reserved.

LED SPIRAL FILAMENT VINTAGE-STYLE LAMPS IN HID ENVELOPES

Features:

- Uses only 4 watts
- Impressive size & presence
- Omni-directional light source
- Perfect for pendant fixtures & hanging sockets
- Approved for totally enclosed fixtures^
- Dimmable
- Shapes: T24, BT38, BT56 & PS52
- E26 base
- 3 year warranty



LED SPIRAL FILAMENT VINTAGE-STYLE LAMPS IN HID ENVELOPES



S22431
BT38



S22430
T24



S22433
PS52



S22432
BT56

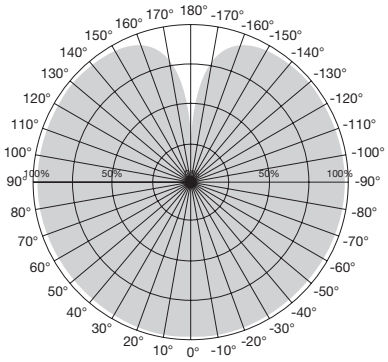

Beam Angle: 320°

DIMMABLE^ ENCLOSED FIXTURE WET LOCATION

Item	Description	W	V	Bulb Shape	Base	Finish	CCT	Lm	CRI	MOL (in.)	MOD (in.)	Life (hrs.)	UPC	Pack
S22430	4T24/LED/CL/E26/VINTAGE/120V	4	120	T24	E26	CL	2150K	200	90	13.00	3.00	25K	045923224300	12
S22431	4BT38/LED/CL/E26/VINTAGE/120V	4	120	BT38	E26	CL	2150K	200	90	16.50	4.69	25K	045923224317	12
S22432	4BT56/LED/CL/E26/VINTAGE/120V	4	120	BT56	E26	CL	2150K	200	90	13.81	7.13	25K	045923224324	6
S22433	4PS52/LED/CL/E26/VINTAGE/120V	4	120	PS52	E26	CL	2150K	200	90	11.81	6.31	25K	045923224331	6

^See warranty for details at www.satco.com

Product sheet SA2298

© Satco Products, Inc. All rights reserved.

NOTES

© Satco Products, Inc. All rights reserved.

To learn more about SATCO|NUVO, visit **www.satco.com** or contact **1-800-437-2826**

Like us on Facebook Connect with us on LinkedIn Follow us on Instagram

National Toll-Free: **1.800.43.SATCO** (1.800.437.2826)

Corporate Offices & Distribution Center: **NEW YORK** 110 Heartland Blvd., Brentwood, NY 11717 | 800.437.2826 | 631.243.2022 | Fax 631.243.2027

Distribution Centers:
FLORIDA 1694 NW 215th St. Miami Gardens, FL 33056 | Tel. 305.624.2044 FAX 305.623.0286
CALIFORNIA 31288 San Benito St. Hayward, CA 94544 | Tel. 510.487.4822 FAX 510.487.8955
WASHINGTON 4710 116th St. S.W., Mukilteo, WA 98275 | Tel. 425.789.3300 FAX 425.789.3310
TEXAS 2000 Valwood Parkway, Farmers Branch, TX 75234 | Tel. 972.247.2437 FAX 972.247.5408
PUERTO RICO Campeche St. 23, Julio N. Matos Industrial Park, Carolina, PR 00984 | Tel. 787.757.3510 FAX 787.757.3540

Product specifications and availability are subject to change without notice.
Please visit us online at www.satco.com for our full product line and ordering details, or consult factory for additional information

© SATCO Products, Inc. All rights reserved.

9/26 SN1812

SATCO | NUVO