SIEMENS

Ingenuity for life




# G-frame Circuit Breakers

## Product Guide

usa.siemens.com/circuitbreakers

# Advantages to reduce your installed cost

- Compact size saves space and helps reduce overall panel size.



- Interchangeable lugs and nut keepers for customer-supplied connections allow for last minute changes on site.



- UL listed field installable accessories allow for last minute changes on site. Also, inventory can be minimized as these accessories cover two families of Siemens breakers.



- Integral DIN rail or base mounting capability simplifies mounting the breaker without having to add plates or adapters.



- CE/CSA/NOM marked UL breakers let you serve all major markets with one design.

# General information

The Siemens GG circuit breaker is a compact, industrial design thermal magnetic breaker with valuable features for the global markets. These features include a design that meets multi-national standards, is suitable for DIN rail or base mounting without the need for adapters, and includes UL listed field installable accessories. The GG also has an overcenter toggle mechanism that is trip free and uses repulsion contact arm construction. Therefore, should a short circuit or tripping condition occur, the contacts are forced apart and the breaker cannot be held closed by means of the handle.

The GB and GB2 circuit breakers include the same design features as the GG except the line end of the breaker is configured for panelboard mounting applications and it is without some of the global markings.

**Applications:**

- With their compact size, the G-frame circuit breakers are well suited for OEM designed equipment in both light commercial and industrial applications.
- The GG can be independently mounted on DIN rail or held in place by mounting screws.
- The GB and GB2 breakers are for panelboard mounted applications.
- These circuit breakers may be used as incoming main and branch breakers in distribution systems.

**Operating conditions:**

- The GG circuit breakers are designed for use in enclosed rooms, in which there are no adverse operating conditions (e.g. dust, corrosive vapors, destructive gases).
- For installation in dusty and damp rooms or outdoors, suitable enclosures must be used.
- The G-Frame is factory calibrated for 40° C ambient.

## 125A frame
## Type GG / GB / GB2

- Global rated (UL/CSA/ IEC /NOM)
  UL489
  CSA-C22.2 No. 5-02
  IEC 60947-2 (GG) (PENDING)
  NOM-003
- HACR, SWD, and HID marked (at applicable ratings)
- Integral DIN rail or base mount without adapters (GG)
- UL Listed field installable accessories
- Removable lugs
- 25 kA, 35 kA, 65 kA @ 480V AC (GG/GB2) 25 kA, 35 kA, 65 kA @ 480Y/277V AC (GB)
- Compact Size
  3.0”W x 5.4”H x 2.8”D (1.0” wide per pole)
- 1, 2, 3 pole units
- Overcenter toggle and trip free mechanism
- Suitable for reverse feed applications
- Common trip
- Voltage ratings of 120V, 240V, 277V, 480V (GG / GB2)
  480Y/277V AC, 600Y/347V AC
  DC rated at 125V, 250V DC
- Meets or exceeds federal specifications W-C-375c
  Classes 10b, 11a, 11b, 12b, 12c, 13a, 13b, 15b



# General information

### Ratings and markings

| Type | Current range (A) | HACR rated | SWD marked | HID marked |
|---|---|---|---|---|
| 1 pole | 15 - 125 | 15 - 125 | 15 - 20 | 15 - 50 |
| 2 pole | 15 - 125 | 15 - 125 | — | 15 - 50 |
| 3-pole | 15 - 125 | 15 - 125 | — | 15 - 50 |

### Shipping weight

| Frame | 1 pole | 2 poles | 3 poles |
|---|---|---|---|
| xGB | 0.9 lbs. / 0.4 kgs. | 1.9 lbs. / 0.9 kgs. | 2.9 lbs. / 1.2 kgs. |
| GG/xGB2 | 0.75 lbs. / 0.34 kgs. | 1.3 lbs. / 0.59 kgs | 2.0 lbs / 0.98 kgs. |

### Interrupting ratings (max. RMS symmetrical amperes kA)

| Type | Poles | UL489 | | | | | | | | IEC 60947-2 (Ics = 50% Icu) | | |
|---|---|---|---|---|---|---|---|---|---|---|---|---|
| | | Volts AC | | | | | | Volts DC | | Volts AC | | Volts DC |
| | | 120 | 240 | 277 | 347 | 480 | 600Y/347 | 125 | 125/250 | 240 | 415 | 125/250 |
| NGG | 1 | 65 | — | 25 | 14 | — | — | 14 | — | 25 | — | — |
| | 2, 3 | — | 65 | — | — | 25 | 14 | — | 14 [1)] | 65 | 25 | 14[1)] |
| HGG | 1 | 65 | — | 35 | 14 | — | — | 14 | — | — | — | — |
| | 2, 3 | — | 65 | — | — | 35 | 14 | — | 14 [1)] | — | — | — |
| LGG | 1 | 65 | — | 65 | 14 | — | — | 14 | — | — | — | — |
| | 2, 3 | — | 65 | — | — | 65 | 14 | — | 14 [1)] | — | — | — |

| Type | Poles | UL489 | | | | | | | |
|---|---|---|---|---|---|---|---|---|---|
| | | Volts AC | | | | | | Volts DC | |
| | | 120 | 240 | 277 | 347 | 480Y/277 | 600Y/347 | 125 | 125/250 |
| NGB | 1 | 100 | — | 25 | 14 | — | — | 14 | — |
| | 2, 3 | — | 100 | — | — | 25 | 14 | — | 14 [1)] |
| HGB | 1 | 100 | — | 35 | 14 | — | — | 14 | — |
| | 2, 3 | — | 100 | — | — | 35 | 14 | — | 14 [1)] |
| LGB | 1 | 100 | — | 65 | 14 | — | — | 14 | — |
| | 2, 3 | — | 100 | — | — | 65 | 14 | — | 14 [1)] |

| Type | Poles | UL489 | | | | | | | |
|---|---|---|---|---|---|---|---|---|---|
| | | Volts AC | | | | | | Volts DC | |
| | | 120 | 240 | 277 | 347 | 480 | 600Y/347 | 125 | 125/250 |
| NGB2 | 1 | 100 | — | 25 | 14 | — | — | 14 | — |
| | 2, 3 | — | 100 | — | — | 25 | 14 | — | 14 [1)] |
| HGB2 | 1 | 100 | — | 35 | 22 | — | — | 14 | — |
| | 2, 3 | — | 100 | — | — | 35 | 22 | — | 14 [1)] |
| LGB2 | 1 | 100 | — | 65 | 25 | — | — | 14 | — |
| | 2, 3 | — | 100 | — | — | 65 | 25 | — | 14 [1)] |

[1)] 2-pole only or two outer poles of 3-pole breaker.

**G-Frame 1, 2 and 3 poles**

| Ampere rating | NGG catalog number | HGG catalog number | LGG catalog number | NGB catalog number | HGB catalog number | LGB catalog number |
|---|---|---|---|---|---|---|
| In | (Cable in - Cable out) | (Cable in - Cable out) | (Cable in - Cable out) | (Low Tab Panelboard Mount) | (Low Tab Panelboard Mount) | (Low Tab Panelboard Mount) |
| 15 | NGG_B015L | HGG_B015L | LGG_B015L | NGB_B015B | HGB_B015B | LGB_B015B |
| 20 | NGG_B020L | HGG_B020L | LGG_B020L | NGB_B020B | HGB_B020B | LGB_B020B |
| 25 | NGG_B025L | HGG_B025L | LGG_B025L | NGB_B025B | HGB_B025B | LGB_B025B |
| 30 | NGG_B030L | HGG_B030L | LGG_B030L | NGB_B030B | HGB_B030B | LGB_B030B |
| 35 | NGG_B035L | HGG_B035L | LGG_B035L | NGB_B035B | HGB_B035B | LGB_B035B |
| 40 | NGG_B040L | HGG_B040L | LGG_B040L | NGB_B040B | HGB_B040B | LGB_B040B |
| 45 | NGG_B045L | HGG_B045L | LGG_B045L | NGB_B045B | HGB_B045B | LGB_B045B |
| 50 | NGG_B050L | HGG_B050L | LGG_B050L | NGB_B050B | HGB_B050B | LGB_B050B |
| 60 | NGG_B060L | HGG_B060L | LGG_B060L | NGB_B060B | HGB_B060B | LGB_B060B |
| 70 | NGG_B070L | HGG_B070L | LGG_B070L | NGB_B070B | HGB_B070B | LGB_B070B |
| 80 | NGG_B080L | HGG_B080L | LGG_B080L | NGB_B080B | HGB_B080B | LGB_B080B |
| 90 | NGG_B090L | HGG_B090L | LGG_B090L | NGB_B090B | HGB_B090B | LGB_B090B |
| 100 | NGG_B100L | HGG_B100L | LGG_B100L | NGB_B100B | HGB_B100B | LGB_B100B |
| 110 | NGG_B110L | HGG_B110L | LGG_B110L | NGB_B110B | HGB_B110B | LGB_B110B |
| 125 | NGG_B125L<br>1=1 pole<br>2=2 pole<br>3=3 pole<br>L = Line & Load side lugs [1] | HGG_B125L<br>1=1 pole<br>2=2 pole<br>3=3 pole<br>L = Line & Load side lugs [1] | LGG_B125L<br>1=1 pole<br>2=2 pole<br>3=3 pole<br>L = Line & Load side lugs [1] | NGB_B125B<br>1=1 pole<br>2=2 pole<br>3=3 pole<br>B = Load side lugs [2] | HGB_B125B<br>1=1 pole<br>2=2 pole<br>3=3 pole<br>B = Load side lugs [2] | LGB_B125B<br>1=1 pole<br>2=2 pole<br>3=3 pole<br>B = Load side lugs [2] |

[1] This "L" indicates Line Side and Load Side lugs are supplied as standard. To order a GG without lugs, remove the L suffix.

[2] This "B" indicates Load Side lugs are supplied as standard. To order a GB without lugs, remove the B suffix.

**G-Frame 1, 2 and 3 poles IPanelboard mount)**

| Ampere rating | NGB2 catalog number | HGB2 catalog number | LGB2 catalog number |
|---|---|---|---|
| In | (Low Tab Panelboard Mount) | (Low Tab Panelboard Mount) | (Low Tab Panelboard Mount) |
| 15 | NGB_K015B | HGB_K015B | LGB_K015B |
| 20 | NGB_K020B | HGB_K020B | LGB_K020B |
| 25 | NGB_K025B | HGB_K025B | LGB_K025B |
| 30 | NGB_K030B | HGB_K030B | LGB_K030B |
| 35 | NGB_K035B | HGB_K035B | LGB_K035B |
| 40 | NGB_K040B | HGB_K040B | LGB_K040B |
| 45 | NGB_K045B | HGB_K045B | LGB_K045B |
| 50 | NGB_K050B | HGB_K050B | LGB_K050B |
| 60 | NGB_K060B | HGB_K060B | LGB_K060B |
| 70 | NGB_K070B | HGB_K070B | LGB_K070B |
| 80 | NGB_K080B | HGB_K080B | LGB_K080B |
| 90 | NGB_K090B | HGB_K090B | LGB_K090B |
| 100 | NGB_K100B | HGB_K100B | LGB_K100B |
| 110 | NGB_K110B | HGB_K110B | LGB_K110B |
| 125 | NGB_K125B<br>1=1 pole<br>2=2 pole<br>3=3 pole | HGB_K125B<br>1=1 pole<br>2=2 pole<br>3=3 pole | LGB_K125B<br>1=1 pole<br>2=2 pole<br>3=3 pole |

Note: Load Lugs are included as standard. HACR rated.

# Internal accessories

Shunt trip, auxiliary switches, and alarm switches are operational devices that are contained within an add-on module for the G-frame circuit breakers. One module can be attached to the left side only of the circuit breaker. Each module can be installed in the field.

**Shunt trip** – A shunt trip is used to trip the breaker remotely. It is operated by providing voltage to the shunt trip coil. The coil in this device is designed to be energized only momentarily, so included is a built-in limit switch which opens the coil circuit after the breaker trips. With the circuit breaker in the tripped position, voltage cannot be applied through the coil circuit due to the open contacts in the limit switch. The operational range of this device is (70 to 110%) of the marked voltage rating.

**Auxiliary switches** – Auxiliary switches are used for remote indication of breaker contact position (ON or OFF). Each switch consists of "A" (normally open) and "B" (normally closed) contact with a common connection. These devices are typically used for signaling purposes.

**Alarm switch** – The alarm switch provides indication of breaker tripping. Alarm contacts operate off of the tripping mechanism of the circuit breaker and only change state when the breaker is tripped. Each alarm switch consists of 1 "A" (normally open) and 1 "B" (normally closed) contact, with a common connection. Sometimes these are also called Bell Alarms.

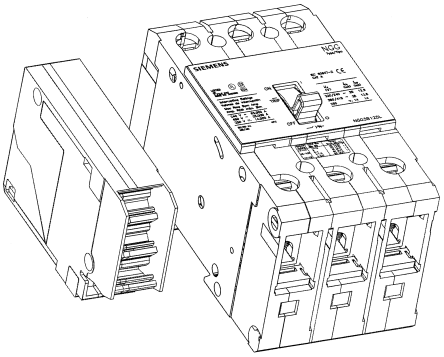

Mounted left side only, not available on single pole breakers.

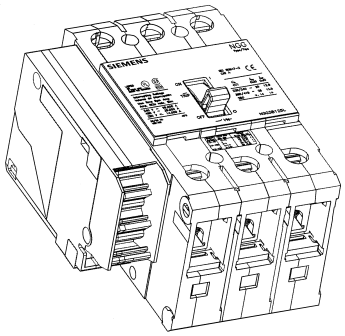




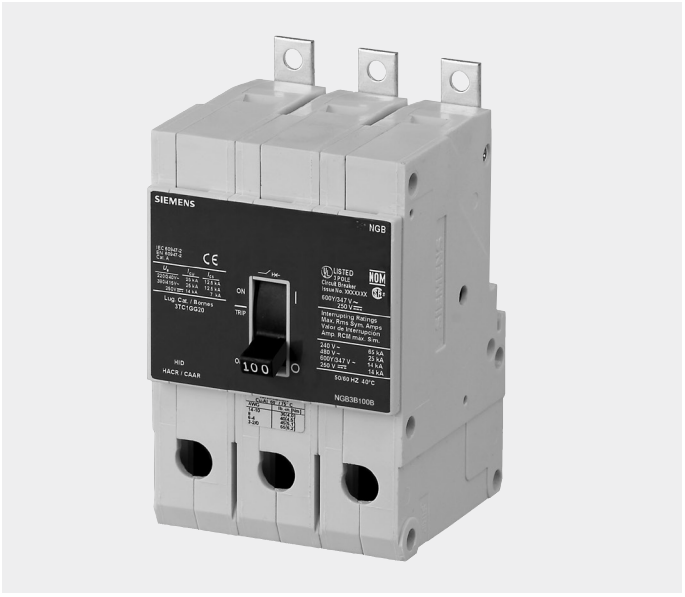


**Available accessory combinations**

| Shunt trip | Auxiliary switch | Alarm contact |
|---|---|---|
| 1 | 0 | 0 |
| 0 | 1 | 0 |
| 0 | 2 | 0 |
| 1 | 1 | 0 |
| 0 | 0 | 1 |
| 0 | 1 | 1 |

# Accessories

**Shunt trip –** Contains (1) shunt trip device. A combination includes a shunt trip device and an auxiliary switch with 1A-1B contacts.

| Control Voltage | | | Shunt trip | Shunt trip and auxiliary switch combination |
|---|---|---|---|---|
| AC | DC | Current draw | Catalog number | Catalog number |
| 120 | — | 0.09A | CQDST120 | CQDST120AAS |
| 240 | — | 0.50A | CQDST240 | CQDST240AAS |
| 277 | — | 0.55A | CQDST277 | CQDST277AAS |
| 480 | — | 0.45A | CQDST480 | CQDST480AAS |
| 600 | — | 0.50A | CQDST600 | CQDST600AAS |
| — | 12 | 1.20A | CQDST12 | CQDST12DAS |
| — | 24 | 0.80A | CQDST24 | CQDST24DAS |
| — | 48 | 0.80A | CQDST48 | CQDST48DAS |
| — | 125 | 0.35A | CQDST125 | CQDST125DAS |

**Auxiliary switch –** Contains (1) or (2) sets of "A" contacts and "B" contacts.

| Maximum control supply voltage $U_s$ | | Single auxiliary switch 1A-1B contact | | Double auxiliary 2A-2B switch contacts | |
|---|---|---|---|---|---|
| AC | DC | Catalog number | Maximum operational current | Catalog number | Maximum operational current |
| 240 | 125 | CQDA1 | @240V AC – 15A<br>@125V DC – 0.5A | CQDA2 | @240V AC – 15A<br>@125V DC – 0.5A |

**Alarm switch –** Contains (1) set of "A" and "B" contacts.

| Maximum control supply voltage $U_s$ | | Single alarm switch Catalog number | Auxiliary and alarm switch Catalog number | Maximum operational current |
|---|---|---|---|---|
| AC | DC | | | |
| 240 | 125 | CQDBA | CQDA1BA | @240V AC – 15A<br>@125V DC – 0.5A |

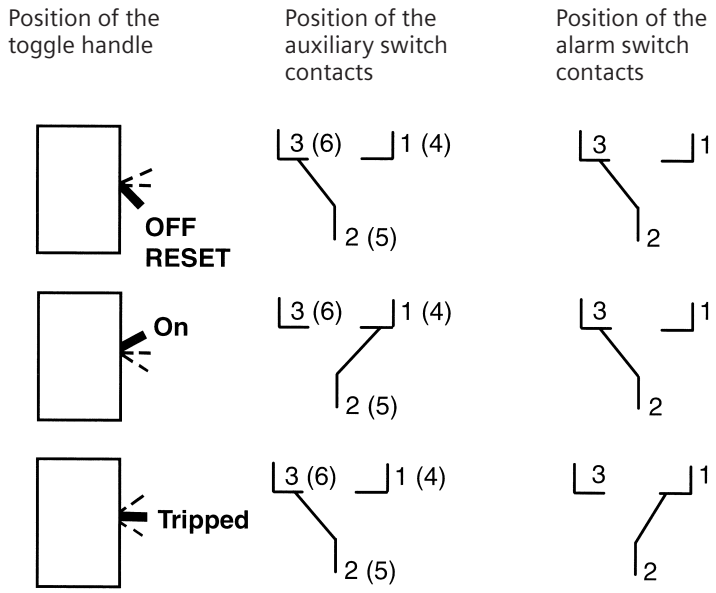

# External accessories

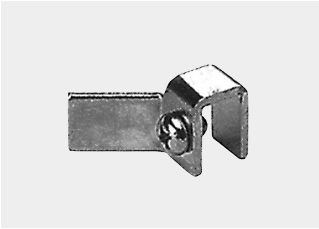

Handle blocking device
BQDHBD



Handle padlock device
HPLG
(use BQDPLD in panelboards)



Mounting screw kit
MSKG4



Handle tie
BQDHT2 and BQDHT3
(with padlock)

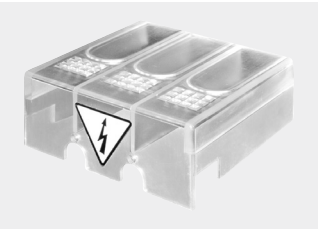

Terminal Shield (3 pole)
TSSG3A
(Line or Load Side)

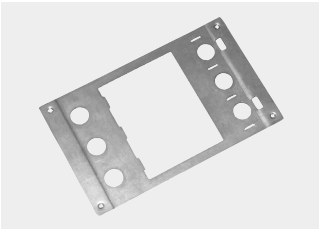

Face mounting plate
FMPG1 1-pole
FMPG2 2-pole
FMPG3 3-pole



Nut keeper plate
TNKG3 (kit of 3)

## Terminal connectors

**Lug information**

| Breaker amp rating (A) | Wire size (AWG) | Torque Inch-lb (NM) | Lug Catalog number | |
|---|---|---|---|---|
| 15 – 30 | #14-#10 Al or Cu<br>#8 Al or Cu | 35 (4.0)<br>40 (4.5) | 3TC1Q1<br>(pkg. of 3) | TC1Q1<br>(pkg. of 1) |
| 35 – 125 | #8 Al or Cu<br>#6 - #4 Al or Cu<br>#3 - 1/0 Al or Cu | 40 (4.5)<br>45 (5.1)<br>55 (6.2) | 3TC1GG20<br>(pkg. of 3) | |

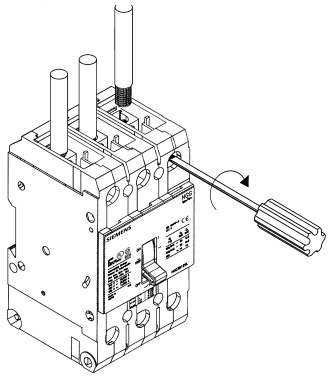

**Distribution Lugs**

| For circuit breaker types | Ampere rating | Poles | Lugs per kit | Wires per lug | Lug wire size | Catalog number |
|---|---|---|---|---|---|---|
| GG | 15-125 | 1,2,3 | 1 | 6 | #6-#4 AL<br>#14-#4 Cu | TA6GG04 |

It is possible to remove factory installed lugs to allow customer-supplied connections.

Nut Keeper Plates are available instead of lugs for use with customer-supplied connections.

# Accessories

### Enclosures

| Enclosure type | Mounting | Ampere rating | Catalog number |
|---|---|---|---|
| NEMA 1 – Indoor (general duty) | Surface | 15 - 125 | GG0121SN |
| NEMA 1 – Indoor (general duty) | Flush | 15 - 125 | GG0121FN |
| NEMA 3R – Outdoor (rain, snow) | Surface | 15 - 125 | GG0123RN |
| NEMA 4X – Outdoor (Corrosion Resistant; non-metallic) | Surface | 15 - 125 | GG0124XN |

### Strap Kits

| Catalog number | Description | Panelboard type |
|---|---|---|
| MBKNB1 | Main/Subfeed strap kit for _GB breakers – 1-phase | P1 |
| MBKNB3 | Main/Subfeed strap kit for _GB breakers – 3-phase | P1 |
| BBKNB32 [3)] | _GB 6-pole 3" branch breaker kit – P2/P3 | P2, P3 |
| SNB | Twin Mounting Panel Branch Kit – 1 and 3 Phase | P4 |
| SNBD | Twin Mounting Panel Branch Kit – 1 and 3 Phase | P5 |

[3)] Kit contains top barrier, (3) A/C connectors, (1) B connector, hardware.

# Accessories

**Handle Operators**

| Catalog number | Type | Description | NEMA enclosure |
|---|---|---|---|
| RHVM12H | Manual Rotary Door Mount Handle Operator - D/M-FR | Standard Handle | 1, 12, 12K |
| RHVM3RH | Manual Rotary Door Mount Handle Operator - D-M | Metal Handle | 1, 2, 3, 3R, 12, 12K, 13 |
| RHVMEMH | Manual Rotary Door Mount Handle Operator - DG-MG | Red & Yellow Handle | 1, 2, 3, 3R, 12, 12K, 13 |
| RHVM4XH | Manual Rotary Door Mount Handle Operator - D-M | Metal Chrome Handle | 1, 2, 3, 3R, 4, 4X, 12, 12K, 13 |
| RHVG79H | NFPA-79 Intermediate Handle | NFPA 79 Handle | ANY |
| RHVGBM | Door Mounted Breaker Operating Mechanism (RHO) | Breaker Operator | ANY |
| RHVGSxx [1] | Breaker Shaft with Bracket | Shaft | ANY |
| RHVG1212 | Rotary Handle Kit [3] | RHVM12H + RHVGBM + RHVGS12 | 1, 2, 3, 3R, 12, 12K, 13 |
| RHVG123R | Rotary Handle Kit [3] | RHVM3RH + RHVGBM + RHVGS12 | 1, 2, 3, 3R, 12, 12K, 13 |
| RHVG124X | Rotary Handle Kit [3] | RHVM4XH + RHVGBM + RHVGS12 | 1, 2, 3, 3R, 4, 4X, 12, 12K, 13 |
| RHVG1612 | Rotary Handle Kit [3] | RHVM12H + RHVGBM + RHVGS16 | 1, 2, 3, 3R, 12, 12K, 13 |
| RHVG163R | Rotary Handle Kit [3] | RHVM3RH + RHVGBM + RHVGS16 | 1, 2, 3, 3R, 12, 12K, 13 |
| RHVG164X | Rotary Handle Kit [3] | RHVM4XH + RHVGBM + RHVGS16 | 1, 2, 3, 3R, 4, 4X, 12, 12K, 13 |
| RHVGEM123R | Rotary Handle Kit [3] | RHVMEMH + RHVGBM + RHVGS12 | 1, 2, 3, 3R, 12, 12K, 13 |
| RHVGEM163R | Rotary Handle Kit [3] | RHVMEMH + RHVGBM + RHVGS16 | 1, 2, 3, 3R, 12, 12K, 13 |
| MFHG3R | MaxFlex Handle - 3R | Handle/Frame | 1, 3, 3R, 4, 12, 12K |
| MFHG4X | MaxFlex Handle - 4X | Handle/Frame | 1, 2, 3, 3R, 4, 4X, 12, 12K, 13 |
| MFMG | MaxFlex Breaker Operating Mechanism | Breaker Operator | ANY |
| MFCFxxx [2] | MaxFlex Cable - xx" D/F-FR | Breaker Operator | ANY |
| MFKG3R3 | MaxFlex Kit [4] | MFHG3R + MFMG + MFCF036 | 1, 2, 3, 3R, 12, 12K, 13 |
| MFKG3R4 | MaxFlex Kit [4] | MFHG3R + MFMG + MFCF048 | 1, 2, 3, 3R, 12, 12K, 13 |
| MFKG3R5 | MaxFlex Kit [4] | MFHG3R + MFMG + MFCF060 | 1, 2, 3, 3R, 12, 12K, 13 |
| MFKG3R6 | MaxFlex Kit [4] | MFHG3R + MFMG + MFCF072 | 1, 2, 3, 3R, 12, 12K, 13 |
| MFKG3R7 | MaxFlex Kit [4] | MFHG3R + MFMG + MFCF084 | 1, 2, 3, 3R, 12, 12K, 13 |
| MFKG3R8 | MaxFlex Kit [4] | MFHG3R + MFMG + MFCF096 | 1, 2, 3, 3R, 12, 12K, 13 |
| MFKG3R9 | MaxFlex Kit [4] | MFHG3R + MFMG + MFCF108 | 1, 2, 3, 3R, 12, 12K, 13 |
| MFKG3R10 | MaxFlex Kit [4] | MFHG3R + MFMG + MFCF120 | 1, 2, 3, 3R, 12, 12K, 13 |
| MFKG3R12 | MaxFlex Kit [4] | MFHG3R + MFMG + MFCF144 | 1, 2, 3, 3R, 12, 12K, 13 |
| MFKG4X3 | MaxFlex Kit [4] | MFHG4X + MFMG + MFCF036 | 1, 2, 3, 3R, 4, 4X, 12, 12K, 13 |
| MFKG4X4 | MaxFlex Kit [4] | MFHG4X + MFMG + MFCF048 | 1, 2, 3, 3R, 4, 4X, 12, 12K, 13 |
| MFKG4X5 | MaxFlex Kit [4] | MFHG4X + MFMG + MFCF060 | 1, 2, 3, 3R, 4, 4X, 12, 12K, 13 |
| MFKG4X6 | MaxFlex Kit [4] | MFHG4X + MFMG + MFCF072 | 1, 2, 3, 3R, 4, 4X, 12, 12K, 13 |
| MFKG4X7 | MaxFlex Kit [4] | MFHG4X + MFMG + MFCF084 | 1, 2, 3, 3R, 4, 4X, 12, 12K, 13 |
| MFKG4X8 | MaxFlex Kit [4] | MFHG4X + MFMG + MFCF096 | 1, 2, 3, 3R, 4, 4X, 12, 12K, 13 |
| MFKG4X9 | MaxFlex Kit [4] | MFHG4X + MFMG + MFCF108 | 1, 2, 3, 3R, 4, 4X, 12, 12K, 13 |
| MFKG4X10 | MaxFlex Kit [4] | MFHG4X + MFMG + MFCF120 | 1, 2, 3, 3R, 4, 4X, 12, 12K, 13 |
| MFKG4X12 | MaxFlex Kit [4] | MFHG4X + MFMG + MFCF144 | 1, 2, 3, 3R, 4, 4X, 12, 12K, 13 |

[1] xx = Represents length of shaft, up to 24 inches.
[2] xxx = Represents length of cable; 036, 048, 060, 072, 084, 096, 120, or 144.
[3] Rotary Handle Kit includes: Handle, breaker operating mechanism, breaker shaft
[4] MaxFlex Kit includes: 3R/4X handle, breaker operating mechanism, cable

# Mounting

Replacement neutral kit for all GG breaker enclosures is catalog number N125GG.
The GG series of Siemens circuit breakers can be mounted in several manners.
1) Mounted on 35x7.5mm or 35x15mm DIN rail

2) Mounted to customer supplied surface using Mounting Screw Kit – MSKG4

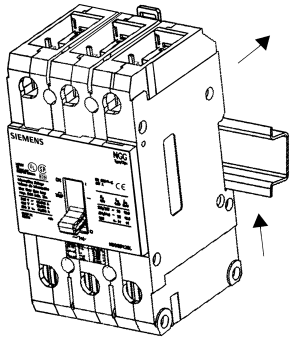


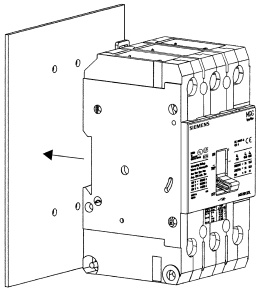

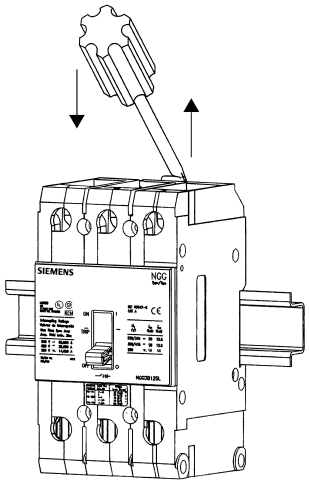


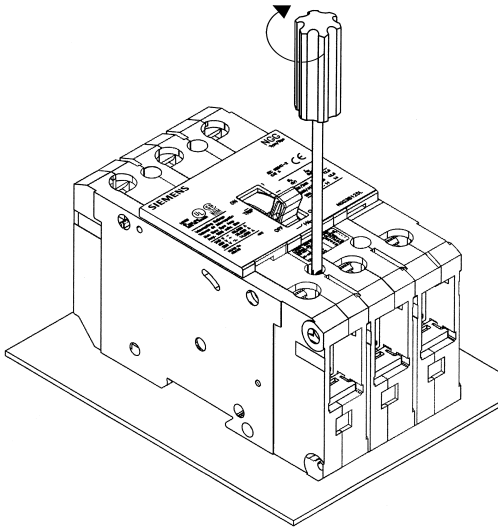

# Dimensions

### GG/GB2 Frame Outline Drawing – 1, 2, 3 Pole

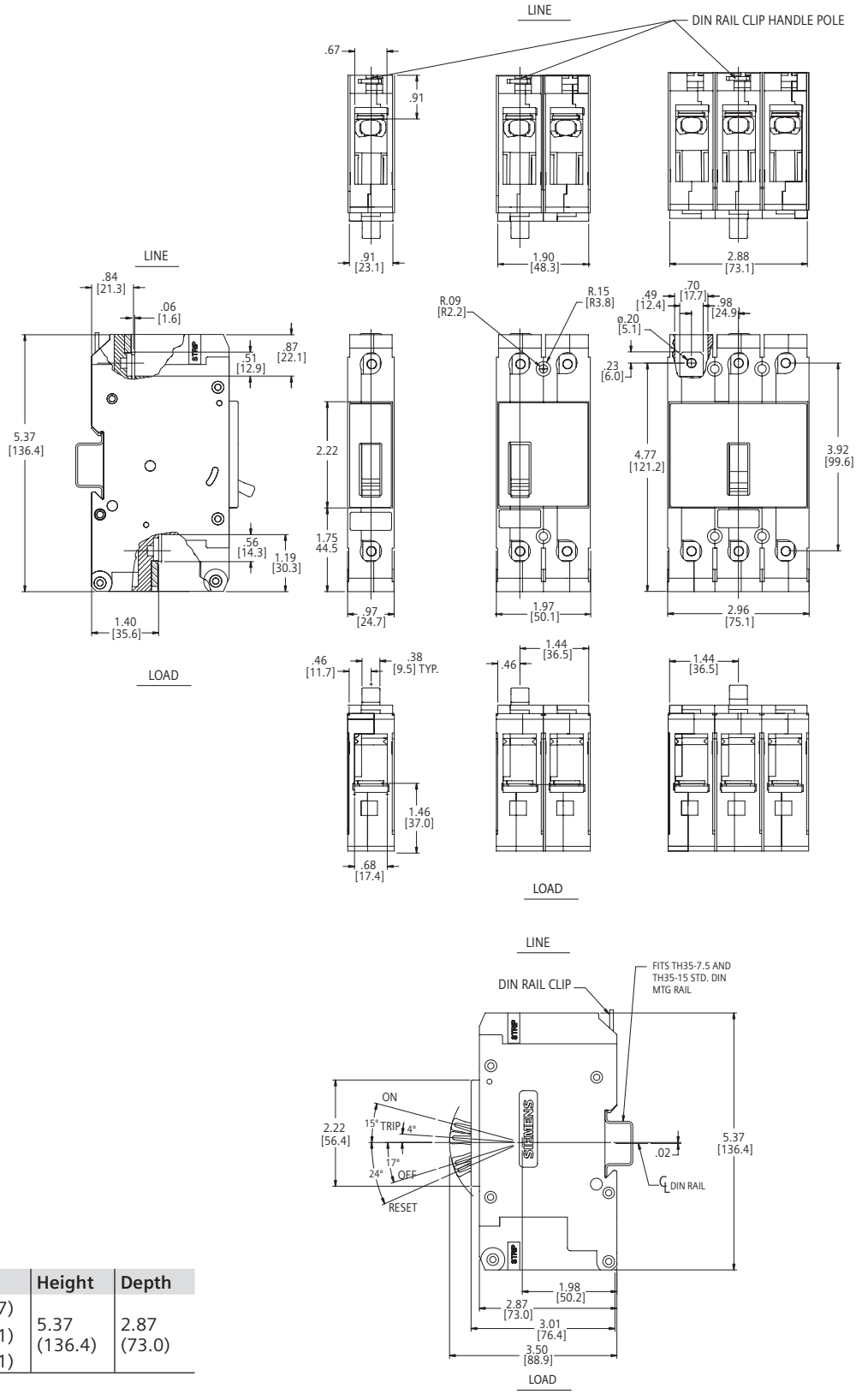


| | Width | Height | Depth |
|---|---|---|---|
| 1 Pole | 0.97 (24.7) | 5.37 (136.4) | 2.87 (73.0) |
| 2 Pole | 1.97 (50.1) | | |
| 3 Pole | 2.96 (75.1) | | |

# Dimensions

**GB Frame Outline Drawing – 1, 2, 3 Pole**

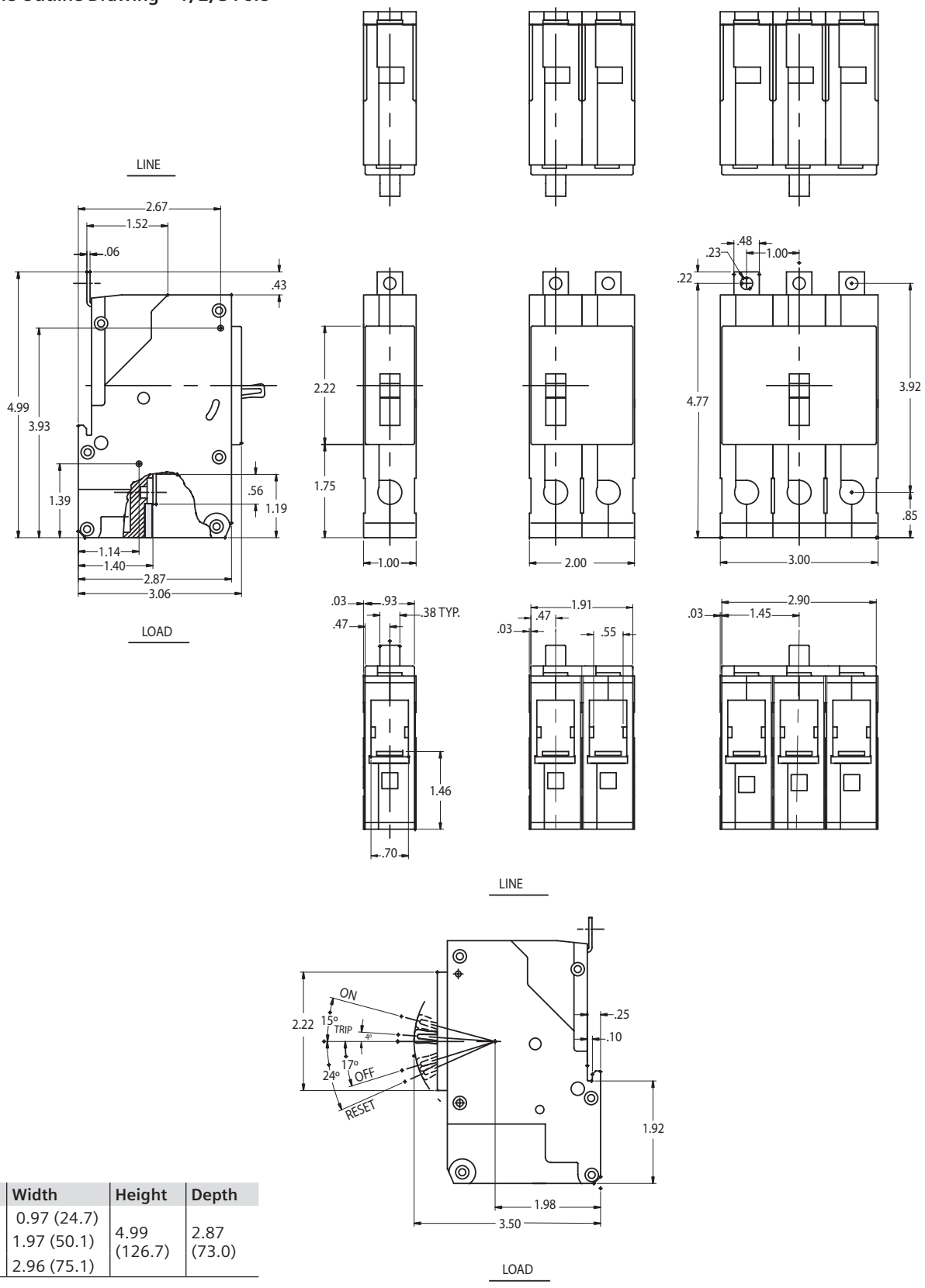


| | Width | Height | Depth |
|---|---|---|---|
| 1 Pole | 0.97 (24.7) | 4.99 (126.7) | 2.87 (73.0) |
| 2 Pole | 1.97 (50.1) | | |
| 3 Pole | 2.96 (75.1) | | |

# GG/GB time current curve – example

**(Contact Siemens for specific curves)**

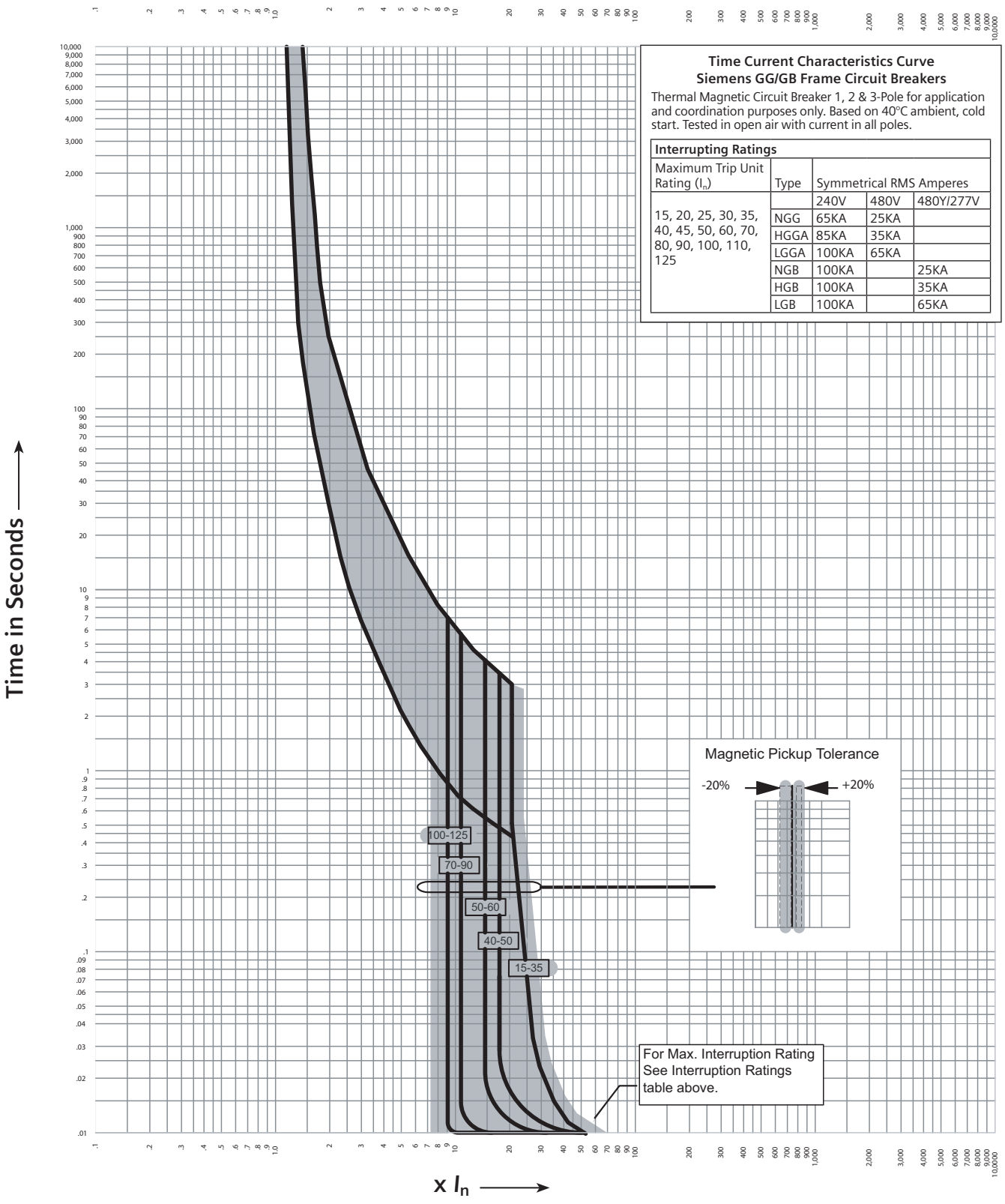

# Application data

**General**
In the application of circuit breakers, consideration should be given to the following factors:
1. Voltage of circuit.
2. Ampacity of circuit.
3. Frequency of power source.
4. Operating conditions.
5. Fault current available.

**Voltage of circuit** – The system voltage should not exceed the listed voltage rating of the circuit breaker, fuse or switch.

**Ampacity of circuit** – The listed continuous current rating of the circuit breaker should not exceed the allowable ampacity of the conductors. Where the allowable ampacity of the conductor does not correspond to listed current ratings for fuses or circuit breakers, the next larger rating of fuses or circuit breakers is permitted providing it does not exceed the conductor ampacity by more than 25%. An exception to this rule is permitted for motor circuits or other circuits where high inrush currents may persist for an appreciable time.

**Frequency of power source** – Circuit breakers are calibrated for use on direct current or 48-60-Hertz alternating current. For frequencies above 62-Hertz, some fuses, switches and circuit breakers must be derated. The derating varies with each type and size of protective device. Consult your local representative for specific information.

**Operating conditions –** Molded case circuit breakers and fuses are calibrated without any enclosure as specified by the Underwriters' Laboratories, Inc. Sound engineering practice dictates that continuous loads should not exceed 80% of the breaker or fuse current rating for most applications.

**Electrical connections –** Molded Case Circuit Breakers are to be connected with 60 or 75°C wire for breakers having a rated ampacity of 125 amperes or less. For circuit breakers having a rated ampacity greater than 125 amperes, only 75°C cable shall be used unless otherwise indicated on the circuit breaker label.

**Note:** Exceptions to this rule are outlined in Article 110-14-C(1) and C(2) of the 2005 National Electric Code.

Conductors should be derated in accordance with the National Electrical Code for both ambient temperature and continuous loading. Conductors which are loaded continuously should be derated to 80% of their allowable current-carrying capacity except when supplied by an assembly including its overcurrent device that is listed for continuous operation at 100% of its rating.

When the type of load is unusual, intermittent, or one which involves momentary peak currents such as motor loads, consideration should be given to the heating effect on the protective device over a period of time. The duty cycle of a motor which is started and stopped frequently may require a circuit breaker or fuses with a higher rating than an infrequently started motor.

The presence of excessive dust, moisture, corrosive fumes, or explosive atmosphere requires the use of enclosures suitable for such atmospheres. For application in regions where fungus growth may occur, some circuit breakers should be treated with a fungus and moisture resistant material.

**Fault current available –** The interrupting rating of the circuit breaker should be greater than the available short circuit current at the point of application. The short circuit current from some power sources, such as engine driven generators, is limited, and the protective device characteristics should be selected to clear such faults without delay.

Some systems require a study of protective device characteristics to assure proper protection and coordination for any possible value of fault current. Your representative is available to assist in making coordination studies.

**Published by**
**Siemens Industry, Inc. 2018.**

Siemens Industry, Inc.
5400 Triangle Parkway
Norcross, GA 30092

For more information, please contact
our Customer Support Center.
Phone: 1-800-241-4453
E-mail: info.us@siemens.com

**usa.siemens.com/switchgear**

Order No.: CBBR-NGGPG-0518 BA
Printed in U.S.A.
© 2018 Siemens Industry, Inc.

The technical data presented in this document is based on an actual case or on as-designed parameters, and therefore should not be relied upon for any specific application and does not constitute a performance guarantee for any projects. Actual results are dependent on variable conditions. Accordingly, Siemens does not make representations, warranties, or assurances as to the accuracy, currency or completeness of the content contained herein. If requested, we will provide specific technical data or specifications with respect to any customer's particular applications. Our company is constantly involved in engineering and development. For that reason, we reserve the right to modify, at any time, the technology and product specifications contained herein.