SIEMENS

Ingenuity for life

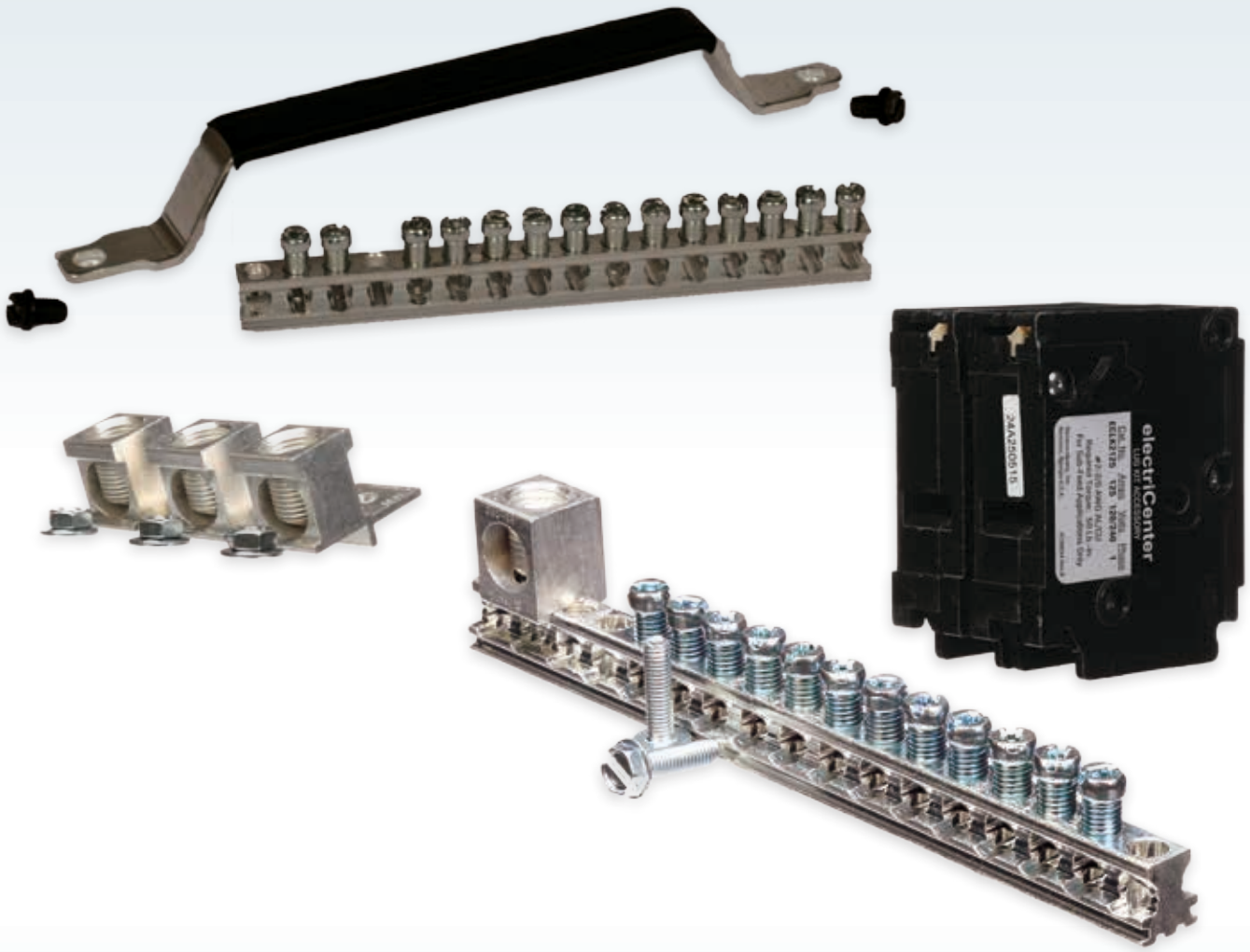

ES & PL Accessory & Replacement Parts Guide

usa.siemens.com/loadcenters

Product Accessories Wiring Diagram Example

The approved accessories for a specific panel, as well as other important technical information, are listed on the wiring diagram/label.

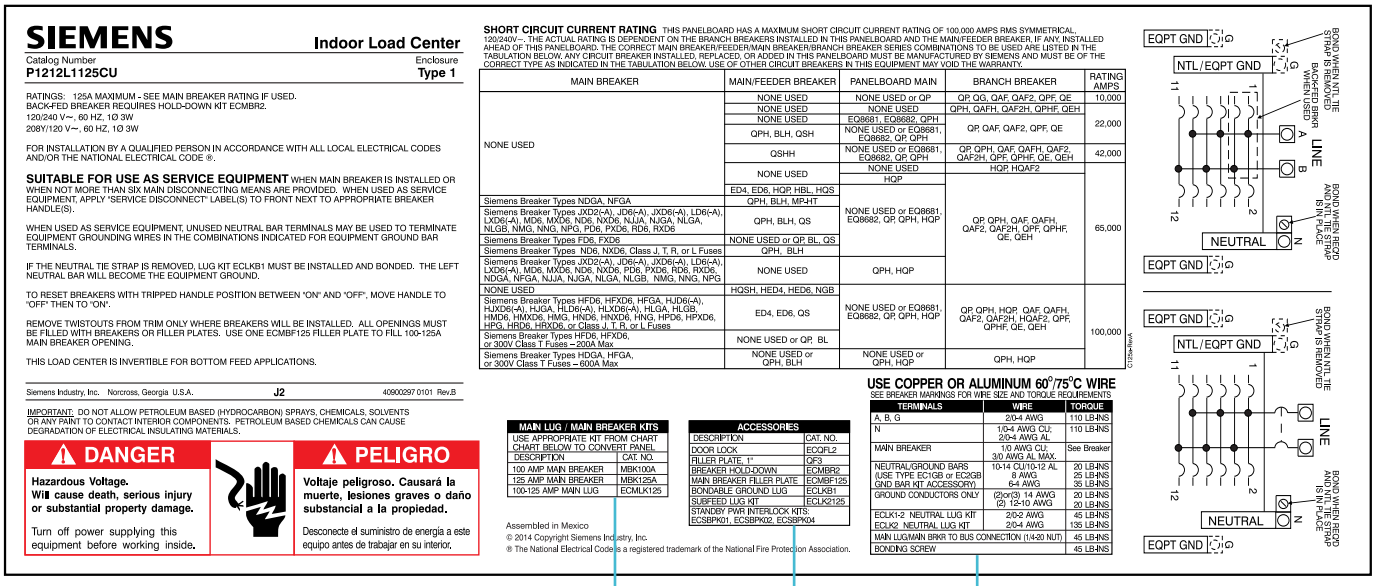

SIEMENS — Indoor Load Center

Catalog Number: P1212L1125CU — Enclosure: Type 1

RATINGS: 125A MAXIMUM - SEE MAIN BREAKER RATING IF USED.
BACK-FED BREAKER REQUIRES HOLD-DOWN KIT ECMBR2.
120/240 V~, 60 HZ, 1Ø 3W
208Y/120 V~, 60 HZ, 1Ø 3W

FOR INSTALLATION BY A QUALIFIED PERSON IN ACCORDANCE WITH ALL LOCAL ELECTRICAL CODES AND/OR THE NATIONAL ELECTRICAL CODE ®.

SUITABLE FOR USE AS SERVICE EQUIPMENT WHEN MAIN BREAKER IS INSTALLED OR WHEN NOT MORE THAN SIX MAIN DISCONNECTING MEANS ARE PROVIDED. WHEN USED AS SERVICE EQUIPMENT, APPLY "SERVICE DISCONNECT" LABEL(S) TO FRONT NEXT TO APPROPRIATE BREAKER HANDLE(S).

WHEN USED AS SERVICE EQUIPMENT, UNUSED NEUTRAL BAR TERMINALS MAY BE USED TO TERMINATE EQUIPMENT GROUNDING WIRES IN THE COMBINATIONS INDICATED FOR EQUIPMENT GROUND BAR TERMINALS.

IF THE NEUTRAL TIE STRAP IS REMOVED, LUG KIT ECLKB1 MUST BE INSTALLED AND BONDED. THE LEFT NEUTRAL BAR WILL BECOME THE EQUIPMENT GROUND.

TO RESET BREAKERS WITH TRIPPED HANDLE POSITION BETWEEN "ON" AND "OFF", MOVE HANDLE TO "OFF" THEN TO "ON".

REMOVE TWISTOUTS FROM TRIM ONLY WHERE BREAKERS WILL BE INSTALLED. ALL OPENINGS MUST BE FILLED WITH BREAKERS OR FILLER PLATES. USE ONE ECMBF125 FILLER PLATE TO FILL 100-125A MAIN BREAKER OPENING.

THIS LOAD CENTER IS INVERTIBLE FOR BOTTOM FEED APPLICATIONS.

Siemens Industry, Inc. Norcross, Georgia U.S.A. J2 40900297 0101 Rev.B

IMPORTANT: DO NOT ALLOW PETROLEUM BASED (HYDROCARBON) SPRAYS, CHEMICALS, SOLVENTS OR ANY PAINT TO CONTACT INTERIOR COMPONENTS. PETROLEUM BASED CHEMICALS CAN CAUSE DEGRADATION OF ELECTRICAL INSULATING MATERIALS.

DANGER
Hazardous Voltage.
Will cause death, serious injury or substantial property damage.
Turn off power supplying this equipment before working inside.

PELIGRO
Voltaje peligroso. Causará la muerte, lesiones graves o daño substancial a la propiedad.
Desconecte el suministro de energía a este equipo antes de trabajar en su interior.

SHORT CIRCUIT CURRENT RATING THIS PANELBOARD HAS A MAXIMUM SHORT CIRCUIT CURRENT RATING OF 100,000 AMPS RMS SYMMETRICAL, 120/240V~. THE ACTUAL RATING IS DEPENDENT ON THE BRANCH BREAKERS INSTALLED IN THIS PANELBOARD AND THE MAIN/FEEDER BREAKER, IF ANY, INSTALLED AHEAD OF THIS PANELBOARD. THE CORRECT MAIN BREAKER/FEEDER/MAIN BREAKER/BRANCH BREAKER SERIES COMBINATIONS TO BE USED ARE LISTED IN THE TABULATION BELOW. ANY CIRCUIT BREAKER INSTALLED, REPLACED, OR ADDED IN THIS PANELBOARD MUST BE MANUFACTURED BY SIEMENS AND MUST BE OF THE CORRECT TYPE AS INDICATED IN THE TABULATION BELOW. USE OF OTHER CIRCUIT BREAKERS IN THIS EQUIPMENT MAY VOID THE WARRANTY.

MAIN BREAKER	MAIN/FEEDER BREAKER	PANELBOARD MAIN	BRANCH BREAKER	RATING AMPS
NONE USED	NONE USED	NONE USED or QP	QP, QG, QAF, QAF2, QPF, QE	10,000
	NONE USED	NONE USED	QPH, QAFH, QAF2H, QPHF, QEH	
	NONE USED	EQ8681, EQ8682, QPH	QP, QAF, QAF2, QPF, QE	22,000
	QPH, BLH, QSH	NONE USED or EQ8681, EQ8682, QP, QPH		
	QSHH	NONE USED or EQ8681, EQ8682, QP, QPH	QP, QPH, QAF, QAFH, QAF2, QAF2H, QPF, QPHF, QE, QEH	42,000
	NONE USED	NONE USED	HQP, HQAF2	
		HQP		
	ED4, ED6, HQP, HBL, HQS	NONE USED or EQ8681, EQ8682, QP, QPH, HQP	QP, QPH, QAF, QAFH, QAF2, QAF2H, QPF, QPHF, QE, QEH	
Siemens Breaker Types NDGA, NFGA	QPH, BLH, MP-HT			65,000
Siemens Breaker Types JXD2(-A), JD6(-A), JXD6(-A), LD6(-A), LXD6(-A), MD6, MXD6, ND6, NXD6, NJJA, NJGA, NLGA, NLGB, NMG, NNG, NPG, PD6, PXD6, RD6, RXD6	QPH, BLH, QS			
Siemens Breaker Types FD6, FXD6	NONE USED or QP, BL, QS			
Siemens Breaker Types ND6, NXD6, Class J, T, R, or L Fuses	QPH, BLH			
Siemens Breaker Types JXD2(-A), JD6(-A), JXD6(-A), LD6(-A), LXD6(-A), MD6, MXD6, ND6, NXD6, PD6, PXD6, RD6, RXD6, NDGA, NFGA, NJJA, NJGA, NLGA, NLGB, NMG, NNG, NPG	NONE USED	QPH, HQP		
NONE USED	HQSH, HED4, HED6, NGB			
Siemens Breaker Types HFD6, HFXD6, HFGA, HJD6(-A), HJXD6(-A), HJGA, HLD6(-A), HLXD6(-A), HLGA, HLGB, HMD6, HMXD6, HMG, HND6, HNXD6, HNG, HPD6, HPXD6, HPG, HRD6, HRXD6, or Class J, T, R, or L Fuses	ED4, ED6, QS	NONE USED or EQ8681, EQ8682, QP, QPH, HQP	QP, QPH, HQP, QAF, QAFH, QAF2, QAF2H, HQAF2, QPF, QPHF, QE, QEH	100,000
Siemens Breaker Types HFD6, HFXD6, or 300V Class T Fuses – 200A Max	NONE USED or QP, BL			
Siemens Breaker Types HDGA, HFGA, or 300V Class T Fuses – 600A Max	NONE USED or QPH, BLH	NONE USED or QPH, HQP	QPH, HQP	

MAIN LUG / MAIN BREAKER KITS

USE APPROPRIATE KIT FROM CHART
CHART BELOW TO CONVERT PANEL

DESCRIPTION	CAT. NO.
100 AMP MAIN BREAKER	MBK100A
125 AMP MAIN BREAKER	MBK125A
100-125 AMP MAIN LUG	ECMLK125

ACCESSORIES

DESCRIPTION	CAT. NO.
DOOR LOCK	ECQFL2
FILLER PLATE, 1"	QF3
BREAKER HOLD-DOWN	ECMBR2
MAIN BREAKER FILLER PLATE	ECMBF125
BONDABLE GROUND LUG	ECLKB1
SUBFEED LUG KIT	ECLK2125
STANDBY PWR INTERLOCK KITS: ECSBPK01, ECSBPK02, ECSBPK04	

USE COPPER OR ALUMINUM 60°/75°C WIRE
SEE BREAKER MARKINGS FOR WIRE SIZE AND TORQUE REQUIREMENTS

TERMINALS	WIRE	TORQUE
A, B, G	2/0-4 AWG	110 LB-INS
N	1/0-4 AWG CU; 2/0-4 AWG AL	110 LB-INS
MAIN BREAKER	1/0 AWG CU; 3/0 AWG AL MAX.	See Breaker
NEUTRAL/GROUND BARS (USE TYPE EC1GB or EC2GB GND BAR KIT ACCESSORY)	10-14 CU/10-12 AL 8 AWG 6-4 AWG	20 LB-INS 25 LB-INS 35 LB-INS
GROUND CONDUCTORS ONLY	(2)or(3) 14 AWG (2) 12-10 AWG	20 LB-INS 20 LB-INS
ECLK1-2 NEUTRAL LUG KIT ECLK2 NEUTRAL LUG KIT	2/0-2 AWG 2/0-4 AWG	45 LB-INS 135 LB-INS
MAIN LUG/MAIN BRKR TO BUS CONNECTION (1/4-20 NUT)		45 LB-INS
BONDING SCREW		45 LB-INS

Assembled in Mexico
© 2014 Copyright Siemens Industry, Inc.
® The National Electrical Code is a registered trademark of the National Fire Protection Association.

EQPT GND — NTL / EQPT GND — NEUTRAL — EQPT GND — LINE — BOND WHEN NTL TIE STRAP IS REMOVED — BOND WHEN BKRD BACK-FED BRKR WHEN USED — BOND WHEN REQD AND NTL TIE STRAP IS IN PLACE

MAIN LUG / MAIN BREAKER KITS
USE APPROPRIATE KIT FROM CHART CHART BELOW TO CONVERT PANEL

DESCRIPTION	CAT. NO.
100 AMP MAIN BREAKER	MBK100A
125 AMP MAIN BREAKER	MBK125A
100-125 AMP MAIN LUG	ECMLK125

Load Center Conversion Kits Page 4

ACCESSORIES

DESCRIPTION	CAT. NO.
DOOR LOCK	ECQFL2
FILLER PLATE, 1"	QF3
BREAKER HOLD-DOWN	ECMBR2
MAIN BREAKER FILLER PLATE	ECMBF125
BONDABLE GROUND LUG	ECLKB1
SUBFEED LUG KIT	ECLK2125
STANDBY PWR INTERLOCK KITS: ECSBPK01, ECSBPK02, ECSBPK04	

Miscellaneous Page 5
Lug Kits Page 3
Interlock Kits Page 6

USE COPPER OR ALUMINUM 60°/75°C WIRE
SEE BREAKER MARKINGS FOR WIRE SIZE AND TORQUE REQUIREMENTS

TERMINALS	WIRE	TORQUE
A, B, G	2/0-4 AWG	110 LB-INS
N	1/0-4 AWG CU; 2/0-4 AWG AL	110 LB-INS
MAIN BREAKER	1/0 AWG CU; 3/0 AWG AL MAX.	See Breaker
NEUTRAL/GROUND BARS (USE TYPE EC1GB or EC2GB GND BAR KIT ACCESSORY)	10-14 CU/10-12 AL 8 AWG 6-4 AWG	20 LB-INS 25 LB-INS 35 LB-INS
GROUND CONDUCTORS ONLY	(2)or(3) 14 AWG (2) 12-10 AWG	20 LB-INS 20 LB-INS
ECLK1-2 NEUTRAL LUG KIT ECLK2 NEUTRAL LUG KIT	2/0-2 AWG 2/0-4 AWG	45 LB-INS 135 LB-INS
MAIN LUG/MAIN BRKR TO BUS CONNECTION (1/4-20 NUT)		45 LB-INS
BONDING SCREW		45 LB-INS

Ground Bars Page 3
Lug Kits Page 3

Ground Bar Kits

See Load Center Product Accessories Grid for more details.

Ground Bars

Catalog No.		Description
EC1GB	EC1GB8	Ground Bar Kit-8 Pos
	EC1GB82	Ground Bar Kit-8 Pos, 2/0 Lug
EC2GB	EC2GB12	Ground Bar Kit-12 Pos
	EC2GB122	Ground Bar Kit-12 Pos, 2/0 Lug
	EC2GB15	Ground Bar Kit-15 Pos
	EC2GB152	Ground Bar Kit-15 Pos, 2/0 Lug
EC3GB	EC3GB21	Ground Bar Kit-21 Pos
	EC3GB212	Ground Bar Kit-21 Pos, 2/0 Lug
	EC3GB27	Ground Bar Kit-27 Pos
	EC3GB272	Ground Bar Kit-27 Pos, 2/0 Lug
	EC3GB30	Ground Bar Kit-30 Pos
	EC3GB302	Ground Bar Kit-30 Pos, 2/0 Lug
	EC3GB352	Ground Bar Kit-35 Pos, 2/0 Lug
	EC3GB352G	Ground Bar Kit-35 Pos, 2/0 Lug



Ground Bar Kit without Lug
EC2GB12



Ground Bar Kit with Lug
EC2GB122

Lug Kits

See Load Center Product Accessories Grid for more details.

Catalog No.	Description
ECLKB1	Neutral Lug Kit With Bond Tab
ECLK1-2	Neutral Lug Kit #2 To 1/0
ECLK2	Neutral Lug Kit #4-2/0
ECLK3	Neutral Lug Kit #1-300
ECLK2125	125A Sub Feed Lugs (Uses 2 Spaces)
ECLK2225	150A-225A Sub Feed Lugs (Uses 4 Spaces)
ECLK3225	3P Sub Feed Lugs (Uses 6 Spaces)
ECCS1	Collar Strap For Grd Bars #14-1/0
ECCS2	Collar Strap For Grd Bars #6-250
ECRLK250	Riser Lug Kit 250 kcmil
ECLK2SC	2/0 Lug For 125 A Neutral Feeder

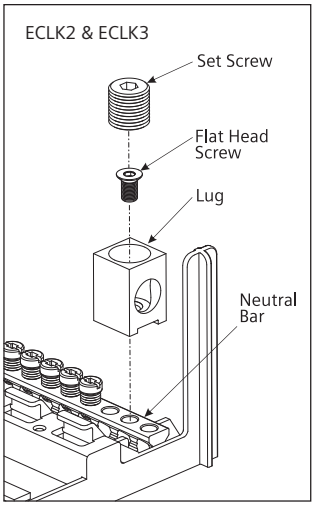

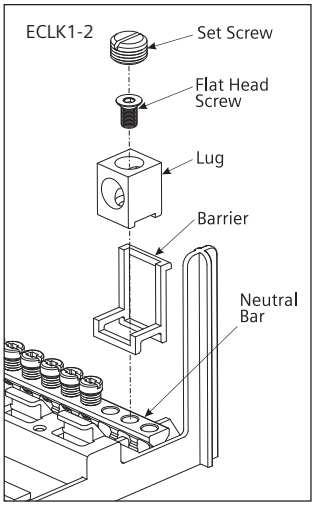

Neutral Bar Kits

Catalog Number	Description
ECLNB14	MLO Neutral Bar Kit - 14 Pos
ECCNB16	Convertible LC Neutral Bar Kit - 16 Pos

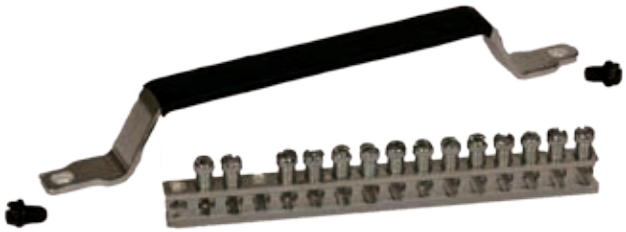

Neutral Bar Kit ECLNB14

Main Breaker Conversion Kits

See Load Center Product Accessories Grid for more details.

Single Phase Main Breaker Kits

Catalog No.	Amperage	Phase	AIC
MBK100A	100A	1PH	22K
MBK125A	125A	1PH	22K
MBK150A	150A	1PH	22K
MBK200A	200A	1PH	22K
MBK225A	225A	1PH	22K



MBK100A
125A



MBK150A
200A, 225A

Three Phase Main Breaker Kits

Catalog No.	Amperage	Phase	AIC
MBK3100	100A	3PH	10K
MBK3125R	125A	3PH	10K
MBK3150R	150A	3PH	10K
MBK3175R	175A	3PH	10K
MBK3200R	200A	3PH	10K
MBK3225R	225A	3PH	10K
MBK3125HR	125A	3PH	22K
MBK3150HR	150A	3PH	22K
MBK3175HR	175A	3PH	22K
MBK3200HR	200A	3PH	22K
MBK3225HR	225A	3PH	22K
MBK3125HHR	125A	3PH	65K
MBK3150HHR	150A	3PH	65K
MBK3175HHR	175A	3PH	65K
MBK3200HHR	200A	3PH	65K
MBK3225HHR	225A	3PH	65K
HMBK3125HR	125A	3PH	100K
HMBK3150HR	150A	3PH	100K
HMBK3175HR	175A	3PH	100K
HMBK3200HR	200A	3PH	100K
HMBK3225HR	225A	3PH	100K



ECLK2125



ECLK3225

Main Lug Conversion Kits

Catalog No.	Amperage	Phase
ECMLK125	100-125A	1PH
ECMLK225	150-225A	1PH
ECMLK3125	100-125A	3PH
ECMLK3225	150-225A	3PH



ECMLK3225

Hubs

Catalog No.		Description	Hub Type	Picture	Application
ECHS	ECHS000	HS Type Closure Plate	ECHS	 ECHS100	N3R PL & ES, Small Circuit Load Centers (except W0204ML1060)
	ECHS075	HS Type Hub - 3/4"			
	ECHS100	HS Type Hub - 1"			
	ECHS125	HS Type Hub - 1 1/4"			
	ECHS150	HS Type Hub - 1 1/2"			
	ECHS200	HS Type Hub - 2"			
	ECHS250	HS Type Hub - 2 1/2"			
ECHA	ECHA000	HA Type Closure Plate	ECHA	 ECHA125	W0204ML1060
	ECHA075	HA Type Hub - 3/4'			
	ECHA100	HA Type Hub - 1"			
	ECHA125	HA Type Hub - 1 1/4"			
	ECHA150	HA Type Hub - 1 1/2"			
ECHV	ECHV000	HV Type Closure Plate	ECHV	 ECHV200	350-400A N3R Load Centers
	ECHV200	HV Type Hub - 2"			
	ECHV250	HV Type Hub - 2.5"			
	ECHV300	HV Type Hub 3"			
	ECHV350	HV Type Hub - 3.5"			
	ECHV400	HV Type Hub - 4"			

Lock Kits

Catalog No.	Description
ECQFL1	Flush Lock Kit-Replacement For EQ LC
ECQFL2	Flush Lock Kit For ULT., PL, ES, 3Ph, 100A-225A
ECQFL3	Add-A-Lock (Flush Lock) For 300-400A LC


ECQFL2


ECQFL3

Miscellaneous Load Center Accessories

Catalog No.	Description	Pack Qty.
ECCP1	Pkg of 100 Circuit Directory	100
ECQF3	QP/BQ/ED2 Filler Plate	5
ECMBF125	1 Ph 100 & 125A Main Breaker Filler Plate	1
EC3PMFP1	3 Pole Main Filler Plate, QJ	1
EC3PMFPR	3 Pole Main Filler Plate, QR	1
ECSMK1	Surface Mount 1/4" Space Kit For LC's	4
ECTS2	LC Trim Screws	6
ECTS2W	LC Trim Screws White	6
ECLCHINGE	Grey LC Hinges	100
ECADHLCDIRLBL	Adhesive LC Directory Labels	100
ECSIELATCH	Siemens LC Latches	25
ECBONDSCRW	LC Bond Screw	10
ECAFL	Arc Flash Label	10
ECSN1	Screws and Nuts For HC Hub-Bottom Use	4


ECQF3


ECTS2


ECLCHINGE



ECSIELATCH


ECBONDSCRW

Manual Transfer Interlock Kits for Load Centers and Meter Combinations①

Prevents dangerous feedback between two sources of power

Manual Transfer Interlock Kits①

Catalog Number	Usage Information	Utility Main Breaker Types	Standby Main Breaker Types	Interlock Number
ECSBPK01 	For use on load centers or meter combinations that will accept 2-pole circuit breakers opposite one another as shown.	QP, QPH, HQPH	QP, QPH, HQPH	1 
ECSBPK02 	For use on load centers or meter combinations that will accept 2- or 4-pole next to a 2-pole circuit breaker side by side as shown.	QP, QPH, HQPH	QP, QPH, HQPH	2 
ECSBPK03② 	For use on UltimateTM and Rock Solid load centers, 150 amp and higher, to connect the main breaker to a 2-pole circuit breaker.	MBK150A, MBK200A,or MBK225A	QP, QPH, HQPH	3 
ECSBPK04② 	For use on Ultimate and Rock Solid load centers, 125 amp and lower, to connect the main breaker to a 2-pole circuit breaker.	MBK100A or MBK125A	QP, QPH, HQPH	4 
ECSBPK05 	For use on load centers or meter meter combinations that will accept a QNR (MD-TR) frame circuit breaker next to a 2-pole circuit breaker as shown.	QNR, QNRH, HQNR	QP, QPH, HQPH	5 
ECSBPK06② 	For use on load centers or meter combinations that will accept a QN (MD-T) frame circuit breaker next to a 2-pole circuit breaker as shown.	QN, QNH, HQN	QP, QPH, HQPH	6 
ECSBPK07 	For use on load centers or meter combinations that will accept two QNR (MD--TR) circuit breakers side by side as shown OR will accept two QN (MD--T) circuit breakers side by side as shown.	QNR, QNRH, HQNR, QN, QNH, HQN	QNR, QNRH, HQNR QN, QNH, HQN	7 
ECSBPK08② 	For use on 8 space, over/under, OH/UG feed meter combinations as shown. Limited application to specific catalog numbers.	QPP, QPPH	QP, QPH, HQPH	8 
ECSBPK09② 	For use on 20 space, over/under, OH/UG feed meter combinations as shown. Limited application to specific catalog numbers.	QPP, QPPH	QP, QPH, HQPH	9 

① Manual breaker interlock kits are attached to the breakers not the trim of the load center.

② These kits take up 2 spaces adjacent to the 2 pole breaker being interlocked. Those spaces cannot accommodate filler plates.

Table of Contents

Load Center Product Accessory Grids	
PL Series – N1, Single Phase	7 - 8
ES Series – N1, Single Phase	9 - 10
PL Series – N3R, Single Phase	11
ES Series – N3R, Single Phase	12
PL Series – N1, Three Phase	13
PL Series – N3R, Three Phase	13
ES Series – N1, Three Phase	14
ES Series – N3R, Three Phase	14
Replacement Part Grids	
1 Phase PL Series	15 - 16
1 Phase ES Series	17 - 18
3 Phase PL & ES Series	19

Load Center Product Accessory Grid

PL Series – N1, Single Phase

	Ground Bars and Lug Kits								Load Center Conversion Kits							Interlock Kits						
Catalog Number	EC1GB	EC2GB	EC3GB	ECLK3	ECLK1-2	ECLK2	ECLK2125	ECLK2225	MBK100A	MBK125A	MBK150A	MBK200A	MBK225A	ECMLK125	ECMLK225	ECSBPK01	ECSBPK02	ECSBPK03	ECSBPK04	ECSBPK05	ECSBPK06	ECSBPK07
P1212L1125CU	•	•			•	•	•		•	•				•		•	•		•			
P1224B1100CU	•	•			•	•	•		•					•					•			
P1224L1125CU	•	•			•	•	•		•	•				•		•	•		•			
P1224L1125CUSG	•	•			•	•	•		•	•				•		•	•		•			
P1224L1200CU		•	•	•	•	•	•	•			•	•			•	•	•	•		•		•
P1624B1100CU	•	•			•	•	•		•					•					•			
P1624L1125CU	•	•			•	•	•		•	•				•		•	•		•			
P1624L1125CUSG	•	•			•	•	•		•	•				•		•	•		•			
P2020B1100CU		•	•		•	•	•		•					•					•			
P2020L1125CU		•	•		•	•	•		•	•				•		•	•		•			
P2024B1100CU		•	•		•	•	•		•					•					•			
P2024L1125CU		•	•		•	•	•		•	•				•		•	•		•			
P2030B1150CU		•	•	•	•	•	•				•				•			•				
P2030L1125CUSG		•	•		•	•	•		•	•				•		•	•		•			
P2030L1150CU		•	•	•	•	•	•				•				•	•	•	•		•		•
P2030L1150CUSG		•	•	•	•	•	•				•				•	•	•	•		•		•
P2040B1200CU		•	•	•	•	•	•	•			•	•			•			•				
P2040L1125ACU		•	•		•	•	•		•	•				•		•	•		•			
P2040L1200CU		•	•	•	•	•	•	•			•	•			•	•	•	•		•		•
P2424B1100CU		•	•		•	•	•		•					•					•			
P2430L1125CUSG		•	•		•	•	•		•	•				•		•	•		•			

Load Center Product Accessory Grid

PL Series – N1, Single Phase (cont.)

Catalog Number	Ground Bars and Lug Kits								Load Center Conversion Kits							Interlock Kits						
	EC1GB	EC2GB	EC3GB	ECLK3	ECLK1-2	ECLK2	ECLK2125	ECLK2225	MBK100A	MBK125A	MBK150A	MBK200A	MBK225A	ECMLK125	ECMLK225	ECSBPK01	ECSBPK02	ECSBPK03	ECSBPK04	ECSBPK05	ECSBPK06	ECSBPK07
P2440L1125CU		•	•		•	•	•		•	•				•		•	•		•			
P2440L1200CU		•	•	•	•	•	•	•			•	•			•	•	•	•		•		•
P3030B1100CU		•	•		•	•	•		•					•					•			
P3030B1125CU		•	•		•	•	•		•	•				•					•			
P3030B1150CU		•	•	•	•	•	•				•				•			•				
P3030L1200CU		•	•	•	•	•	•	•			•	•			•	•	•	•		•		•
P3040B1200		•	•	•	•	•	•	•			•	•			•			•				
P3040B1200CU		•	•	•	•	•	•	•			•	•			•			•				
P3040L1125CU		•	•		•	•	•		•	•				•		•	•		•			
P3040L1200		•	•	•	•	•	•	•			•	•			•	•	•	•		•		•
P3040L1200CU		•	•	•	•	•	•	•			•	•			•	•	•	•		•		•
P3040L1200CUSG		•	•	•	•	•	•	•			•	•			•	•	•	•		•		•
P3040L1200SG		•	•	•	•	•	•	•			•	•			•	•	•	•		•		•
P3054B1200S140		•	•	•	•	•	•	•			•	•			•	•	•	•		•		•
P3054L1200CU		•	•	•	•	•	•	•			•	•			•	•	•	•		•		•
P3060B1200ACU		•	•		•	•	•	•			•	•			•			•				
P3060L1125ACU		•	•		•	•	•		•	•				•		•	•		•			
P3060L1200ACU		•	•	•	•	•	•	•			•	•			•	•	•	•		•		•
P4040B1200		•	•	•	•	•	•	•			•	•			•			•				
P4040B1200CU		•	•	•	•	•	•	•			•	•			•			•				
P4040B1200CUSG		•	•	•	•	•	•	•			•	•			•			•				
P4040L1125CU		•	•		•	•	•		•	•				•		•	•		•			
P4040L1200		•	•	•	•	•	•	•			•	•			•	•	•	•		•		•
P4040L1200CU		•	•	•	•	•	•	•			•	•			•	•	•	•		•		•
P4040L1200CUSG		•	•	•	•	•	•	•			•	•			•	•	•	•		•		•
P4040L1200SG		•	•	•	•	•	•	•			•	•			•	•	•	•		•		•
P4060B1200S140		•	•	•	•	•	•	•			•	•			•	•	•	•		•		•
P4080B1200ACU		•	•	•	•	•	•	•			•	•			•			•				
P4260B1225CU			•	•	•	•	•	•			•	•	•		•			•				
P4260L1225CU			•	•	•	•	•	•			•	•	•		•	•	•	•		•		•
P4260L1225CUSG			•	•	•	•	•	•			•	•	•		•	•	•	•		•		•
P5470B1200CU			•	•	•	•	•	•			•	•			•			•				
P5470B1225CU			•	•	•	•	•	•			•	•	•		•			•				
P5470L1225CU			•	•	•	•	•	•			•	•	•		•	•	•	•		•		•

Load Center Product Accessory Grid

ES Series – N1, Single Phase

	Ground Bars and Lug Kits								Load Center Conversion Kits							Interlock Kits						
Catalog Number	EC1GB	EC2GB	EC3GB	ECLK3	ECLK1-2	ECLK2	ECLK2125	ECLK2225	MBK100A	MBK125A	MBK150A	MBK200A	MBK225A	ECMLK125	ECMLK225	ECSBPK01	ECSBPK02	ECSBPK03	ECSBPK04	ECSBPK05	ECSBPK06	ECSBPK07
S1020B1100	•	•			•	•	•		•										•			
S1212L1125	•	•			•	•	•							•		•	•					
S1224B1100	•	•			•	•	•		•										•			
S1224L1125	•	•			•	•	•							•		•	•					
S1224L1200	•	•		•	•	•	•	•							•	•	•			•		•
S1624B1100	•	•			•	•	•		•										•			
S1624B1125	•	•			•	•	•		•	•									•			
S1624L1125	•	•			•	•	•							•		•	•					
S1630B1150		•	•	•	•	•	•				•							•				
S1632B1200		•	•	•	•	•	•	•			•	•						•				
S2020B1100		•	•		•	•	•		•										•			
S2020L1125	•	•			•	•	•							•		•	•					
S2020L1125G	•	•			•	•	•							•		•	•					
S2024B1100		•	•		•	•	•		•										•			
S2024L1125	•	•			•	•	•							•		•	•					
S2024L1125G	•	•			•	•	•							•		•	•					
S2030B1150		•	•	•	•	•	•				•							•				
S2030L1150		•	•	•	•	•	•								•	•	•			•		•
S2040B1200		•	•	•	•	•	•	•			•	•						•				
S2040C1200		•	•	•	•	•	•	•			•	•			•	•	•	•		•		•
S2040L1200		•	•	•	•	•	•	•							•	•	•			•		•
S2424B1125		•	•		•	•	•		•	•									•			
S2424C1125		•	•		•	•	•		•	•					•	•	•		•			
S2424L1125		•	•		•	•	•							•		•	•					
S2424L1125G		•	•		•	•	•							•		•	•					
S2430B1150		•	•	•	•	•	•				•				•			•				
S2440B1200		•	•	•	•	•	•	•			•	•						•				
S2440L1125		•	•		•	•	•							•		•	•					
S2440L1125G		•	•		•	•	•							•		•	•					
S2440L1200		•	•		•	•	•								•	•	•			•		•
S3030B1100		•	•		•	•	•		•										•			
S3030B1125		•	•		•	•	•		•	•									•			
S3030B1150		•	•	•	•	•	•				•							•				
S3030L1200		•	•	•	•	•	•	•							•	•	•			•		•
S3040B1125		•	•		•	•	•		•	•									•			
S3040B1150		•	•	•	•	•	•				•							•				
S3040B1200		•	•	•	•	•	•	•			•	•						•				
S3040C1200		•	•	•	•	•	•	•			•	•			•	•	•	•		•		•

Load Center Product Accessory Grid

ES Series – N1, Single Phase (cont.)

Catalog Number	Ground Bars and Lug Kits								Load Center Conversion Kits							Interlock Kits						
	EC1GB	EC2GB	EC3GB	ECLK3	ECLK1-2	ECLK2	ECLK2125	ECLK2225	MBK100A	MBK125A	MBK150A	MBK200A	MBK225A	ECMLK125	ECMLK225	ECSBPK01	ECSBPK02	ECSBPK03	ECSBPK04	ECSBPK05	ECSBPK06	ECSBPK07
S3040L1125		•	•		•	•	•							•		•	•					
S3040L1125G		•	•		•	•	•							•		•	•					
S3040L1200		•	•	•	•	•	•	•							•	•	•			•		•
S3040L1200L50		•	•	•	•	•	•	•							•	•	•			•		•
S3054L1200		•	•	•	•	•	•	•							•	•	•			•		•
S4040B1200		•	•	•	•	•	•	•			•	•						•				
S4040C1200		•	•	•	•	•	•	•			•	•			•	•	•	•		•		•
S4040L1125		•	•		•	•	•							•		•	•					
S4040L1200		•	•	•	•	•	•	•							•	•	•			•		•
S4260B1225			•	•	•	•	•	•			•	•	•					•				
S4260L1225		•	•	•	•	•	•	•							•	•	•			•		•
S5470B1200			•	•	•	•	•	•			•	•						•				
S5470B1225			•	•	•	•	•	•			•	•	•					•				
S5470L1225			•	•	•	•	•	•							•	•	•			•		•

Load Center Product Accessory Grid

PL Series – N3R, Single Phase

Catalog Number	Ground Bars and Lug Kits								Load Center Conversion Kits							Interlock Kits						
	EC1GB	EC2GB	EC3GB	ECLK3	ECLK1-2	ECLK2	ECLK2125	ECLK2225	MBK100A	MBK125A	MBK150A	MBK200A	MBK225A	ECMLK125	ECMLK225	ECSBPK01	ECSBPK02	ECSBPK03	ECSBPK04	ECSBPK05	ECSBPK06	ECSBPK07
PW0816B1200TC	•	•		•	•	•					•	•			•			•				
PW0816L1200TC	•	•		•	•	•					•	•			•	•	•	•		•		•
PW1212L1125CU	•	•			•	•	•		•	•				•		•	•		•			
PW1224B1100CU	•	•			•	•	•		•					•					•			
PW1224L1125CU	•	•			•	•	•		•	•				•		•	•		•			
PW1224L1200CU	•	•		•	•	•	•	•			•	•			•	•	•	•		•		•
PW1224L1225CU		•	•	•	•	•	•	•			•	•	•		•	•	•	•		•		•
PW1624B1100CU	•	•			•	•	•		•					•					•			
PW1624L1125CU	•	•			•	•	•		•	•				•		•	•		•			
PW2020B1100CU		•	•		•	•	•		•					•					•			
PW2030B1150CU		•	•	•	•	•	•				•				•			•				
PW2030L1150CU		•	•	•	•	•	•				•				•	•	•	•		•		•
PW2040B1200CU		•	•	•	•	•	•	•			•	•			•			•				
PW2040L1200CU		•	•	•	•	•	•	•			•	•			•	•	•	•		•		•
PW3040B1100CU			•		•	•	•		•					•					•			
PW3040B1125CU			•		•	•	•		•	•				•					•			
PW3040B1150CU			•	•	•	•	•	•			•				•			•				
PW3040B1200CU			•	•	•	•	•	•			•	•			•			•				
PW3040L1125CU			•		•	•	•		•	•				•		•	•		•			
PW3040L1200CU			•	•	•	•	•	•			•	•			•	•	•	•		•		•
PW3054L1200CU			•	•	•	•	•	•			•	•			•	•	•	•		•		•
PW4040B1200CU			•	•	•	•	•	•			•	•			•			•				
PW4040L1200CU			•	•	•	•	•	•			•	•			•	•	•	•		•		•
PW4260B1225CU			•	•	•	•	•	•			•	•	•		•			•				
PW4260L1225CU			•	•	•	•	•	•			•	•	•		•	•	•	•		•		•

Load Center Product Accessory Grid

ES Series – N3R, Single Phase

Catalog Number	Ground Bars and Lug Kits								Load Center Conversion Kits							Interlock Kits						
	EC1GB	EC2GB	EC3GB	ECLK3	ECLK1-2	ECLK2	ECLK2125	ECLK2225	MBK100A	MBK125A	MBK150A	MBK200A	MBK225A	ECMLK125	ECMLK225	ECSBPK01	ECSBPK02	ECSBPK03	ECSBPK04	ECSBPK05	ECSBPK06	ECSBPK07
SW0816B1200T	•	•		•	•	•					•	•			•			•				
SW0816L1200T	•	•		•	•	•					•	•			•	•	•			•		•
SW1212L1125	•	•			•	•	•		•					•		•	•					
SW1224B1100	•	•			•	•	•		•					•					•			
SW1224B1125	•	•			•	•	•		•	•				•					•			
SW1224L1125	•	•			•	•	•		•	•				•		•	•					
SW1224L1200	•	•		•	•	•	•	•			•	•			•	•	•			•		•
SW1224L1225	•	•		•	•	•	•	•					•		•	•	•			•		•
SW1624B1100	•	•			•	•	•		•					•					•			
SW1624L1125	•	•			•	•	•		•	•				•		•	•					
SW2020B1100		•	•		•	•	•		•					•					•			
SW2024B1125		•	•		•	•	•		•	•				•					•			
SW2030L1150		•	•	•	•	•	•				•				•	•	•			•		•
SW2040B1200		•	•	•	•	•	•	•			•	•			•			•				
SW2040C1200		•	•	•	•	•	•	•			•	•			•	•	•	•		•		•
SW2040L1200		•	•	•	•	•	•	•			•	•			•	•	•			•		•
SW2424B1125		•	•		•	•	•		•	•				•					•			
SW2424C1125		•	•		•	•	•		•	•				•		•	•		•			
SW2424L1125		•	•		•	•	•		•	•				•		•	•					
SW3040B1125			•		•	•	•		•	•				•					•			
SW3040B1150			•	•	•	•	•	•			•				•			•				
SW3040B1200			•	•	•	•	•	•										•				
SW3040C1200			•	•	•	•	•	•			•	•			•	•	•	•		•		•
SW3040L1125			•		•	•	•		•	•				•		•	•					
SW3040L1200			•	•	•	•	•	•			•	•			•	•	•			•		•
SW3054L1200			•	•	•	•	•	•			•	•			•	•	•			•		•
SW4040B1150			•	•	•	•	•	•			•				•			•				
SW4040B1200			•	•	•	•	•	•			•	•			•			•				
SW4040C1200			•	•	•	•	•	•			•	•			•	•	•	•		•		•
SW4040L1200			•	•	•	•	•	•			•	•			•	•	•			•		•
SW4260B1225			•	•	•	•	•	•					•		•			•				
SW4260L1225			•	•	•	•	•	•					•		•	•	•			•		•

Load Center Product Accessory Grid

PL Series – N1, Three Phase

Catalog Number	Ground Bars and Lug Kits			Load Center Conversion Kits						Interlock Kits							
	EC1GB	EC2GB	EC3GB	ECLK3	ECLK1-2	ECLK2	ECLK2125	ECLK2225	ECLK3225	MBK3100	MBK3125	MBK3150	MBK3175	MBK3200	MBK3225	ECMLK3125	ECMLK3225
P1224B3100CU		•	•		•	•	•			•						•	
P1224L3125CU		•			•	•	•			•						•	
P2442B3150CU			•	•	•	•	•	•	•	•	•	•					•
P2442L3200CU			•	•	•	•	•	•	•	•	•	•	•	•			•
P3030B3125CU			•		•	•	•			•	•					•	
P3042B3100CU			•		•	•	•			•						•	
P3054B3200CU			•	•	•	•	•	•	•	•	•	•	•	•			•
P3054L3200CU			•	•	•	•	•	•	•	•	•	•	•	•			•
P4242B3150CU			•	•	•	•	•	•	•	•	•	•					•
P4260B3200CU			•	•	•	•	•	•	•	•	•	•	•	•			•
P4260B3225CU			•	•	•	•	•	•	•	•	•	•	•	•	•		•
P4260B3225TCU			•	•	•	•	•	•	•	•	•	•	•	•	•		•
P4260L3225CU			•	•	•	•	•	•	•	•	•	•	•	•	•		•
P5470B3225CU			•	•	•	•	•	•	•	•	•	•	•	•	•		•
P5470L3225CU			•	•	•	•	•	•	•	•	•	•	•	•	•		•

Load Center Product Accessory Grid

PL Series – N3R, Three Phase

Catalog Number	Ground Bars and Lug Kits			Load Center Conversion Kits						Interlock Kits							
	EC1GB	EC2GB	EC3GB	ECLK3	ECLK1-2	ECLK2	ECLK2125	ECLK2225	ECLK3225	MBK3100	MBK3125	MBK3150	MBK3175	MBK3200	MBK3225	ECMLK3125	ECMLK3225
PW1224L3125CU		•			•	•	•			•						•	
PW2442L3200CU			•	•	•	•	•	•	•	•	•	•	•	•			•
PW3054B3200CU			•	•	•	•	•	•	•	•	•	•	•	•			•
PW3054L3200CU			•	•	•	•	•	•	•	•	•	•	•	•			•
PW4260B3200CU			•	•	•	•	•	•	•	•	•	•	•	•			•
PW4260L3225CU			•	•	•	•	•	•	•	•	•	•	•	•	•		•

Load Center Product Accessory Grid

ES Series – N1, Three Phase

Catalog Number	Ground Bars and Lug Kits			Load Center Conversion Kits						Interlock Kits							
	EC1GB	EC2GB	EC3GB	ECLK3	ECLK1-2	ECLK2	ECLK2125	ECLK2225	ECLK3225	MBK3100	MBK3125	MBK3150	MBK3175	MBK3200	MBK3225	ECMLK3125	ECMLK3225
S1224B3100		•	•		•	•	•			•						•	
S1224L3125		•			•	•	•			•						•	
S1224L3200		•		•	•	•	•	•	•	•							•
S1836L3150		•	•	•	•	•	•	•	•	•							•
S2442B3150			•	•	•	•	•	•	•	•	•	•					•
S2442L3150			•	•	•	•	•	•	•	•							•
S2442L3200			•	•	•	•	•	•	•	•							•
S3030B3100			•		•	•	•			•						•	
S3042B3100			•		•	•	•			•						•	
S3042B3125			•		•	•	•			•	•					•	
S3054B3150			•	•	•	•	•	•	•	•	•	•					•
S3054B3200			•	•	•	•	•	•	•	•	•	•	•	•			•
S3054L3200			•	•	•	•	•	•	•	•							•
S4242B3150			•	•	•	•	•	•	•	•	•	•					•
S4242B3225			•	•	•	•	•	•	•	•	•	•	•	•	•		•
S4260B3200			•	•	•	•	•	•	•	•	•	•	•	•			•
S4260L3225			•	•	•	•	•	•	•	•							•
S5470L3225			•	•	•	•	•	•	•	•							•

Load Center Product Accessory Grid

ES Series – N3R, Three Phase

Catalog Number	Ground Bars and Lug Kits			Load Center Conversion Kits						Interlock Kits							
	EC1GB	EC2GB	EC3GB	ECLK3	ECLK1-2	ECLK2	ECLK2125	ECLK2225	ECLK3225	MBK3100	MBK3125	MBK3150	MBK3175	MBK3200	MBK3225	ECMLK3125	ECMLK3225
SW1224L3125		•			•	•	•			•						•	
SW1224L3200		•		•	•	•	•			•							•
SW1836L3150			•	•	•	•	•	•	•	•							•
SW2442B3150			•	•	•	•	•	•	•	•	•	•					•
SW2442L3150			•	•	•	•	•	•	•	•							•
SW2442L3200			•	•	•	•	•	•	•	•							•
SW3054B3200			•	•	•	•	•	•	•	•	•	•	•	•			•
SW3054L3200			•	•	•	•	•	•	•	•							•
SW4242B3225			•	•	•	•	•	•	•	•	•	•	•	•	•		•
SW4260B3200			•	•	•	•	•	•	•	•	•	•	•	•			•
SW4260L3225			•	•	•	•	•	•	•	•							•

Replacement Part Grid

1 Phase PL Series

Load Center Catalog Number	Replacement Trim Kit Catalog Number	Hinge Catalog Number	Door Latch Catalog Number	Trim Screw Catalog Number	Bond Screw Catalog Number	Directory Label Catalog Number
P1212L1125CU	RPT1212X1125	ECLCHINGE	ECSIELATCH	ECTS2	ECBONDSCRW	ECADHLCDIRLBL
P1224B1100CU	RPT1224X1100	ECLCHINGE	ECSIELATCH	ECTS2	ECBONDSCRW	ECADHLCDIRLBL
P1224L1125CU	RPT1224X1125	ECLCHINGE	ECSIELATCH	ECTS2	ECBONDSCRW	ECADHLCDIRLBL
P1224L1125CUSG	RPT1224X1125SG	ECLCHINGE	ECSIELATCH	ECTS2	ECBONDSCRW	ECADHLCDIRLBL
P1224L1200CU	RPT1224X1200	ECLCHINGE	ECSIELATCH	ECTS2	ECBONDSCRW	ECADHLCDIRLBL
P1624B1100CU	RPT1624X1100	ECLCHINGE	ECSIELATCH	ECTS2	ECBONDSCRW	ECADHLCDIRLBL
P1624B1100CUW	RPT1624X1100W	ECLCHINGE	ECSIELATCH	ECTS2W	ECBONDSCRW	ECADHLCDIRLBL
P1624L1125CU	RPT1624X1125	ECLCHINGE	ECSIELATCH	ECTS2	ECBONDSCRW	ECADHLCDIRLBL
P1624L1125CUSG	RPT1624X1125SG	ECLCHINGE	ECSIELATCH	ECTS2	ECBONDSCRW	ECADHLCDIRLBL
P2020B1100CU	RPT2020X1100	ECLCHINGE	ECSIELATCH	ECTS2	ECBONDSCRW	ECADHLCDIRLBL
P2020L1125CU	RPT2020X1125	ECLCHINGE	ECSIELATCH	ECTS2	ECBONDSCRW	ECADHLCDIRLBL
P2020L1125CUW	RPT2020X1125W	ECLCHINGE	ECSIELATCH	ECTS2W	ECBONDSCRW	ECADHLCDIRLBL
P2024B1100CU	RPT2024X1100	ECLCHINGE	ECSIELATCH	ECTS2	ECBONDSCRW	ECADHLCDIRLBL
P2024L1125CU	RPT2024X1125	ECLCHINGE	ECSIELATCH	ECTS2	ECBONDSCRW	ECADHLCDIRLBL
P2030B1150CU	RPT2030X1150	ECLCHINGE	ECSIELATCH	ECTS2	ECBONDSCRW	ECADHLCDIRLBL
P2030L1125CUSG	RPT2030X1125SG	ECLCHINGE	ECSIELATCH	ECTS2	ECBONDSCRW	ECADHLCDIRLBL
P2030L1150CU	RPT2030X1150	ECLCHINGE	ECSIELATCH	ECTS2	ECBONDSCRW	ECADHLCDIRLBL
P2030L1150CUSG	RPT2030X1150SG	ECLCHINGE	ECSIELATCH	ECTS2	ECBONDSCRW	ECADHLCDIRLBL
P2040B1200CU	RPT2040X1200	ECLCHINGE	ECSIELATCH	ECTS2	ECBONDSCRW	ECADHLCDIRLBL
P2040L1200CU	RPT2040X1200	ECLCHINGE	ECSIELATCH	ECTS2	ECBONDSCRW	ECADHLCDIRLBL
P2424B1100CU	RPT2424X1100	ECLCHINGE	ECSIELATCH	ECTS2	ECBONDSCRW	ECADHLCDIRLBL
P2430L1125CUSG	RPT2430X1125SG	ECLCHINGE	ECSIELATCH	ECTS2	ECBONDSCRW	ECADHLCDIRLBL
P2440L1125CU	RPT2440X1125	ECLCHINGE	ECSIELATCH	ECTS2	ECBONDSCRW	ECADHLCDIRLBL
P2440L1125CUW	RPT2440X1125W	ECLCHINGE	ECSIELATCH	ECTS2W	ECBONDSCRW	ECADHLCDIRLBL
P2440L1200CU	RPT2440X1200	ECLCHINGE	ECSIELATCH	ECTS2	ECBONDSCRW	ECADHLCDIRLBL
P3030B1100CU	RPT3030X1100	ECLCHINGE	ECSIELATCH	ECTS2	ECBONDSCRW	ECADHLCDIRLBL
P3030B1125CU	RPT3030X1125	ECLCHINGE	ECSIELATCH	ECTS2	ECBONDSCRW	ECADHLCDIRLBL
P3030B1125CUW	RPT3030X1125W	ECLCHINGE	ECSIELATCH	ECTS2W	ECBONDSCRW	ECADHLCDIRLBL
P3030B1150CU	RPT3030X1150	ECLCHINGE	ECSIELATCH	ECTS2	ECBONDSCRW	ECADHLCDIRLBL
P3030L1200CU	RPT3030X1200	ECLCHINGE	ECSIELATCH	ECTS2	ECBONDSCRW	ECADHLCDIRLBL
P3040B1200	RPT3040X1200	ECLCHINGE	ECSIELATCH	ECTS2	ECBONDSCRW	ECADHLCDIRLBL
P3040B1200CU	RPT3040X1200	ECLCHINGE	ECSIELATCH	ECTS2	ECBONDSCRW	ECADHLCDIRLBL
P3040B1200W	RPT3040X1200W	ECLCHINGE	ECSIELATCH	ECTS2W	ECBONDSCRW	ECADHLCDIRLBL
P3040B1200W	RPT3040X1200W	ECLCHINGE	ECSIELATCH	ECTS2W	ECBONDSCRW	ECADHLCDIRLBL
P3040L1125CU	RPT3040X1125	ECLCHINGE	ECSIELATCH	ECTS2	ECBONDSCRW	ECADHLCDIRLBL
P3040L1125CUW	RPT3040X1125W	ECLCHINGE	ECSIELATCH	ECTS2W	ECBONDSCRW	ECADHLCDIRLBL
P3040L1200	RPT3040X1200	ECLCHINGE	ECSIELATCH	ECTS2	ECBONDSCRW	ECADHLCDIRLBL
P3040L1200CU	RPT3040X1200	ECLCHINGE	ECSIELATCH	ECTS2	ECBONDSCRW	ECADHLCDIRLBL
P3040L1200CUSG	RPT3040X1200SG	ECLCHINGE	ECSIELATCH	ECTS2	ECBONDSCRW	ECADHLCDIRLBL
P3040L1200CUW	RPT3040X1200W	ECLCHINGE	ECSIELATCH	ECTS2W	ECBONDSCRW	ECADHLCDIRLBL
P3040L1200SG	RPT3040X1200SG	ECLCHINGE	ECSIELATCH	ECTS2	ECBONDSCRW	ECADHLCDIRLBL
P3040L1200W	RPT3040X1200W	ECLCHINGE	ECSIELATCH	ECTS2W	ECBONDSCRW	ECADHLCDIRLBL
P3054L1200CU	RPT3054X1200	ECLCHINGE	ECSIELATCH	ECTS2	ECBONDSCRW	ECADHLCDIRLBL

Replacement Part Grid

1 Phase PL Series (cont.)

Load Center Catalog Number	Replacement Trim Kit Catalog Number	Hinge Catalog Number	Door Latch Catalog Number	Trim Screw Catalog Number	Bond Screw Catalog Number	Directory Label Catalog Number
P4040B1200	RPT4040X1200	ECLCHINGE	ECSIELATCH	ECTS2	ECBONDSCRW	ECADHLCDIRLBL
P4040B1200CU	RPT4040X1200	ECLCHINGE	ECSIELATCH	ECTS2	ECBONDSCRW	ECADHLCDIRLBL
P4040B1200CUSG	RPT4040X1200SG	ECLCHINGE	ECSIELATCH	ECTS2	ECBONDSCRW	ECADHLCDIRLBL
P4040B1200CUW	RPT4040X1200W	ECLCHINGE	ECSIELATCH	ECTS2W	ECBONDSCRW	ECADHLCDIRLBL
P4040B1200W	RPT4040X1200W	ECLCHINGE	ECSIELATCH	ECTS2W	ECBONDSCRW	ECADHLCDIRLBL
P4040L1125CU	RPT4040X1125	ECLCHINGE	ECSIELATCH	ECTS2	ECBONDSCRW	ECADHLCDIRLBL
P4040L1125CUW	RPT4040X1125W	ECLCHINGE	ECSIELATCH	ECTS2W	ECBONDSCRW	ECADHLCDIRLBL
P4040L1200	RPT4040X1200	ECLCHINGE	ECSIELATCH	ECTS2	ECBONDSCRW	ECADHLCDIRLBL
P4040L1200CU	RPT4040X1200	ECLCHINGE	ECSIELATCH	ECTS2	ECBONDSCRW	ECADHLCDIRLBL
P4040L1200CUSG	RPT4040X1200SG	ECLCHINGE	ECSIELATCH	ECTS2	ECBONDSCRW	ECADHLCDIRLBL
P4040L1200CUW	RPT4040X1200W	ECLCHINGE	ECSIELATCH	ECTS2W	ECBONDSCRW	ECADHLCDIRLBL
P4040L1200SG	RPT4040X1200SG	ECLCHINGE	ECSIELATCH	ECTS2	ECBONDSCRW	ECADHLCDIRLBL
P4260B1225CU	RPT4260X1225	ECLCHINGE	ECSIELATCH	ECTS2	ECBONDSCRW	ECADHLCDIRLBL
P4260B1225CUW	RPT4260X1225W	ECLCHINGE	ECSIELATCH	ECTS2W	ECBONDSCRW	ECADHLCDIRLBL
P4260L1225CU	RPT4260X1225	ECLCHINGE	ECSIELATCH	ECTS2	ECBONDSCRW	ECADHLCDIRLBL
P4260L1225CUSG	RPT4260X1225SG	ECLCHINGE	ECSIELATCH	ECTS2	ECBONDSCRW	ECADHLCDIRLBL
P4260L1225CUW	RPT4260X1225W	ECLCHINGE	ECSIELATCH	ECTS2W	ECBONDSCRW	ECADHLCDIRLBL
P5470B1200CU	RPT5470X1200	ECLCHINGE	ECSIELATCH	ECTS2	ECBONDSCRW	ECADHLCDIRLBL
P5470B1200CUW	RPT5470X1200W	ECLCHINGE	ECSIELATCH	ECTS2W	ECBONDSCRW	ECADHLCDIRLBL
P5470B1225CU	RPT5470X1225	ECLCHINGE	ECSIELATCH	ECTS2	ECBONDSCRW	ECADHLCDIRLBL
P5470L1225CU	RPT5470X1225	ECLCHINGE	ECSIELATCH	ECTS2	ECBONDSCRW	ECADHLCDIRLBL

Replacement Part Grid

1 Phase ES Series

Load Center Catalog Number	Replacement Trim Kit Catalog Number	Hinge Catalog Number	Door Latch Catalog Number	Trim Screw Catalog Number	Bond Screw Catalog Number	Directory Label Catalog Number
S1212L1125	RST1212L1125	ECLCHINGE	ECSIELATCH	ECTS2	ECBONDSCRW	ECADHLCDIRLBL
S1224B1100	RST1224B1100	ECLCHINGE	ECSIELATCH	ECTS2	ECBONDSCRW	ECADHLCDIRLBL
S1224L1125	RST1224L1125	ECLCHINGE	ECSIELATCH	ECTS2	ECBONDSCRW	ECADHLCDIRLBL
S1224L1200	RST1224L1200	ECLCHINGE	ECSIELATCH	ECTS2	ECBONDSCRW	ECADHLCDIRLBL
S1624B1100	RST1624B1100	ECLCHINGE	ECSIELATCH	ECTS2	ECBONDSCRW	ECADHLCDIRLBL
S1624B1100W	RST1624B1100W	ECLCHINGE	ECSIELATCH	ECTS2W	ECBONDSCRW	ECADHLCDIRLBL
S1624B1100W	RST1624B1100W	ECLCHINGE	ECSIELATCH	ECTS2W	ECBONDSCRW	ECADHLCDIRLBL
S1624B1125	RST1624B1125	ECLCHINGE	ECSIELATCH	ECTS2	ECBONDSCRW	ECADHLCDIRLBL
S1624L1125	RST1624L1125	ECLCHINGE	ECSIELATCH	ECTS2	ECBONDSCRW	ECADHLCDIRLBL
S1630B1150	RST1630B1150	ECLCHINGE	ECSIELATCH	ECTS2	ECBONDSCRW	ECADHLCDIRLBL
S1632B1200	RST1632B1200	ECLCHINGE	ECSIELATCH	ECTS2	ECBONDSCRW	ECADHLCDIRLBL
S2020B1100	RST2020B1100	ECLCHINGE	ECSIELATCH	ECTS2	ECBONDSCRW	ECADHLCDIRLBL
S2020B1100P	RST2020B1100	ECLCHINGE	ECSIELATCH	ECTS2	ECBONDSCRW	ECADHLCDIRLBL
S2020L1125	RST2020L1125	ECLCHINGE	ECSIELATCH	ECTS2	ECBONDSCRW	ECADHLCDIRLBL
S2020L1125G	RST2020L1125	ECLCHINGE	ECSIELATCH	ECTS2	ECBONDSCRW	ECADHLCDIRLBL
S2020L1125GW	RST2020L1125W	ECLCHINGE	ECSIELATCH	ECTS2W	ECBONDSCRW	ECADHLCDIRLBL
S2020L1125W	RST2020L1125W	ECLCHINGE	ECSIELATCH	ECTS2W	ECBONDSCRW	ECADHLCDIRLBL
S2020L1125W	RST2020L1125W	ECLCHINGE	ECSIELATCH	ECTS2W	ECBONDSCRW	ECADHLCDIRLBL
S2024B1100	RST2024B1100	ECLCHINGE	ECSIELATCH	ECTS2	ECBONDSCRW	ECADHLCDIRLBL
S2024L1125	RST2024L1125	ECLCHINGE	ECSIELATCH	ECTS2	ECBONDSCRW	ECADHLCDIRLBL
S2024L1125G	RST2024L1125	ECLCHINGE	ECSIELATCH	ECTS2	ECBONDSCRW	ECADHLCDIRLBL
S2030B1150	RST2030B1150	ECLCHINGE	ECSIELATCH	ECTS2	ECBONDSCRW	ECADHLCDIRLBL
S2030L1125SG	RST2030L1125SG	ECLCHINGE	ECSIELATCH	ECTS2	ECBONDSCRW	ECADHLCDIRLBL
S2030L1150	RST2030L1150	ECLCHINGE	ECSIELATCH	ECTS2	ECBONDSCRW	ECADHLCDIRLBL
S2030L1150W	RST2030L1150W	ECLCHINGE	ECSIELATCH	ECTS2W	ECBONDSCRW	ECADHLCDIRLBL
S2040B1200	RST2040B1200	ECLCHINGE	ECSIELATCH	ECTS2	ECBONDSCRW	ECADHLCDIRLBL
S2040L1200	RST2040L1200	ECLCHINGE	ECSIELATCH	ECTS2	ECBONDSCRW	ECADHLCDIRLBL
S2424B1125	RST2424X1125	ECLCHINGE	ECSIELATCH	ECTS2	ECBONDSCRW	ECADHLCDIRLBL
S2424B1125W	RST2424X1125W	ECLCHINGE	ECSIELATCH	ECTS2W	ECBONDSCRW	ECADHLCDIRLBL
S2424C1125	RST2424C1125	ECLCHINGE	ECSIELATCH	ECTS2	ECBONDSCRW	ECADHLCDIRLBL
S2424L1125	RST2424L1125	ECLCHINGE	ECSIELATCH	ECTS2	ECBONDSCRW	ECADHLCDIRLBL
S2424L1125G	RST2424L1125	ECLCHINGE	ECSIELATCH	ECTS2	ECBONDSCRW	ECADHLCDIRLBL
S2424L1125GW	RST2424L1125W	ECLCHINGE	ECSIELATCH	ECTS2W	ECBONDSCRW	ECADHLCDIRLBL
S2424L1125W	RST2424L1125W	ECLCHINGE	ECSIELATCH	ECTS2W	ECBONDSCRW	ECADHLCDIRLBL
S2424L1125W	RST2424L1125W	ECLCHINGE	ECSIELATCH	ECTS2W	ECBONDSCRW	ECADHLCDIRLBL
S2430B1150	RST2430B1150	ECLCHINGE	ECSIELATCH	ECTS2	ECBONDSCRW	ECADHLCDIRLBL
S2440B1200	RST2440X1200	ECLCHINGE	ECSIELATCH	ECTS2	ECBONDSCRW	ECADHLCDIRLBL
S2440L1125	RST2440L1125	ECLCHINGE	ECSIELATCH	ECTS2	ECBONDSCRW	ECADHLCDIRLBL
S2440L1200	RST2440L1200	ECLCHINGE	ECSIELATCH	ECTS2	ECBONDSCRW	ECADHLCDIRLBL
S3030B1100	RST3030B1100	ECLCHINGE	ECSIELATCH	ECTS2	ECBONDSCRW	ECADHLCDIRLBL
S3030B1100W	RST3030B1100W	ECLCHINGE	ECSIELATCH	ECTS2W	ECBONDSCRW	ECADHLCDIRLBL
S3030B1125	RST3030B1125	ECLCHINGE	ECSIELATCH	ECTS2	ECBONDSCRW	ECADHLCDIRLBL
S3030B1125W	RST3030B1125W	ECLCHINGE	ECSIELATCH	ECTS2W	ECBONDSCRW	ECADHLCDIRLBL
S3030B1150	RST3030B1150	ECLCHINGE	ECSIELATCH	ECTS2	ECBONDSCRW	ECADHLCDIRLBL
S3030B1150SG	RST3030B1150SG	ECLCHINGE	ECSIELATCH	ECTS2	ECBONDSCRW	ECADHLCDIRLBL
S3030B1150W	RST3030B1150W	ECLCHINGE	ECSIELATCH	ECTS2W	ECBONDSCRW	ECADHLCDIRLBL

Replacement Part Grid

1 Phase ES Series (cont.)

Load Center Catalog Number	Replacement Trim Kit Catalog Number	Hinge Catalog Number	Door Latch Catalog Number	Trim Screw Catalog Number	Bond Screw Catalog Number	Directory Label Catalog Number
S3030L1200	RST3030L1200	ECLCHINGE	ECSIELATCH	ECTS2	ECBONDSCRW	ECADHLCDIRLBL
S3030L1200W	RST3030L1200W	ECLCHINGE	ECSIELATCH	ECTS2W	ECBONDSCRW	ECADHLCDIRLBL
S3030L1200W	RST3030L1200W	ECLCHINGE	ECSIELATCH	ECTS2W	ECBONDSCRW	ECADHLCDIRLBL
S3040B1125	RST3040B1125	ECLCHINGE	ECSIELATCH	ECTS2	ECBONDSCRW	ECADHLCDIRLBL
S3040B1150	RST3040B1150	ECLCHINGE	ECSIELATCH	ECTS2	ECBONDSCRW	ECADHLCDIRLBL
S3040B1200	RST3040B1200	ECLCHINGE	ECSIELATCH	ECTS2	ECBONDSCRW	ECADHLCDIRLBL
S3040B1200P	RST3040B1200	ECLCHINGE	ECSIELATCH	ECTS2	ECBONDSCRW	ECADHLCDIRLBL
S3040B1200W	RST3040B1200W	ECLCHINGE	ECSIELATCH	ECTS2W	ECBONDSCRW	ECADHLCDIRLBL
S3040C1200	RST3040C1200	ECLCHINGE	ECSIELATCH	ECTS2	ECBONDSCRW	ECADHLCDIRLBL
S3040L1125	RST3040L1125	ECLCHINGE	ECSIELATCH	ECTS2	ECBONDSCRW	ECADHLCDIRLBL
S3040L1125G	RST3040L1125	ECLCHINGE	ECSIELATCH	ECTS2	ECBONDSCRW	ECADHLCDIRLBL
S3040L1125GW	RST3040L1125W	ECLCHINGE	ECSIELATCH	ECTS2W	ECBONDSCRW	ECADHLCDIRLBL
S3040L1125W	RST3040L1125W	ECLCHINGE	ECSIELATCH	ECTS2W	ECBONDSCRW	ECADHLCDIRLBL
S3040L1125W	RST3040L1125W	ECLCHINGE	ECSIELATCH	ECTS2W	ECBONDSCRW	ECADHLCDIRLBL
S3040L1200	RST3040L1200	ECLCHINGE	ECSIELATCH	ECTS2	ECBONDSCRW	ECADHLCDIRLBL
S3040L1200P	RST3040L1200	ECLCHINGE	ECSIELATCH	ECTS2	ECBONDSCRW	ECADHLCDIRLBL
S3040L1200W	RST3040L1200W	ECLCHINGE	ECSIELATCH	ECTS2W	ECBONDSCRW	ECADHLCDIRLBL
S3054B1200P	RST3054B1200	ECLCHINGE	ECSIELATCH	ECTS2	ECBONDSCRW	ECADHLCDIRLBL
S3054L1200	RST3054L1200	ECLCHINGE	ECSIELATCH	ECTS2	ECBONDSCRW	ECADHLCDIRLBL
S4040B1200	RST4040B1200	ECLCHINGE	ECSIELATCH	ECTS2	ECBONDSCRW	ECADHLCDIRLBL
S4040B1200P	RST4040B1200	ECLCHINGE	ECSIELATCH	ECTS2	ECBONDSCRW	ECADHLCDIRLBL
S4040B1200SG	RST4040B1200SG	ECLCHINGE	ECSIELATCH	ECTS2	ECBONDSCRW	ECADHLCDIRLBL
S4040B1200W	RST4040B1200W	ECLCHINGE	ECSIELATCH	ECTS2W	ECBONDSCRW	ECADHLCDIRLBL
S4040B1200W	RST4040B1200W	ECLCHINGE	ECSIELATCH	ECTS2W	ECBONDSCRW	ECADHLCDIRLBL
S4040C1200	RST4040C1200	ECLCHINGE	ECSIELATCH	ECTS2	ECBONDSCRW	ECADHLCDIRLBL
S4040L1125	RST4040L1125	ECLCHINGE	ECSIELATCH	ECTS2	ECBONDSCRW	ECADHLCDIRLBL
S4040L1200	RST4040L1200	ECLCHINGE	ECSIELATCH	ECTS2	ECBONDSCRW	ECADHLCDIRLBL
S4040L1200W	RST4040L1200W	ECLCHINGE	ECSIELATCH	ECTS2W	ECBONDSCRW	ECADHLCDIRLBL
S4040L1200W	RST4040L1200W	ECLCHINGE	ECSIELATCH	ECTS2W	ECBONDSCRW	ECADHLCDIRLBL
S4260B1225	RST4260B1225	ECLCHINGE	ECSIELATCH	ECTS2	ECBONDSCRW	ECADHLCDIRLBL
S4260L1225	RST4260L1225	ECLCHINGE	ECSIELATCH	ECTS2	ECBONDSCRW	ECADHLCDIRLBL
S5470B1200	RST5470B1200	ECLCHINGE	ECSIELATCH	ECTS2	ECBONDSCRW	ECADHLCDIRLBL
S5470B1225	RST5470B1225	ECLCHINGE	ECSIELATCH	ECTS2	ECBONDSCRW	ECADHLCDIRLBL
S5470L1225	RST5470L1225	ECLCHINGE	ECSIELATCH	ECTS2	ECBONDSCRW	ECADHLCDIRLBL

Replacement Part Grid

3 Phase PL & ES Series

Load Center Catalog Number	Replacement Trim Kit Catalog Number	Hinge Catalog Number	Door Latch Catalog Number	Trim Screw Catalog Number	Bond Screw Catalog Number	Directory Label Catalog Number
P1224B3100CU	RPT1224B3100	ECLCHINGE	ECSIELATCH	ECTS2	ECBONDSCRW	ECADHLCDIRLBL
P1224L3125CU	RPT1224L3125	ECLCHINGE	ECSIELATCH	ECTS2	ECBONDSCRW	ECADHLCDIRLBL
P2442B3150CU	RPT2442X3150	ECLCHINGE	ECSIELATCH	ECTS2	ECBONDSCRW	ECADHLCDIRLBL
P2442L3200CU	RPT2442X3200	ECLCHINGE	ECSIELATCH	ECTS2	ECBONDSCRW	ECADHLCDIRLBL
P3030B3125CU	RPT3030X2125	ECLCHINGE	ECSIELATCH	ECTS2	ECBONDSCRW	ECADHLCDIRLBL
P3042B3100CU	RPT3042B3100	ECLCHINGE	ECSIELATCH	ECTS2	ECBONDSCRW	ECADHLCDIRLBL
P3054B3200CU	RPT3054X3200	ECLCHINGE	ECSIELATCH	ECTS2	ECBONDSCRW	ECADHLCDIRLBL
P3054L3200CU	RPT3054X3200	ECLCHINGE	ECSIELATCH	ECTS2	ECBONDSCRW	ECADHLCDIRLBL
P4242B3150CU	RPT4242X3150	ECLCHINGE	ECSIELATCH	ECTS2	ECBONDSCRW	ECADHLCDIRLBL
P4260B3200CU	RPT4260X3200	ECLCHINGE	ECSIELATCH	ECTS2	ECBONDSCRW	ECADHLCDIRLBL
P4260B3200CUW	RPT5470X1200W	ECLCHINGE	ECSIELATCH	ECTS2W	ECBONDSCRW	ECADHLCDIRLBL
P4260B3225CU	RPT4260X3225	ECLCHINGE	ECSIELATCH	ECTS2	ECBONDSCRW	ECADHLCDIRLBL
P4260B3225TCU	RPT4260B3225T	ECLCHINGE	ECSIELATCH	ECTS2	ECBONDSCRW	ECADHLCDIRLBL
P4260L3225CU	RPT4260X3225	ECLCHINGE	ECSIELATCH	ECTS2	ECBONDSCRW	ECADHLCDIRLBL
P5470B3225CU	RPT5470X3225	ECLCHINGE	ECSIELATCH	ECTS2	ECBONDSCRW	ECADHLCDIRLBL
P5470L3225CU	RPT5470X3225	ECLCHINGE	ECSIELATCH	ECTS2	ECBONDSCRW	ECADHLCDIRLBL
S1224B3100	RST1224B3100	ECLCHINGE	ECSIELATCH	ECTS2	ECBONDSCRW	ECADHLCDIRLBL
S1224L3125	RST1224L3125	ECLCHINGE	ECSIELATCH	ECTS2	ECBONDSCRW	ECADHLCDIRLBL
S1224L3200	RST1224L3200	ECLCHINGE	ECSIELATCH	ECTS2	ECBONDSCRW	ECADHLCDIRLBL
S1836L3150	RST1836L3150	ECLCHINGE	ECSIELATCH	ECTS2	ECBONDSCRW	ECADHLCDIRLBL
S2442B3150	RST2442B3150	ECLCHINGE	ECSIELATCH	ECTS2	ECBONDSCRW	ECADHLCDIRLBL
S2442L3150	RST2442L3150	ECLCHINGE	ECSIELATCH	ECTS2	ECBONDSCRW	ECADHLCDIRLBL
S2442L3200	RST2442L3200	ECLCHINGE	ECSIELATCH	ECTS2	ECBONDSCRW	ECADHLCDIRLBL
S3030B3100	RST3030B3100	ECLCHINGE	ECSIELATCH	ECTS2	ECBONDSCRW	ECADHLCDIRLBL
S3042B3100	RST3042B3100	ECLCHINGE	ECSIELATCH	ECTS2	ECBONDSCRW	ECADHLCDIRLBL
S3054B3200	RST3054B3200	ECLCHINGE	ECSIELATCH	ECTS2	ECBONDSCRW	ECADHLCDIRLBL
S3054L3200	RST3054L3200	ECLCHINGE	ECSIELATCH	ECTS2	ECBONDSCRW	ECADHLCDIRLBL
S3054L3200W	RST3054L3200W	ECLCHINGE	ECSIELATCH	ECTS2W	ECBONDSCRW	ECADHLCDIRLBL
S4242B3150	RST4242B3150	ECLCHINGE	ECSIELATCH	ECTS2	ECBONDSCRW	ECADHLCDIRLBL
S4242B3225	RST4242B3225	ECLCHINGE	ECSIELATCH	ECTS2	ECBONDSCRW	ECADHLCDIRLBL
S4260B3200	RST4260B3200	ECLCHINGE	ECSIELATCH	ECTS2	ECBONDSCRW	ECADHLCDIRLBL
S4260L3225	RST4260L3225	ECLCHINGE	ECSIELATCH	ECTS2	ECBONDSCRW	ECADHLCDIRLBL
S4260L3225W	RST4260L3225W	ECLCHINGE	ECSIELATCH	ECTS2W	ECBONDSCRW	ECADHLCDIRLBL
S5470L3225	RST5470L3225	ECLCHINGE	ECSIELATCH	ECTS2	ECBONDSCRW	ECADHLCDIRLBL
S5470L3225W	RST5470L3225W	ECLCHINGE	ECSIELATCH	ECTS2W	ECBONDSCRW	ECADHLCDIRLBL

Published by
Siemens 2019

Siemens Industry, Inc.
5400 Triangle Parkway
Norcross, GA 30092

Siemens Technical Support: 1-800-333-7421
info.us@siemens.com

Order No.RPBR-LCARP-0119

Printed in USA-CP
All Rights Reserved
© 2019, Siemens Industry, Inc.

The technical data presented in this document is based on an actual case or on as-designed parameters, and therefore should not be relied upon for any specific application and does not constitute a performance guarantee for any projects. Actual results are dependent on variable conditions. Accordingly, Siemens does not make representations, warranties, or assurances as to the accuracy, currency or completeness of the content contained herein. If requested, we will provide specific technical data or specifications with respect to any customer's particular applications. Our company is constantly involved in engineering and development. For that reason, we reserve the right to modify, at any time, the technology and product specifications contained herein.