Safety and Disconnect Switches



General Duty Switch

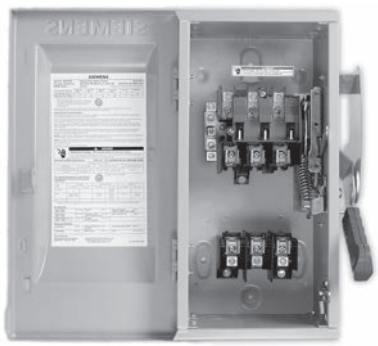

Heavy Duty Switch



contents

Safety Switch Guide Form Specifications	18/3
Feature Comparison	18/4
Enclosure Types	18/5
Catalog Numbering System	18/6
Wire Ranges	18/7
Non-Fusible Safety Switch AIC Ratings When Protected by a 3VA Circuit Breaker	18/8
General Duty Safety Switches	
General Duty Switches—Features	18/10
240V Fusible—Selection	18/11
240V Non-Fusible—Selection	18/12
Heavy Duty Safety Switches	
Heavy Duty Switches—Features	18/13
240V Fusible—Selection	18/14
600V Fusible—Selection	18/15
600V Non-Fusible—Selection	18/16
Type 4/4X and 12 with Viewing Window—Selection	18/27
Special Applications Safety Switches	
Elevator Control Switches in NEMA Type 1, 3R, and 12 Enclosures	18/17 – 18/18
Heavy-Duty Shunt Trip Safety Switches	18/19 – 18/20
Heavy-Duty Switches with Surge Protection	18/21 – 18/22
4-Pole and 6-Pole—Selection	18/23
Interlocked Receptacle—Selection	18/24
Non-Metallic—Selection	18/25
Enclosed Solar PV Disconnects	18/26
Double-Throw Switches—Selection	18/27 – 18/28
Accessories—General and Heavy Duty Switches	
Class R Fuse Clips, Class J Fusing, Class T Fuse Adapter Kits	18/29
Neutral Kits, 200% Neutral Kits, Fuse Puller Kits	18/29
Auxiliary Contacts, Copper Lug Kits	18/31
Equipment Ground Kits, Isolated Ground Kits	18/31
Interchangeable Hubs	18/32
Compression Lug, Neutral Barrier Kits, Lugs and Wire Ranges	18/32
Multiple Padlocks, Kirk-Key Interlocks	18/32
Dimensions and Weights	
General and Heavy Duty Switches	18/33 – 18/36
Type 1 and 3R Knockout Diagrams	18/38 – 18/39
Non-Metallic and Receptacle Switch Dimensions	18/40
4-Pole and 6-Pole Switch Dimensions	18/41
Double-Throw Switches Dimensions	18/42
VBII Safety Switch Replacement Parts	18/43
Wiring Diagrams	18/44 – 18/53

Safety and Disconnect Switches



CFS Compact Fusible Switch



VBFS361

contents

3LD Switch Disconnectors

Quick selection guides	18/54 – 18/55
3LD3 main control and EMERGENCY_STOP switches UL508	18/56 – 18/65
3LD2 main control and EMERGENCY_STOP switches UL508	18/66 – 18/85
3LD5 main control and EMERGENCY_STOP switches UL489	18/86 – 18/95
Enclosed Rotary Disconnects	18/96 – 18/97

Type VBII (30-600A)

Features and Ordering Information	18/98
Switch and Handle Selection	18/99
Accessories	18/100 – 18/101
Dimensions and Lug Wire Ranges	18/102

Type MCS (30-200A)

Switches, Fuse, and No Fuse Kit—Selection	18/103
Handle Operators and Accessories	18/104

Type CFS Compact Fusible Switches

General information and catalog numbering system	18/105
Features and ordering information	18/106
Switch, shaft and handle selection	18/107
Selection and accessories	18/108
Technical Characteristics	18/109

Type CNFS Compact Non-Fusible Switches

General information and catalog numbering system	18/110
Features and ordering information	18/111
Switch, shaft and handle selection	18/112
Additional accessories	18/113

	General Duty	Heavy Duty	Double Throw
Application	General Duty Switches are intended for applications where reliable performance and continuity of service are needed, but where duty requirements are not severe and usual service conditions prevail. (These switches are intended for use primarily with supply circuits rated 240V AC or less where the available fault current is less than 100,000A when used with Class R or T fuses or 10,000A max. when used with Class H fuses.)	Heavy Duty Switches are intended for use in applications where: 1. Rugged construction, reliable performance, continuity of service and ease of maintenance are emphasized, or 2. Available fault currents higher than 10,000A are likely to be encountered, such as in manufacturing plants, mass production industries, and commercial, institution-al and other large buildings served by network systems or transformers of higher capacities. 3. System voltage is 600V AC or DC Max. 4. A Type 12 or 4 / 4X enclosure is required.	Double throw switches are intended to transfer loads from one power source to another. All 2 & 3 pole double throw switches are suitable for use as service equipment. All are UL Listed. Switches are rated for use on systems with an available fault current of up to 10,000 AIC when protected with Class H fuses or either 100,000 or 200,000 AIC when protected with Class R, J or Class T fuses. They can also be used to connect a single source of power to either of two loads, In this application it is necessary to field modify fusible switches so that the fuses are on the load side of the switching mechanism.
Short Circuit Withstand Ratings	Suitable for use on systems capable of delivering not more than 100,000 RMS symmetrical amperes of fault current as follows: Sw. Rating / AIC Rating / Protective Device① 30-600A / 10,000 / Circuit Breaker 30-600A / 10,000 / Class H Fuse 30-600A / 100,000 / Class R Fuse 100-600A / 100,000 / Class J or T Fuse	Suitable for use on systems capable of delivering not more than 200,000 RMS symmetrical amperes of fault current as follows: Sw. Rating & Tpye / AIC Rating / Protective Device① All Heavy Duty & DT / 10,000 / Circuit Breaker 30-600A HD & DT / 10,000 / Class H Fuse 60A Compact HD / 100,000 / Class R, J or T Fuse GD & 4P DT / 100,000 / Class R, J or T Fuse 30-600A HD / 200,000 / Class R, J or T Fuse 30-600A DTF & DTNF DT② / 200,000 / Class R, J or T Fuse 800 & 1200A HD & DT② / 200,000 / Class L or T Fuse	
Fuses	Fusible switches will accept the following UL class fuses: 30-600A "GF" Class H & K, Class R with kit 100-600A "GF" Class J-move base 100-200 "GF" Class T with kit 400-600A "GF" Class T with kit	Fusible switches will accept the following UL class fuses: 30-600A "HF" Class H & K, Class R with kit 30-400A, 600V "HF" Class J-move base 100-600A, 240V "HF" Class J-move base 100-200A "HF" Class T with kit 400-600A "HF" Class T with kit 800-1200A "HF" Class L, Class T③	Fusible switches will accept the following UL class fuses: 30-200A "DT" & "F" Class H & K, Class R with kit 30 & 60A 600V "DT" Class J-move base 100-200A "DT" Class J-move base, Class T with kit 400-600A "DT" Class J-standard, Class T-move bases 400A 240v "F" Class H-standard 400A, 600V & 600A "F" Class T-Standard
Cover Interlocks	Voidable – cover interlocks on switches prevent the switch door from being opened when in the "ON" position. No cover interlock on 30-60A GD.	Voidable dual cover interlocks standard on all heavy duty switches. Prevents cover from being opened when switch is in the "ON" position and prevents switch from being turned "ON" when door is opened.	Dual cover interlocks standard on all double throw switches. Prevents cover from being opened when switch is in the "ON" position and prevents switch from being turned "ON" when door is opened.
Underwriters' Laboratories, Inc.	Listed by UL under file #E4776 as enclosed switches and also suitable for use as service equipment (where applicable). UL98 Enclosed and Deadfront Switches.		
NEMA Specifications	Meet NEMA standard KS-1-2001 for type GD switches.	Meet NEMA standard KS-1-2001 for type HD switches.	Meet NEMA standard KS-1-2001 type GD for "DTG" & type HD for "DT", "F" & "NF" switches.
Seismic Qualifications	30-1200A GD & all HD switches and "DT" type double throw switches have been tested and designed in accordance with the American Society of Civil Engineers (ASCE) 7-17 chapter 13 - Compliance Level SDS = 2.00 g (z/h = 1); 2.50 g (z/h=0)		
Groundable Neutral (All neutrals are bondable for service entrance use.)	Fusible switches have groundable neutral blocks factory installed. Non-fusible switches accept field addable neutrals.	All switches (both Fusible and Non-Fusible) are either supplied with factory installed neutrals or accept field addable neutrals.	All except 4 pole switches will accept field addable neutrals except that "DTG" 100 & 200A switches are also available with factory installed neutrals.
Padlocks	Padlockable cover latch. OFF padlock provisions on handle.	Padlockable cover latch and multiple OFF padlock provisions on handle.	Padlockable cover latch and multiple OFF padlock provisions on handle.
HP & Load Break Ratings	All General Duty, Heavy Duty and Double Throw Switches are both load break and horsepower rated.		

① The protective device can either be a fuse or circuit breaker protecting a non-fusible switch. The ampere rating of the protective device must not exceed the switch ampere rating.

② All 4 pole and fusible double switches with catalog numbers starting with "F" are rated 100,000 AIC max.

③ 800A switches do not require an adapter kit, bases can be relocated to accommodate class-T fuses. A class-T adapter kit is required available for 240V applications on 1200A switches.

Feature Comparison

General Duty	Heavy Duty	Double Throw	Features / Ratings
▪	▪	▪	30 thru 600 Amps
	▪	▪	800 and 1200 Amps
▪	▪	▪	240 Volt AC
	▪	▪	600 Volt AC
▪	▪	▪	250 Volt DC
	▪		600 Volt DC
▪	▪	▪	Double-break visible blade design (30-200A)
▪	▪	▪	Quick-make, quick-break switching action (excludes 30A GD)
	▪		Handle design for hook stick operation
▪	▪	▪	Padlockable cover latch
▪	▪	▪	Padlockable handle
▪		▪	Single voidable cover interlock (excludes 30-60A GD)
	▪	▪	Dual voidable cover interlock
▪	▪	▪	Type 1 enclosure
▪	▪	▪	Type 3R enclosure
	▪	▪	Type 12 enclosure
	▪	▪	Type 4 / 4X enclosures
▪	▪	▪	Generous wiring gutters that meet UL and NEC wire-bending space requirements
▪⑤	▪	▪	Lugs suitable for copper or aluminum at 60˚ or 75˚C
▪	▪	▪	CU/AL wire lugs that meet UL 486B requirements
	▪	▪	Suitable for field-convertible compression connectors
▪⑥	▪	▪	All plated copper current carrying parts (except lugs)
▪	▪	▪	Spring reinforced Fuse Clips (except 30-60A GD)②
	▪	▪	Clear pivoting line terminal shield
▪	▪	▪	Replacement parts (except 30-60A GD)
	▪		200% neutral available for purchase separately
▪⑦	▪①⑦	▪①⑦	Provisions for UL Class T, R and H Fuses
	▪	▪①	Provisions for UL Class J and L Fuses
	▪	▪	Metal nameplate
▪	▪	▪	Aux. switch kits (excludes 30-60A GD)
	▪③		Type 4X with stainless steel interior parts
▪④	▪		Rolled flange enclosure design (30-200A)
	▪	▪	Isolated ground kits

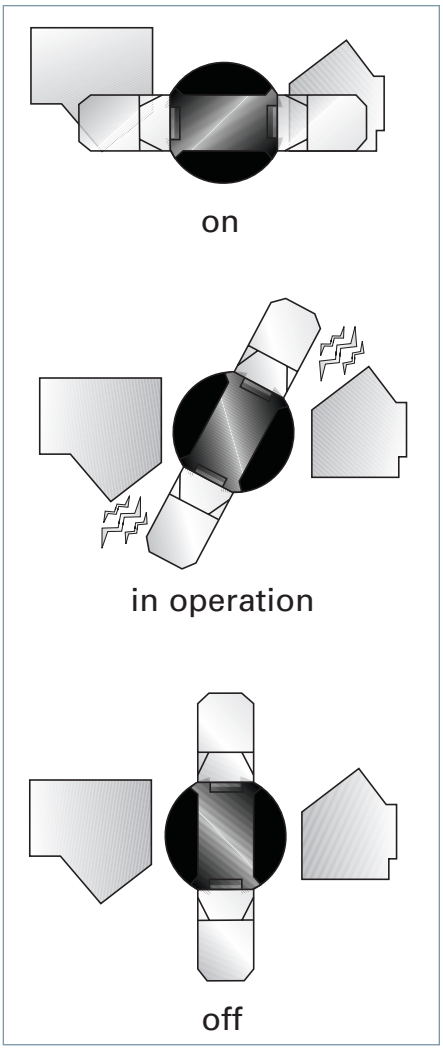

Double Break Switching Action

Like the time-proven Vacu-Break Design, the Siemens VBII double break switching action breaks the arc in two places in 30-600A ratings. This reduces heat generation and increases switching speed by doubling the breaking distance. The result is enhanced performance and increased longevity. We also provide the most visible blade design available today. Unlike conventional knife blade switches, the blades are self-aligning to ensure positive contact. In addition, they have no wear and friction point since the "electrical hinge" has been eliminated. The result is a very fast, positive and reliable switching action for even the most severe applications.

① 400, 600V & 600A fusible, double-throw switches accept only Class J or T fuses. Only 800 & 1200A HD switches will accept Class L fuses.
② 30-60A general duty switches have fuse clips constructed of spring type copper.
③ 30-200A Type VBII in stainless steel enclosures.
④ 100-200A.
⑤ 60A only suitable for Cu at 75°.
⑥ 200A general duty switches have aluminum neutral assemblies.
⑦ 100-600A GD & DT and 100-1200A HD switches will accept Class T fuses.

Enclosure Types

A **Type 1** enclosures are intended for indoor use primarily to provide protection against contact with the enclosed equipment in locations where unusual service conditions do not exist.

B **Type 3R** enclosures are intended for outdoor use primarily to provide a degree of protection against falling rain and sleet and must remain undamaged by the formation of ice on the enclosure. They are not intended to provide protection against conditions such as dust, internal condensation, or internal icing.

C **Type 4, 4X** enclosures are intended for indoor or outdoor use primarily to provide a degree of protection against windblown dust, rain, splashing water and hose-directed water. They are not intended to provide protection against conditions such as internal condensation or internal icing. Also meets 4X definition by providing a high degree of protection against corrosion. Siemens 30-200A stainless steel 4X switches are supplied stainless interior parts and hardware as standard.

D **Type 4** enclosures are intended for indoor or outdoor use primarily to provide a degree of protection against windblown dust, rain, splashing water and hose-directed water. They are not intended to provide protection against conditions such as internal condensation or internal icing.

E **Type 12**① enclosures are intended for indoor use primarily to provide a degree of protection against dust, falling dirt and dripping water. They are not intended to provide protection against conditions such as internal condensation.

Type 7/9 enclosures for use in hazardous locations. Use with molded case switches listed in Section 7.


A


B


C D


E

Load Break Ratings

All Siemens safety switches are load break rated. The load break rating is assigned by UL after the switching unit has successfully performed the following tests:

Switch Ampere Rating	Number of ON/OFF Operations per Minute	Number of Operations		
		With Current	Without Current	Total
30–100	6	6000	4000	10000
200	5	6000	2000	8000
400	4	1000	5000	6000
600	3	1000	4000	5000
800	2	500	3000	3500
1200	1	500	2000	2500

Maintenance

Refer to the latest edition of the following standards for switch maintenance.

- NEMA KS-3: Guidelines for Inspection and Preventive Maintenance of Switches Used in Commercial and Industrial Applications (available online at www.nema.org)
- NFPA 70B: Recommended Practice for Electrical Equipment Maintenance (available online at www.nfpa.org)

Horsepower Ratings

All Siemens safety switches, where appropriate, are horsepower rated. Ratings are approved by UL only after the switching unit has undergone testing to determine its acceptability which includes repeated interruption of the locked rotor current of the motor for which it is to be rated as follows:

Max HP Rating	Number of ON/OFF Operations per minute	Number of Cycles of Operation
100	6	50
500	1	10

① VBII Type 12 switches are also rated 3R & 3S for outdoor use. Type 3R is defined in B above. 3S rated enclosures provide a degree of protection against windblown dust and allow operation when the enclosure is ice laden.

Type VBII Safety Switch Catalog Numbering System

Product Overview

H	F	3	6	4	N	R	CU	A

Switch Type

L =	General Duty Quick Install④
G =	Gen. Duty
H =	Heavy Duty
DT =	Double Throw
DTG =	General Duty DT

Fused or Non-Fused

F =	Fused
NF =	Non-Fused

Number of Poles

2 =	2	**4** =	4
3 =	3	**6** =	6

Voltage

1 =	120V or 120/240V
2 =	240V
6 =	600V

Amperes

1 =	30A	**5** =	400A
2 =	60A	**6** =	600A
3 =	100A	**7** =	800A
4 =	200A	**8** =	1200A

Series Type

A =	All General Duty, 400A HD, 600A HD
Omit =	All HD except 400A, 600A

Special Applications With:

CH =	Crouse-Hinds Receptacle
H =	Height or Size Reduced
L =	Overzised enclosure / Plus Series
LL =	Max Series (30A GD)
PN =	Pyle-National Receptacle
PV =	Photovoltaic rated
PVPG =	Photovoltaic rated, Positive Ground
W =	Viewing Window

Enclosure Type

Omit =	Type 1, Indoor
R =	Type 3R, Outdoor
S =	Type 4 / 4X, Stainless Steel
SS =	Type 4 / 4X, 316 Grade Stainless Steel
X =	Type 4 / 4X, Non-Metallic
J =	Type 12, Industrial

With or Without Neutral

Omit =	Less Neutral
N =	With Neutral

Type VBII Accessories Catalog Numbering System

H	R	6	4	A

Switch Type

H =	Heavy Duty
G =	General Duty③

Accessory Type

A1 =	Auxiliary Switch 1/NO and 1/NC
A2 =	Auxiliary Switch 2/NO and 2/NC
A3 =	Auxiliary Switch Low Current
CL =	Compression Lug Barrier / Mounting Kit
CU =	Copper Lug③
G =	Ground Lug Kit
G2 =	Insulated Ground Lug Kit
J =	Class J Fuse Kit②
LC =	Copper Lug Kit③
N =	Neutral
N2 =	200% Neutral③
NCM =	Field Replacement Lug Kit②
P =	Fuse Puller Kit
R =	Class R - Fuse Clip Kit
T =	Class T - Fuse Kit

Series Type

A =	All General Duty, 400A HD, 600A HD
Omit =	All HD except 400A, 600A

Amperes

1 =	30A	**1234** =	30/60/100/200A
2 =	60A	**4** =	200A
12 =	30/60A	**5** =	400A
3 =	100A	**56** =	400/600A
23 =	60/100A	**5678** =	400/600/800/1200A
123 =	30/60/100A	**6** =	600A
		78 =	800/1200A

Maximum Voltage

2 =	240V Max①
6 =	600V Max

Note: Catalog numbering systems above do not apply to 4-pole & Type "F" & "FR" double throw switches & accessories.

① For 400A, 600A use 680V max accessories except for T Fuse Kit.
② Only offered for 400A, 600A.
③ For 30A-200A, 800A-1200A.
④ Quick install switches are NEMA 3R rated with ground lug included and no top top hub provision.

Wire Ranges (Line, Load and Standard Neutral)

Switch Ampere Rating	Wire Range with Wire Bending Space Per NEC Requirements	Lug Wire Range
30GD	#14-8 AWG (Cu/Al)	#14-2 AWG (Cu/Al)①
60GD	#14-6 AWG (Cu)	#14-2 AWG (Cu)①
30HD	#14-6 AWG (Cu/Al)	#14-2 AWG (Cu/Al)
60HD②③	#14-3 AWG (Cu/Al)	#14-2 AWG (Cu/Al)
100④	#14-1/0 AWG (Cu/Al)	#14-1/0 AWG (Cu/Al)
200⑤	#6 AWG-250 Kcmil (Cu/Al)	#6 AWG-300 Kcmil (Cu/Al)
400⑥	(1) 1/0 AWG-600 Kcmil (Cu/Al) (2) 1/0 AWG-500 Kcmil (Cu/Al)	(2) 1/0 AWG-600 Kcmil (Cu/Al)
600⑥	(1) 1/0 AWG-600 Kcmil (Cu/Al) (2) 1/0 AWG-500 Kcmil (Cu/Al)	(2) 1/0 AWG-600 Kcmil (Cu/Al)
800	(3) 1/0 AWG-750 Kcmil (Cu/Al) Line Load (4) 1/0 AWG-750 Kcmil (Cu/Al) neutral	(3) 1/0 AWG-750 Kcmil (Cu/Al) Line Load (4) 1/0 AWG-750 Kcmil (Cu/Al) neutral
1200	(4) 3/0 AWG-750 Kcmil (Cu/Al) Line Load (4) 1/0 AWG-750 Kcmil (Cu/Al) neutral	(4) 1/0 AWG-750 Kcmil (Cu/Al) Line Load (4) 1/0 AWG-750 Kcmil (Cu/Al) neutral

■ Built to order. Allow 3-4 weeks for delivery.

① Neutral lugs (only) are UL approved to accept #14-4 CU/Al cable.
② Compact HD NF switches are also UL approved for #2 Cu/Al conductors.
③ Also for 30A oversized heavy duty switches.
④ Also for 60A oversized heavy duty switches.
⑤ All 200A Heavy Duty Switches have a wire range & wire bending space for (1) #6-300 Kcmil (Cu/Al).
⑥ Max. wire size for height reduced switches is 500 kcmil (Cu/Al).

Non-Fusible Safety Switch Short Circuit Current Ratings when protected by a Molded Case Circuit Breaker (MCCB)

Heavy Duty Switch Rating (Amps)	Fuse Class or Circuit Breaker Type	3-Phase			250 VDC / 600 VDC
		240 VAC	480 VAC	600 VAC	
Protected by Fuse					
All	H, K	10 kA	10 kA	10 kA	Up to 10 kA
	R, T, J, L	200 kA	200 kA	200 kA	—
Protected by Circuit Breaker					
All	Any Brand CB	10 kA	10 kA	10 kA	Up to 10 kA
Protected by 3VA Circuit Breaker①					
30	SEAS / SEAB	18 kA	18 kA	18 kA	Up to 10 kA
30	MEAS / MEAB	18 kA	18 kA	18 kA	
60-100	SEAS / SEAB	65 kA	25 kA	14 kA	
60-100	MEAS / MEAB	85 kA	35 kA	18 kA	
60-100	HEAS / HEAB	150 kA	65 kA	25 kA	
60-100	MDAE	100 kA	35 kA	18 kA	
60-100	HDAE	100 kA	65 kA	22 kA	
60-100	CDAE	200 kA	100 kA	35 kA	
60-100	LDAE	200 kA	150 kA	50 kA	
60-100	EDAE	—	200 kA	100 kA	
200	MFAS	85 kA	35 kA	18 kA	
200	HFAS	100 kA	65 kA	25 kA	
200	CFAS	200 kA	100 kA	35 kA	
200	MFAE	100 kA	35 kA	18 kA	
200	HFAE	100 kA	65 kA	22 kA	
200	CFAE	200 kA	100 kA	35 kA	
200	LFAE	200 kA	150 kA	50 kA	
200	EFAE	—	200 kA	100 kA	
400	MJAS	85 kA	35 kA	18 kA	
400	HJAS	100 kA	65 kA	25 kA	
400	CJAS	200 kA	100 kA	35 kA	
400	MJAE	100 kA	35 kA	18 kA	
400	HJAE	100 kA	65 kA	22 kA	
400	CJAE	200 kA	100 kA	35 kA	
400	LJAE	200 kA	150 kA	50 kA	
400	EJAE	—	200 kA	100 kA	
600	MLAS	85 kA	35 kA	18 kA	
600	HLAS	100 kA	65 kA	25 kA	
600	CLAS	200 kA	100 kA	35 kA	
600	MLAE	100 kA	35 kA	18 kA	
600	HLAE	100 kA	65 kA	22 kA	
600	CLAE	200 kA	100 kA	35 kA	
600	LLAE	200 kA	150 kA	50 kA	
600	ELAE	—	200 kA	100 kA	
Protected by Sentron Circuit Breaker②					
30	EDAE	200 kA	100 kA	100 kA	Up to 10 kA
60-100	EDAE	200 kA	200 kA	100 kA	
60-100	NEB, NGB, NEG, NGG, ED4	18 kA	18 kA	—	
60-100	ED6	18 kA	18 kA	18 kA	
200	F(X)D6-A, J(X)D6-A	18 kA	18 kA	18 kA	
400	(H)J(X)D6-A, (H)L(X)D6-A	25 kA	25 kA	25 kA	
600	(H)L(X)D6-A	25 kA	25 kA	25 kA	
1200	NNG	25 kA	25 kA	25 kA	

① Includes Nonfused Double throw and OEM switches 30-200 amps
② Includes Nonfused Double throw and OEM switches

Non-Fusible Safety Switch Short Circuit Current Ratings when protected by a Molded Case Circuit Breaker (MCCB) cont.

General Duty Switch Rating (Amps)	Fuse Class or Circuit Breaker Type	3-Phase			250 VDC
		240 VAC	480 VAC	600 VAC	
Protected by Fuse					
All	H, K, R, T, J	10 kA	—	—	Up to 10 kA
Protected by Circuit Breaker					
All	Any Brand CB	10 kA	—	—	Up to 10 kA
Protected by 3VA Circuit Breaker①					
60-100	SEAS / SEAB	65 kA	—	—	Up to 10 kA
60-100	MEAS / MEAB	85 kA	—	—	
60-100	MDAE	100 kA	—	—	
60-100	HDAE	100 kA	—	—	
200	MFAS	85 kA	—	—	
200	HFAS	100 kA	—	—	
200	MFAE	100 kA	—	—	
200	HFAE	100 kA	—	—	
400	MJAS	85 kA	—	—	
400	HJAS	100 kA	—	—	
400	MJAE	100 kA	—	—	
400	HJAE	100 kA	—	—	
600	MLAS	85 kA	—	—	
600	HLAS	100 kA	—	—	
600	MLAE	100 kA	—	—	
600	HLAE	100 kA	—	—	

Non-Fusible Safety Switch Short Circuit Current Ratings when protected by a Legacy Circuit Breaker

Breaker Frame	Non-Fused Switch	UL Listed Short Circuit Current Rating
NEG, NGB, ED4	30 DT (240V)	18 kA Thru 240 VAC
NEB, NEG, NGG, NGB, ED4	100A GD & DT (240V)	18 kA Thru 240 VAC
NEB, NEG, NGG, NGB, ED4	30-100A HD & DT (600V)	18 kA Thru 480 VAC
ED6	30-100A HD & DT (600V)	18 kA Thru 600 VAC
FD6-A, JD6-A	200A HD & DT (600V)	18 KA Thru 600 VAC
JD6-A, LD6-A	400A GD & DT (240V)	18 kA Thru 240 VAC
JD6-A, LD6-A	400A HD & DT (600V)	18 kA Thru 600 VAC
LD6-A	600A GD & DT (240V)	25kA Thru 240 VAC
LD6-A	600A HD & DT (600V)	25kA Thru 600 VAC
NNG	1200A HD & DT (600V)	25 kA Thru 600 VAC

① Includes Nonfused Double throw and OEM switches 30-200 amps

General Duty Safety Switches

Features (60-600A)

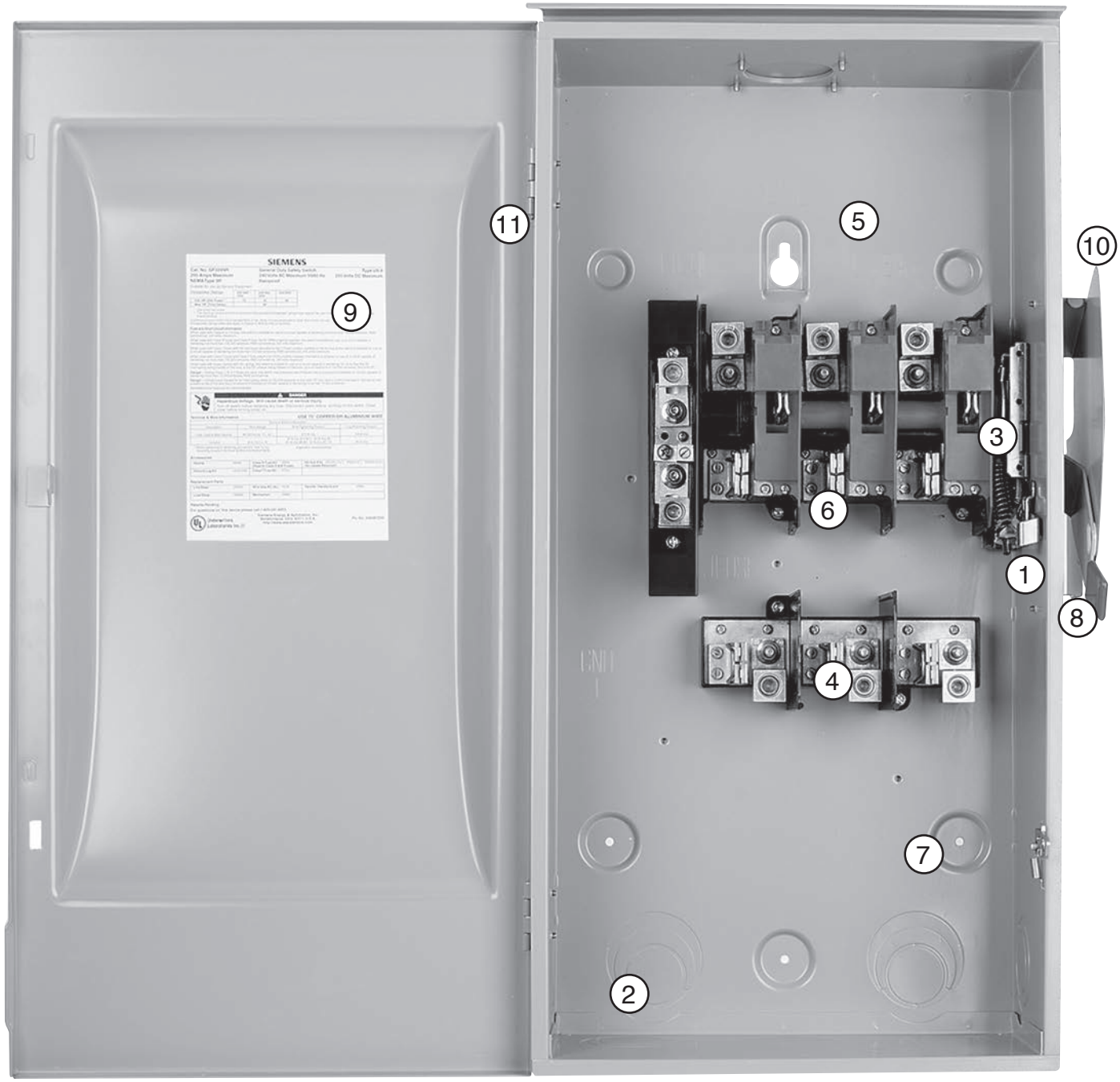

1. Cover interlock
2. Tangential knockouts 100-600A for easy conduit lineup
3. Quick-make, quick-break operating mechanism that ensures positive operation
4. Provisions for T, R, J, H, and K class fuses (T & J 100-600A)
5. Wiring gutters that meet or exceed NEC wire-bending space requirements
6. Visible blade, double-break switch action
7. Positive 2 or 3 point mounting
8. Highly visible red handle grip
9. Informative door labeling which includes replacement parts list
10. Handle and cover padlocking provisions
11. 100A and above have side-hinged door that opens 180 degrees for easier wiring

Note. 400A and 600A GD switches include internal shields which meet 2020 NEC 230.62 touch safe requirements for service entrance equipment.

240 Volt Fusible

Selection





System	Ampere Rating	Indoor — Type 1 Catalog Number	Indoor — Type 1 Ship Wt. (lbs) Std. Pkg	Outdoor — Type 3R Catalog Number	Outdoor — Type 3R Ship Wt. (lbs) Std. Pkg	Horsepower Rating① 240V AC 1-Phase, 2-Wire Std.	1-Phase, 2-Wire Max.	2-Phase, 4-Wire Std.	2-Phase, 4-Wire Max.	3-Phase, 3-Wire Std.	3-Phase, 3-Wire Max.	250 Volt DC Std.

240 Volt Fusible②

2-Pole, 2-Fuse, and Solid Neutral③④ — 240 Volt AC/250 Volt DC

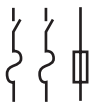

Ampere Rating	Indoor — Type 1 Catalog Number	Indoor — Type 1 Ship Wt. (lbs) Std. Pkg	Outdoor — Type 3R Catalog Number	Outdoor — Type 3R Ship Wt. (lbs) Std. Pkg	Horsepower Rating① 240V AC 1-Phase, 2-Wire Std.	1-Phase, 2-Wire Max.	2-Phase, 4-Wire Std.	2-Phase, 4-Wire Max.	3-Phase, 3-Wire Std.	3-Phase, 3-Wire Max.	250 Volt DC Std.
30	**GF221NA**⑤	30⑦	**GF221NRA**⑤⑨	30⑦	1½	3	—	—	3	7½	5
30	**GF221NLA**④	20⑧	**GF221NRLA**⑥⑨	20⑧	1½	3	—	—	3	7½	5
60	**GF222NA**	20⑧	**GF222NRA**⑨	20⑧	3	10	—	—	7½	15	10
100	**GF223NA**	17	**GF223NRA**	17	7½	15	—	—	15	30	20
200	**GF224NA**	37	**GF224NRA**	37	15	—	—	—	25	60	40
400	**GF225NA**	91	**GF225NRA**	91	—	—	—	—	50	125	50
600	**GF226NA**	92	**GF226NRA**	92	—	—	—	—	75	200	50

3-Pole, 3-Fuse, and Solid Neutral④ — 240 Volt AC/250 Volt DC

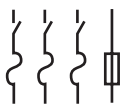

Ampere Rating	Indoor — Type 1 Catalog Number	Indoor — Type 1 Ship Wt. (lbs) Std. Pkg	Outdoor — Type 3R Catalog Number	Outdoor — Type 3R Ship Wt. (lbs) Std. Pkg	Horsepower Rating① 240V AC 1-Phase, 2-Wire Std.	1-Phase, 2-Wire Max.	2-Phase, 4-Wire Std.	2-Phase, 4-Wire Max.	3-Phase, 3-Wire Std.	3-Phase, 3-Wire Max.	250 Volt DC Std.
30	**GF321NA**⑤	30⑦	**GF321NRA**⑤⑨	30⑦	1½	3	—	—	3	7½	5
30	**GF321NLA**⑥	20⑧	**GF321NRLA**⑥⑨	20⑧	1½	3	—	—	3	7½	5
60	**GF322NA**	20⑧	**GF322NRA**⑨	20⑧	3	10	—	—	7½	15	10
100	**GF323NA**	17.5	**GF323NRA**	17.5	7½	15	—	—	15	30	20
100	**GF323NLA**	22.5	**GF323NLA**	22.5	7½	15	—	—	15	30	20
200	**GF324NA**	37	**GF324NRA**	37	15	—	—	—	25	60	40
200	**GF324NLA**	43.5	**GF324NRLA**	43.5	15	—	—	—	25	60	40
400	**GF325NA**	94.6	**GF325NRA**	94.6	15	—	—	—	50	125	50
600	**GF326NA**	95.6	**GF326NRA**	95.6	15	—	—	—	75	200	—

① Dual HP ratings: Std.- applies with installed non-time delay fuses. Max.- applies with installed time-delay fuses.
② Internal shields for 30A to 200A switches to meet 2020 NEC 230.62 touch safe requirements for service entrance equipment can be purchased separately.
③ These switches are UL-listed for application on grounded B-phase systems.
④ Service entrance labeled unless otherwise noted.
⑤ Compact series
⑥ PLUS series: largest enclosure option for 60A non-fusible, 30A fusible.
⑦ 10 switches per standard package.
⑧ 5 switches per standard package.
⑨ Has provision for ECHA type hub.

240 Volt Non-fusible

Selection





System	Ampere Rating	Indoor — Type 1 Catalog Number	Indoor — Type 1 Ship Wt. (lbs) Std. Pkg	Outdoor — Type 3R Catalog Number	Outdoor — Type 3R Ship Wt. (lbs) Std. Pkg	Horsepower Rating① 240V AC 1-Phase, 2-Wire Std.	1-Phase, 2-Wire Max.	2-Phase, 4-Wire Std.	2-Phase, 4-Wire Max.	3-Phase, 3-Wire Std.	3-Phase, 3-Wire Max.	250 Volt DC Std.

240 Volt Non-Fusible②③

2-Pole Quick Install — 1 or 2-Pole — No Fuse — 240 Volt — 1-Phase, 2-Wire

	30	—	—	**LNF221RLA**④	30⑦	—	3	—	—	—	—	—
	30	—	—	**LNF221RLLA**④⑤	38⑧	—	3	—	—	—	—	—
	60	—	—	**LNF222RA**④	30⑦	—	10	—	—	—	—	—
	60	—	—	**LNF222RLA**④⑥	38⑧	—	10	—	—	—	—	—

2-Pole or 3-Pole — 240 Volt AC/250 Volt DC

	30	**GNF221A**⑨⑩	20⑦	**GNF221RA**⑨⑩⑭	20⑦	—	3	—	—	—	—	5
	30	**GNF221LA**⑪	30⑦	**GNF221RLA**⑪⑭	30⑦	—	3	—	—	7½	—	5
	30	**GNF221LLA**⑫	20⑧	**GNF221RLLA**⑫⑭	20⑧	—	3	—	—	7½	—	5
	30	**GNF321A**⑨⑩	20⑦	**GNF321RA**⑨⑩⑭	20⑧	—	3	—	—	7½	—	5
	30	**GNF321LA**⑪	30⑦	**GNF321RLA**⑪⑭	30⑦	—	3	—	—	7½	—	5
	30	**GNF321LLA**⑫	20⑧	**GNF321RLLA**⑫⑭	20⑧	—	3	—	—	7½	—	5
	60	**GNF222A**	30⑦	**GNF222RA**⑭	30⑦	—	10	—	—	15	—	10
	60	**GNF222LA**⑬	20⑧	**GNF222RLA**⑬⑭	20⑧	—	10	—	—	15	—	10
	60	**GNF322A**	30⑦	**GNF322RA**⑭	30⑦	—	10	—	—	15	—	10
	60	**GNF322LA**⑬	20⑧	**GNF322RLA**⑬⑭	20⑧	—	10	—	—	15	—	10
	100	—	—	**GNF223RA**	17	—	15	—	—	30	—	20
	100	**GNF323A**	17	**GNF323RA**	18	—	15	—	—	30	—	20
	200	—	—	**GNF224RA**	35	—	15	—	—	60	—	40
	200	**GNF324A**	35	**GNF324RA**	35	—	15	—	—	60	—	40
	400	**GNF325A**	114	Use 600V Switch **HNF365RA**		—	15	—	—	125	—	50
	600	**GNF326A**	116	Use 600V Switch **HNF366RA**		—	15	—	—	200	—	—

① Dual HP ratings: Std.- applies with installed non-time delay fuses. Max.- applies with installed time-delay fuses.
② Service entrance labeled unless otherwise noted.
③ Internal shields for 30A to 200A switches to meet 2020 NEC 230.62 touch safe requirements for service entrance equipment can be purchased separately.
④ Quick install switches are NEMA 3R rated with ground lug included and no top top hub provision.
⑤ MAX series: Larger enclosure compared to LNF221RLA.
⑥ PLUS series: Larger enclosure compared to LNF222RA.
⑦ 10 switches per standard package.
⑧ 5 switches per standard package.
⑨ Not suitable for service entrance.
⑩ Compact series
⑪ PLUS series: larger enclosure, metal handle, quick make-break action.
⑫ MAX series: largest enclosure option for 30A non-fusible, included same upgraded features as PLUS series and additional KOs.
⑬ PLUS series: largest enclosure option for 60A non-fusible, 30A fusible.
⑭ Has provision for ECHA type hub.

Heavy Duty Safety Switches

Features

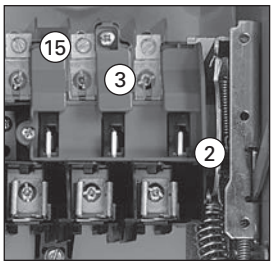



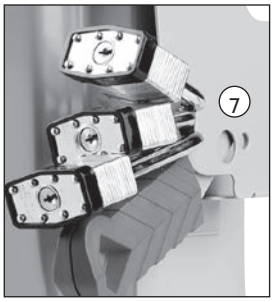



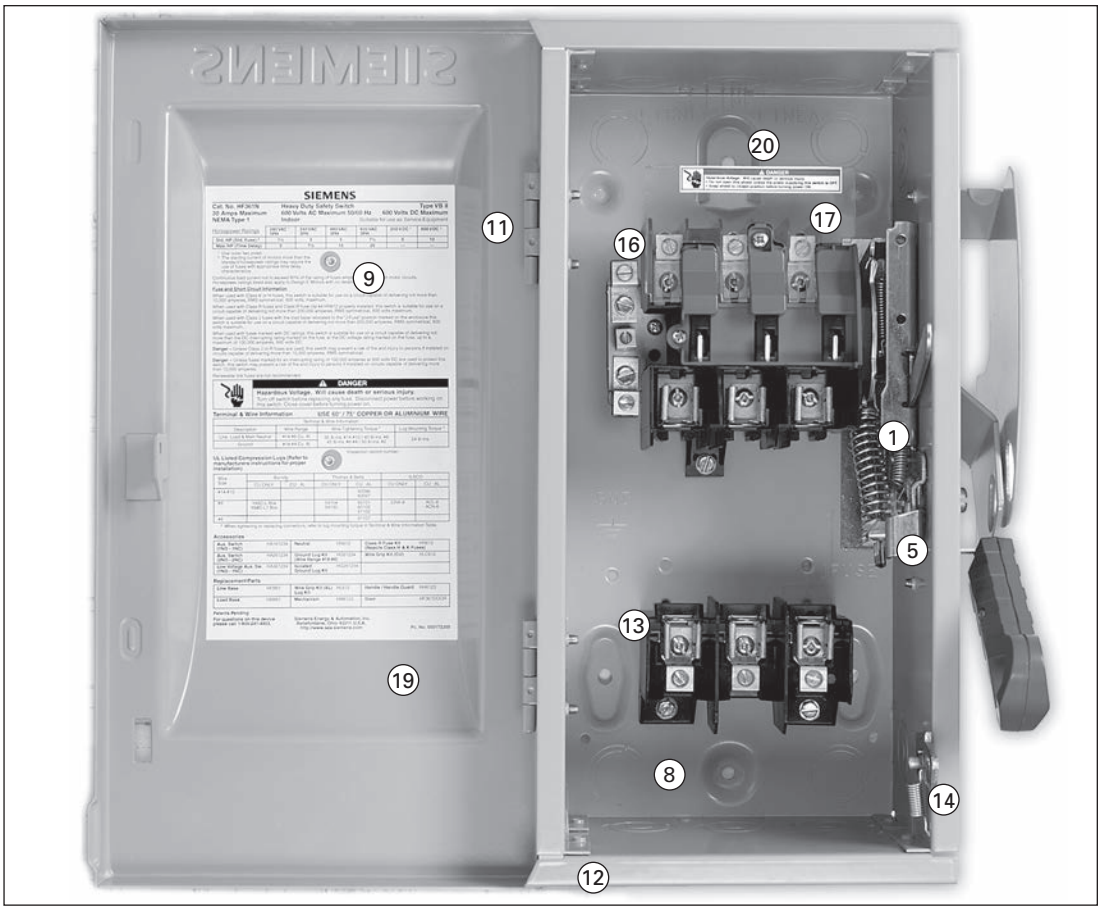

1. Quick-make, quick-break operating mechanism that ensures positive operation.
2. Visible blade, double-break switching action.
3. Arc chutes dissipate heat and prolong switch life.
4. Highly visible red handle grip. Designed for hook stick operation.
5. Defeatable dual cover interlock.
6. Center punch provided for field drilling to allow ON padlocking.
7. Handle can be padlocked in the OFF position with up to (3) padlocks with 5/16" hasps.
8. Generous top, bottom and side gutters that meet or exceed NEC wire-bending space requirements.
9. Informative door labeling which includes replacement parts list.
10. Tangential knockouts through 600A for easy conduit lineup.
11. Side-hinged door that opens past 180 degrees for easier wiring.
12. Unique enclosure design increases rigidity and prevents cuts and scrapes to conductors and installer's hands.
13. Spring reinforced fuse clips that assure reliable contact for cool operation.
14. Door latch securely holds door closed and allows cover padlocking.
15. Front removable mechanical lugs that are suitable for CU/Al 60 or 75° C conductors.
16. Lugs are field convertible to copper body and to a wide variety of compression connectors.
17. Hinged clear line terminal shield with probe holes for inspecting or testing line side terminals.
18. Embossed aluminum nameplate on Heavy Duty Switches provides highly visible ON/OFF indication.
19. Drawn cover for increased rigidity and resistance to abuse.
20. Top key hole and bottom mounting holes provide easy 2 or 3 point mounting.

Heavy Duty Safety Switches

Selection





System	Ampere Rating	Indoor — Type 1 Catalog Number	Indoor — Type 1 Ship Wt. (lbs.) Std. Pkg	Outdoor — Type 3R Catalog Number	Outdoor — Type 3R Ship Wt. (lbs.) Std. Pkg	Horsepower Rating① 240V AC 1-Phase, 2-Wire Std.	1-Phase, 2-Wire Max.	2-Phase, 4-Wire Std.	2-Phase, 4-Wire Max.	3-Phase, 3-Wire Std.	3-Phase, 3-Wire Max.	250 Volt DC Std.

240 Volt Fusible⑤

2-Pole, 2-Fuse, and Solid Neutral③ (Also used for 2-Pole, 2-Wire Applications) 240 Volt AC/250 Volt DC

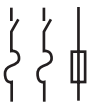

30	HF221N	12	HF221NR	13	1½	3	—	—	3	7½	5
60	HF222N	18	HF222NR	19	3	10	—	—	7½	15	10
100	HF223N	23	HF223NR	24	7½	15	—	—	15	30	20
200	HF224N	47	HF224NR	48	15	—	—	—	25	60	40
400	HF225NA	91.1	HF225NRA	91.1	15	—	—	—	50	125	50
600	HF226NA	95.6	HF226NRA	95.6	15	—	—	—	75	200	50
800	HF227N	365	HF227NR	365	—	—	—	—	100	250	50
1200	HF228N■	385	HF228NR■	385	—	—	—	—	100	250	50

3-Pole, 3-Fuse, and Solid Neutral (Also used for 3-Pole, 3-Wire Applications) 240 Volt AC/250 Volt DC

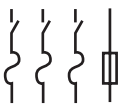

30	HF321N	14	HF321NR	15	1½	3	—	—	3	7½	5
60	HF322N	19	HF322NR	20	3	10	—	—	7½	15	10
100	HF323N	25	HF323NR	26	7½	15	—	—	15	30	20
200	HF324N	49	HF324NR	50	15	—	—	—	25	60	40
400	HF325NA	94.6	HF325NRA	94.6	15	—	—	—	50	125	50
600	HF326NA	99.6	HF326NRA	99.6	15	—	—	—	75	200	50
800	HF327N	375	HF327NR	375	—	—	—	—	100	250	50
1200	HF328N	395	HF328NR	388	—	—	—	—	100	250	50

240 Volt Fusible⑤

2-Pole, 2-Fuse④ 240 Volt AC/250 Volt DC

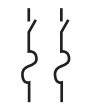

	Type 4/4X Stainless⑦		Type 12 Industrial⑥								
30	HF221S	13	HF221J	13	1½	3	—	—	3	7½	5
60	HF222S	19	HF222J	19	3	10	—	—	7½	15	10
100	HF223S	24	HF223J	24	7½	15	—	—	15	30	20
200	HF224S	48	HF224J	48	15	—	—	—	25	60	40

3-Pole, 3-Fuse④ (Also used for 2-Pole, 2-Wire Applications in 400–800A Ratings) 240 Volt AC/250 Volt DC



30	HF321S	14	HF321J	14	1½	3	—	—	3	7½	—
60	HF322S	20	HF322J	20	3	10	—	—	7½	15	10
100	HF323S	25	HF323J	25	7½	15	—	—	15	30	20
200	HF324S	49	HF324J	49	15	—	—	—	25	60	40
400	HF325SA	93	HF325JA	93	15	—	—	—	50	125	50
600	HF326SA	98	HF326JA	98	15	—	—	—	75	200	50
800	HF327S■	370	HF327J■	365	—	—	—	—	100	250	50

■ Built to order. Allow 3-5 weeks for delivery.
① Height reduced switch (45.25 rather than 56 inches in height) for use with 500MCM or smaller conductors.
② Dual horsepower ratings: Std.- applies when non-time delay fuses are installed. Max.- applies when time-delay fuses are installed.
③ These switches are UL-listed for application on grounded B-phase systems and are suitable for 3-phase motor applications.
④ When a neutral is required use a field installed neutral kit.
⑤ Suitable for use as service entrance equipment.
⑥ Also rated Type 3S/3R.
⑦ 304 grade stainless steel. For switches with enclosures constructed from 316 grade stainless steel, substitute "SS" in catalog number for "S." 316 available up through 600A.

Heavy Duty Safety Switches

Selection





System	Ampere Rating	Indoor — Type 1 Catalog Number	Indoor — Type 1 Ship Wt. (lbs.) Std. Pkg	Outdoor — Type 3R Catalog Number	Outdoor — Type 3R Ship Wt. (lbs.) Std. Pkg	Horsepower Rating④ 480V AC 1-Phase, 2-Wire Std.	480V AC 1-Phase, 2-Wire Max.	480V AC 3-Phase, 3-Wire Std.	480V AC 3-Phase, 3-Wire Max.	600V AC 1-Phase, 2-Wire Std.	600V AC 1-Phase, 2-Wire Max.	600V AC 3-Phase, 3-Wire Std.	600V AC 3-Phase, 3-Wire Max.	250 Volt DC	600 Volt DC
600 Volt Fusible⑤															
2-Pole, 2-Fuse③														**480 Volt AC/600 Volt AC/600 Volt DC**	
	30	HF261	15	HF261R	15	3	7½	—	—	3	10	—	—	5	15
	60	HF262	20	HF262R	20	5	20	—	—	10	25	—	—	10	30
	100	HF263	26	HF263R	27	10	30	—	—	15	40	—	—	20	50
3-Pole, 3-Fuse														**480 Volt AC/600 Volt AC/250 Volt DC①**	
	30	HF361	14	HF361R	15	3	7½	5	15	3	10	7½	20	5	—
	30	—	—	HF361RL⑦	20	3	7½	5	15	3	10	7½	20	5	—
	60	HF362	19	HF362R	20	5	20	15	30	10	25	15	50	10	30⑧
	60	—	—	HF362RL⑦	25	5	20	15	30	10	25	15	50	10	30⑧
	100	HF363	24	HF363R	25	5	20	25	60	15	40	30	75	20	50⑧
	200	HF364	48	HF364R	49	25	50	50	125	30	50	60	150	40	50
	400	HF365A①	93	HF365RA①	157	—	—	100	250	—	—	125	350	50	—
	600	HF366A①	98	HF366RA①	161	—	—	150	400	—	—	200	500	50	—
	800	HF367	365	HF367R	365	—	—	200	500	—	—	250	500	50	—
	1200	HF368	383	HF368R	385	—	—	200	500	—	—	250	500	50	—
3-Pole, 3-Fuse and Solid Neutral														**480 Volt AC/600 Volt AC/250 Volt DC①**	
	30	HF361N	14	HF361NR	15	3	7½	5	15	3	10	7½	20	5	—
	60	HF362N	19	HF362NR	20	5	20	15	30	10	25	15	50	10	30⑧
	100	HF363N	25	HF363NR	26	10	30	25	60	15	40	30	75	20	50⑧
	200	HF364N	49	HF364NR	50	25	50	50	125	30	50	60	150	40	50
	400	HF365NA	94.6	HF365NRA	94.6	—	—	100	250	—	—	125	350	50	—
	600	HF366NA	99.6	HF366NRA	99.6	—	—	150	400	—	—	200	500	50	—
	800	HF367N	375	HF367NR	375	—	—	250	500	—	—	250	500	50	—
	1200	HF368N	395	HF368NR	388	—	—	250	500	—	—	250	500	50	—
600 Volt Fusible⑤															
2-Pole, 2-Fuse③														**480 Volt AC/600 Volt AC/600 Volt DC**	
		Type 4/4X Stainless⑨		Type 12 Industrial⑥											
	30	HF261S	15	HF261J■	15	3	7½	—	—	3	10	—	—	5	15
	60	HF262S	20	HF262J■	20	5	20	—	—	10	25	—	—	10	30
	100	HF263S■	27	HF263J■	27	10	30	—	—	15	40	—	—	20	50
3-Pole, 3-Fuse														**480 Volt AC/600 Volt AC/250 Volt DC①**	
	30	HF361S	13	HF361J	14	—	—	5	15	—	—	7½	20	5	—
	60	HF362S	20	HF362J	20	—	—	15	30	—	—	15	50	10	30⑧
	100	HF363S	25	HF363J	25	—	—	25	60	—	—	30	75	20	50⑧
	200	HF364S	49	HF364J	49	—	—	50	125	—	—	60	150	40	50
	400	HF365SA①	93	HF365JA①	93	—	—	100	250	—	—	125	350	50	—
	600	HF366SA①	98	HF366JA①	98	—	—	150	400	—	—	200	500	50	—
	800	HF367S	370	HF367J■	365	—	—	200	500	—	—	250	500	50	—
	1200	HF368S■	388	HF368J■	388	—	—	250	500	—	—	250	500	50	—

■ Built to order. Allow 3-5 weeks for delivery.
① 60-600A 3-Pole switches are also rated 600V DC.
② Height reduced switch (45.25 rather than 56 inches in height) for use with 500MCM or smaller conductors.
③ Use 3-Pole switch for 200A applications.
④ Dual horsepower ratings: Std.- applies when non-time delay fuses are installed. Max.- applies when time-delay fuses are installed.
⑤ Suitable for use as service entrance equipment except on 1200 Amp solidly grounded wye systems per NEC 230.95.
⑥ Also rated Type 3S/3R.
⑦ Indicates oversized enclosure (30A switch with 60A lugs in a 60A enclosure or 60A switch with 100A lugs in a 100A enclosure).
⑧ 600V DC & 600V DC horsepower rating shown requires (2) poles to be connected in series.
⑨ 304 grade stainless steel. For switches with enclosures constructed from 316 grade stainless steel, substitute "SS" in catalog number for "S." 316 available up through 600A.

Heavy Duty Safety Switches

Selection





System	Ampere Rating	Indoor — Type 1 Catalog Number	Indoor — Type 1 Ship Wt. (lbs.)	Outdoor — Type 3R Catalog Number	Outdoor — Type 3R Ship Wt. (lbs.)	Horsepower Rating 240 Volt 1-Phase	240 Volt 3-Phase	480 Volt 1-Phase	480 Volt 3-Phase	600 Volt 1-Phase	600 Volt 3-Phase	250V DC	600V DC
600 Volt Non-Fusible④													
2-Pole③												**480 Volt AC / 600 Volt AC / 600 Volt DC**	
	30	**HNF261**	12	**HNF261R**	13	—	—	7½	—	10	—	5	15
	60	**HNF262**	19	**HNF262R**	20	—	—	20	—	25	—	10	30
	100	**HNF263**	24	**HNF263R**	25	—	—	30	—	40	—	20	50
3-Pole												**480 Volt AC / 600 Volt AC / 250 Volt DC**	
	30	**HNF361**	12	**HNF361R**	13	5	10	7½	20	10	30	5	—
	30	**—**	—	**HNF361RL⑥**	19	5	10	7½	20	10	30	5	—
	60	**HNF362H②**	11	**HNF362RH②**	11	10	20	20	50	20	40	10	—
	60	**HNF362①**	18	**HNF362R①**	19	10	20	20	50	25	60	10	30⑦
	60	**—**	—	**HNF362RL⑥**	24	10	20	20	50	25	60	10	30⑦
	100	**HNF363①**	16	**HNF363R①**	16	15	40	30	75	40	100	20	50⑦
	100	**HNF363L**	22½	**HNF363RL**	22½	15	40	30	75	40	100	20	50
	200	**HNF364①**	35	**HNF364R①**	35	15	60	50	125	50	150	40	50
	200	**HNF364L**	43½	**HNF364RL**	43½	15	60	50	125	50	150	40	50
	400	**HNF365A①**	75	**HNF365RA①**	75	15	125	50	250	50	350	50	—
	600	**HNF366A①**	77	**HNF366RA①**	77	15	200	50	400	50	500	50	—
	800	**HNF367**	295	**HNF367R**	295	15	250	50	500	50	500	50	—
	1200	**HNF368**	305	**HNF368R**	307	15	250	50	500	50	500	50	—
600 Volt Non-Fusible④													
2-Pole③												**480 Volt AC / 600 Volt AC / 600 Volt DC**	
		Type 4 / 4X Stainless⑧		**Type 12 Industrial⑤**									
	30	**HNF261S**	13	**HNF261J**	13	—	—	7½	—	10	—	5	15
	60	**HNF262S**	20	**HNF262J**	20	—	—	20	—	25	—	10	30
	100	**HNF263S■**	25	**HNF263J■**	25	—	—	30	—	40	—	20	50
3-Pole												**480 Volt AC / 600 Volt AC / 250 Volt DC**	
	30	**HNF361S**	13	**HNF361J**	13	5	10	7½	20	10	30	5	—
	60	**HNF362SH②**	15	**HNF362JH②**	14	10	20	20	50	20	40	10	—
	60	**HNF362S①**	19	**HNF362J①**	19	10	20	20	50	25	60	10	30⑦
	100	**HNF363S①**	24	**HNF363J①**	24	15	40	30	75	40	100	20	50⑦
	200	**HNF364S①**	47	**HNF364J①**	47	15	60	50	125	50	150	40	50
	400	**HNF365SA①**	75	**HNF365JA①**	75	15	125	50	250	50	350	50	—
	600	**HNF366SA①**	77	**HNF366JA①**	77	15	200	50	400	50	500	50	—
	800	**HNF367S**	295	**HNF367J■**	295	15	250	50	500	50	500	50	—
	1200	**HNF368S■**	310	**HNF368J■**	310	15	250	50	500	50	500	50	—

■ Built to order. Allow 3-5 weeks for delivery.
① 60-600A 3-Pole switches are also rated 600V DC.
② Compact switch (11.1"H, 6.6"W box less cover and handle). Short circuit withstand rating—100,000 RMS sym. amps.
③ Use 3-Pole switch for 200A application.
④ Suitable for use as service entrance equipment except for 1200 when used on a 480 or 600V grounded wye system.
⑤ Also rated type 3S / 3R.
⑥ Indicates oversized enclosure (30A switch in a 60A enclosure or a 60A switch in a 100A enclosure.
⑦ 600V DC and 600V DC horsepower rating shown requires (2) poles to be connected in series.
⑧ 304 grade stainless steel. For switches with enclosures constructed from 316 grade stainless steel, substitute "SS" in catalog number for "S." 316 available for up through 600A.

Elevator Control Switches in NEMA Type 1, 3R, and 12 Enclosures

Description

The new Siemens Series-A Elevator Control Switch (ECS) is designed to interrupt incoming AC power upon receiving a signal from a Fire Alarm Control Panel (FACP) for both cable and hydraulic elevators.

Siemens' new Series-A ECS retains the same functionality as the legacy ECS but with notable improvements. Upgraded components allow for easier maintenance, reduced configuration complexity, and better lead times. The 3VA switch with shunt trip capability, is fully field serviceable and can utilize 3VA accessories. The standard 3-pole fire alarm voltage monitoring relay has been made standard, further simplifying the ECS configuration.

The Elevator Control Switch comes completely assembled for quick installation, eliminating the labor and time needed to assemble individual components. The smart numbering system helps ensure the switch includes the correct components and eliminates the need for ordering accessories.

Siemens ECS supports fused systems requiring selective coordination code compliance. The ECS achieves the code requirement by utilizing Class J fuses which coordinate with any upstream fuse by simply using a 2:1 line-side to load-side fuse ratio.

Agency information

- UL 98 Enclosed and Dead Front Switch



Catalog number system

The following catalog numbering system defines an Elevator Control Switch construction. Note that 3 pole fire alarm voltage monitoring relays and auxiliary contacts come standard with the series-A switch.

ECS	1	T2	R2	G	J	N	C	A

Elevator Control Switches

Ampere rating

1 = 30 A
2 = 60 A
3 = 100 A
4 = 200 A
5 = 400A

Control Transformer①

T2 = 208 V
T3 = 240 V
T1 = 480 V
T4 = 600 V

Fire Safety Interface Relay (3PDT, 10 A, 120 V)

R2 = 24 Vdc Coil
R1 = 120 Vac Coil

Pilot Light ON

G = Green
R = Red
W = White

Enclosure options (NEMA 1 Standard with no suffix designation required)③

J = NEMA 1/3R/12

Neutral Lug

N = Isolated Full Capacity

Surge Protection

C = Integrated surge protection device②

Series A

① 100 VA with Primary and Secondary fusing (120 V Secondary)
② For information on Siemens TPS4 03 protection device refer to product literature or Speedfax.
③ Only 30-100A switches have a NEMA 1 enclosure variant. Utilize "J" suffix if for NEMA 1, 3R, and 12 for 200A and 400A switches.

Elevator Control Switches in NEMA Type 1, 3R, and 12 Enclosures

Features

Standard features

- 30-400 A, 600 Vac, 3-phase fused power switch
- 200 kA RMS assembly short-circuit current rating
- Shunt trip 120 V
- Control power terminal block
- Class J fuse mounting only (Class J fuses not included)
- Key to test switch
- Pilot light – "ON"
- Mechanically interlocked auxiliary contact for hydraulic elevators with battery backup (5 A, 120 Vac rated)
- Handle designed for hook stick operation
- OSHPD Special Seismic Certification Preapproval (OSP)

Configurable standard features

- Control power transformer with fuses and blocks
- Fire safety interface relay
- Fire Alarm Voltage Monitoring Relay (to monitor Shunt Trip Voltage)
- NEMA 1 and 3R/12 enclosures available

Optional features

- Isolated neutral lug①
- Integrated surge protection device (TPS4 03 with current rating of 50kA per phase). Externally viewable though window in door
- Upgraded surge protection (130Ka TPS4 09) can be field installed with an accessory kit
- Field installed compression and copper lugs available up to 200A

Contact closure feature

The contact closure allows for a battery lowering/door opening system. The additional contact offers support for the states of Arizona, Oregon, and Texas requirements to prevent "nuisance" fire alarms by over-riding the "Control Power not Available" signal when the ECS is manually (intentionally) turned off, and distinctive signaling for ON-OFF-TRIPPED conditions.

Shunt-trip operation

The disconnect means is a shunt-trip operated switch. The control power source for the shunt-trip operator is a 120 Vac supply originating in the Siemens Elevator Control switch. Current to the shunt-trip device is switched by an isolation relay, which is in turn controlled by the FACP.

The control signal may be either 24 Vdc from the FACP or a "dry" contact closure in the FACP. In the case of a "dry" contact closure, the sensing voltage is 120 Vac originating in the Siemens Elevator Control switch.

A key test switch is included for testing the shunt-trip circuit.

Supervisory indication

The fire alarm voltage monitoring relay can be specified to monitor the 120 Vac control power source in the Siemens Elevator Control switch. This relay is used to provide supervisory indication of "Control Power Available" as required by NFPA 72 Section 6.15.4.4.

UL_A / NEC_B Listed Horsepower Ratings

	30A		60A		100A		200A		400A	
Voltage / Poles	Std[2]	Max[1]	Std[2]	Max[1]	Std[2]	Max[1]	Std[2]	Max[1]	Std[2]	Max[1]
208VAC / 3 $Pole_B$	2	5	5	10	10	15	20	40	40	75
240VAC / 3 $Pole_A$	2	7 1/2	7 1/2	15	15	30	25	60	50	75
480VAC / 3 $Pole_A$	5	15	15	30	25	60	50	125	100	150
600VAC / 3 $Pole_A$	7 1/2	20	15	50	30	75	60	150	125	200

1 = Max HP w/time delay Class J Fuses
2 = Max HP w/non-time delay Class J Fuses

① The factory installed optional neutral lug is 100% for sizes 30 – 200A and 200% for size 400A. The field installed 200% neutral lug accessory is available for only sizes 200 and 400A.

Reliable protection with remote control capability.

Description

This Heavy-Duty Shunt Trip Fusible Safety Switch combines the robust overcurrent and short circuit protection of a traditional fusible safety switch with the advanced functionality of the Siemens 3VA molded case switch (MCS) with remote controlled shunt trip. It is designed for critical applications where safety, speed, and control are paramount. In addition to interrupting excessive current flow due to overloads and short circuits, it ensures rapid power disconnection in response to a remote signal. It is ideal for emergency shutdown systems, fire safety integration, and automated control environments.

The steadfast protection of the Heavy-Duty Shunt Trip Fusible Safety Switch can be further enhanced with optional surge protection.

The Surge Protection Device (SPD) adds an additional layer of protection further reducing downtime and maintenance costs. It accomplishes this by preventing failures due to external surges, lightning strikes, and utility switching events. This SPD is designed to intercept and neutralize these threats before they reach your critical infrastructure.



Engineered for demanding industrial and commercial environments, this integrated solution offers reliable circuit protection and rapid power disconnection. Whether you're upgrading existing infrastructure or designing a new system, this solution delivers unmatched protection and value in one compact, easy-to-install unit.

Catalog number system

The following catalog numbering system defines a Heavy-Duty Shunt Trip Safety Switch construction.

STF36	1	2	T	C	1	N	J

Fusible Shunt Trip Switch 600 VAC Max

Ampere rating
1 = 30 A
2 = 60 A
3 = 100 A
4 = 200 A
5 = 400A

Shunt Trip Coil
1 = 12VDC①
2 = 24V DC/AC③
3 = 120 VAC

Integrated Control Power Transformer (CPT)③
X = Not included
T = Included and pre-wired to power the shunt trip

Integrated Surge Protection Device (SPD)
X = Not included
C = Included

System Voltage②
X = Not required if neither CPT or SPD is selected
1 = 480
2 = 208
3 = 240
4 = 600

Neutral
(blank) = Not included
N = Included

Enclosure
J = NEMA Type 1/3R/12

① 12 VDC control voltage is externally provided. Integrated CPT does not apply.
② System voltage must be selected if either CPT or surge protection is selected. Leave system voltage blank if neither CPT or surge protection is selected.

③ If both 24V DC/AC coil and CPT is selected, the CPT secondary will be 24V AC. If 24V DC/AC coil is selected without CPT, 24V DC control voltage must be externally provided.
④ The factory installed optional neutral lug is 100% for sizes 30 – 200A and 200% for size 400A. The field installed 200% neutral lug accessory is available for only sizes 200 and 400A.

Heavy-Duty Shunt Trip Safety Switches

Features

Typical applications
- Industrial Facilities
- Commercial Buildings
- Data Centers
- Healthcare Institutions
- Educational Campuses
- Utility Infrastructure

Standard features
- 30-400 A, 600 VAC, 3-phase
- MCS with integrated shunt trip
- Class J fuse base (fuses not included)
- Control circuit terminal strip
- Ground lug
- NEMA Type 1/3R/12 enclosure
- 200 kA RMS assembly short-circuit current rating

Optional features
- Control power transformer
- Integrated surge protection device (TPS4 03) rated at 50kA per phase, externally visible through a window in the enclosure door
- Isolated 100% neutral lug①

Accessories
- Alternate lugs and copper lugs for MCS and fuse base
- Isolated 200% neutral lug①
- Isolated ground lug
- Auxiliary switches, alarm switches, & undervoltage release for MCS
- Line side terminal cover for MCS
- 3SU1 Pilot devices

Standards and certifications
- UL 98 Enclosed and Dead Front Switch
- UL Listed
- UL Listed as Service Entrance Equipment

UL_A / NEC_B Listed Horsepower Ratings

	30A		60A		100A		200A		400A	
Voltage / Poles	Std[2]	Max[1]	Std[2]	Max[1]	Std[2]	Max[1]	Std[2]	Max[1]	Std[2]	Max[1]
208VAC / 3 $Pole_B$	2	5	5	10	10	15	20	40	40	75
240VAC / 3 $Pole_A$	2	7 1/2	7 1/2	15	15	30	25	60	50	75
480VAC / 3 $Pole_A$	5	15	15	30	25	60	50	125	100	150
600VAC / 3 $Pole_A$	7 1/2	20	15	50	30	75	60	150	125	200

1 = Max HP w/time delay Class J Fuses
2 = Max HP w/non-time delay Class J Fuses

① The factory installed optional neutral lug is 100% for sizes 30 – 200A and 200% for size 400A. The field installed 200% neutral lug accessory is available for only sizes 200 and 400A.

Two layers of protection. One seamless solution.

Overview

This Heavy-Duty Fusible Safety Switch combines the robust overcurrent and short circuit protection of a traditional fusible safety switch with the added layer of surge protection. In addition to interrupting excessive current flow due to overloads and short circuits, it mitigates failures due to external surges, lightning strikes, and utility switching events. The surge protection device (SPD) is designed to intercept and neutralize these destructive surges before they reach your critical infrastructure.

Engineered for demanding industrial and commercial environments, this integrated solution offers reliable circuit protection and advanced surge mitigation. Whether you're upgrading existing infrastructure or designing a new system, this solution delivers unmatched protection and value in one compact, easy-to-install unit.



Catalog number system

The following catalog numbering system defines a Heavy-Duty Switch with Surge Protection construction.

HF	1	6	1	C	N	J

Heavy Duty Fusible Switch

Ampere rating

1 = 30 A
2 = 60 A
3 = 100 A
4 = 200 A
5 = 400A

Maximum Voltage 600 VAC

System Voltage

1 = 480
2 = 208
3 = 240
4 = 600

Integrated Surge Protection

Neutral

(blank) = Not included
N = Included

Enclosure

J = NEMA Type 1/3R/12

Heavy Duty Switches with Surge Protection

Features

Typical applications
- Industrial Facilities
- Commercial Buildings
- Data Centers
- Healthcare Institutions
- Educational Campuses
- Utility Infrastructure

Standard features
- 30-400 A, 600 VAC, 3-phase
- Molded case switch (MCS)
- Class J fuse base (fuses not included)
- Integrated surge protection device (TPS4 03) with current rating of 50kA per phase. Externally viewable though window in enclosure door
- Control circuit terminal strip
- Ground lug
- NEMA Type 1/3R/12 enclosure
- 200 kA RMS assembly short-circuit current rating

Optional features
- Isolated 100% neutral lug①

Accessories
- Alternate lugs and copper lugs for MCS and fuse base
- Isolated 200% neutral lug①
- Isolated ground lug
- Shunt trip for MCS
- Auxiliary switches, alarm switches, & undervoltage release for MCS
- Line side terminal cover for MCS
- 3SU1 Pilot devices
- TPS4 09 SPD with increased surge current rating of 130kA per phase

Standards and certifications
- UL 98 Enclosed and Dead Front Switch
- UL Listed

UL_A / NEC_B Listed Horsepower Ratings

	30A		60A		100A		200A		400A	
Voltage / Poles	Std[2]	Max[1]	Std[2]	Max[1]	Std[2]	Max[1]	Std[2]	Max[1]	Std[2]	Max[1]
208VAC / 3 $Pole_B$	2	5	5	10	10	15	20	40	40	75
240VAC / 3 $Pole_A$	2	7 1/2	7 1/2	15	15	30	25	60	50	75
480VAC / 3 $Pole_A$	5	15	15	30	25	60	50	125	100	150
600VAC / 3 $Pole_A$	7 1/2	20	15	50	30	75	60	150	125	200

1 = Max HP w/time delay Class J Fuses
2 = Max HP w/non-time delay Class J Fuses

① The factory installed optional neutral lug is 100% for sizes 30 – 200A and 200% for size 400A.
The field installed 200% neutral lug accessory is available for only sizes 200 and 400A.

Type VBII 4 & 6-Pole Heavy Duty Safety Switches

Selection

Application

4 & 6-pole Switches are commonly used as a disconnecting means for two-speed, two-winding motors. Fused switches provide both over current and short circuit protection. Non-fusible switches normally provide a local disconnection means for two-speed motors which are remote from their motor controller. 4-pole switches are also used in 3-phase, 4-wire circuits when a switching neutral is required. All 4 & 6-pole switches are service entrance rated.

Description

4 & 6-pole switches are available in 30-200A ratings and in both fusible and non-fusible versions. 4-pole switches are supplied with either Type 1 or Type12/3R enclosures.
6-pole switches are available with either Type 12/3R or Type 4X stainless steel enclosures.

Standards

- UL & CUL listed under file #E4776
- Meets UL98 for enclosed switches
- 4 & 6-Pole switches are suitable for use as service entrance
- Meets NEMA Standard KS-1 for enclosed switches
- Meets NEC wire bending space requirements

Features

- Visible blade, double break switching action
- Highly visible ON/OFF indication
- Defeatable dual cover interlock
- Padlock option in OFF position
- All copper current carrying parts①
- Tangenital knockouts (Type 1, 4-pole switches)



HNF662J

4-Pole Type VBII Switches①②

System	Amp Rating	Indoor Type 1 Catalog Number	Indoor Type 1 Ship Wt. (lbs.)	Type 12/3R Industrial⑤ Catalog Number	Type 12/3R Industrial⑤ Ship Wt. (lbs.)	Horsepower Ratings③ 240V, 2Ø, 4W Std.	240V, 2Ø, 4W Max.	240V 3Ø Std.	240V 3Ø Max.	480V, 3Ø Std.	480V, 3Ø Max.	600V, 3Ø Std.	600V, 3Ø Max.	250V DC
Fusible 600 Volt AC, 250 Volt DC — 4-Pole, 4 Fuse④														
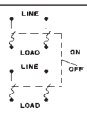	30	**HF461**	36	**HF461J**	36	3	10	3	7½	5	15	7½	20	5
	60	**HF462**	40	**HF462J**	40	7½	20	7½	15	15	30	15	50	10
	100	**HF463**	43	**HF463J**	43	15	30	15	30	25	60	30	75	20
	200	**HF464■**	88	**HF464J■**	88	25	50	25	60	50	125	60	150	40
Non-fusible 600 Volt AC, 250 Volt DC — 4-Pole														
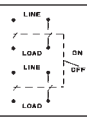	30	**HNF461**	32	**HNF461J**	32	—	10	—	10	—	20	—	30	5
	60	**HNF462**	34	**HNF462J**	34	—	20	—	20	—	50	—	60	10
	100	**HNF463■**	36	**HNF463J■**	36	—	30	—	40	—	75	—	100	20
	200	**HNF464■**	78	**HNF464J■**	78	—	50	—	60	—	125	—	150	4

6-Pole Type VBII Switches①②⑤

System	Amp Rating	Type 12/3R Industrial Catalog Number	Type 12/3R Industrial Ship Wt. (lbs.)	Type 4X Stainless Steel Catalog Number	Type 4X Stainless Steel Ship Wt. (lbs.)	Horsepower Ratings③ 240V 3Ø Std.	240V 3Ø Max.	480V, 3Ø Std.	480V, 3Ø Max.	600V, 3Ø Std.	600V, 3Ø Max.	250V DC
Fusible 600 Volt AC, 250 Volt DC — 6-Pole, 6 Fuse④												
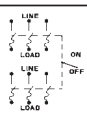	30	**HF661J**	37	**HF661S■**	37	3	7½	5	15	7½	20	5
	60	**HF662J**	41	**HF662S■**	41	7½	15	15	30	15	50	10
	100	**HF663J■**	44	**HF663S■**	44	15	30	25	60	30	75	20
	200	**HF664J■**	90	**HF664S■**	90	25	60	50	125	60	150	40
Non-fusible 600 Volt AC, 250 Volt DC — 6-Pole												
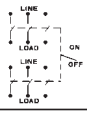	30	**HNF661J**	33	**HNF661S**	33	—	10	—	20	—	30	5
	60	**HNF662J**	35	**HNF662S**	35	—	20	—	50	—	60	10
	100	**HNF663J**	37	**HNF663S**	37	—	40	—	75	—	100	20
	200	**HNF664J**	80	**HNF664S■**	80	—	60	—	125	—	150	40

■ Built to order. Allow 3-5 weeks for delivery.

① Lugs are aluminum alloy as standard. Optional copper body lugs are available.

② All 4 & 6-pole VBII switches are suitable for use as service equipment when a neutral is installed or equipment ground kit is properly connected.

③ Dual horsepower ratings: Std. – applies when non-time-delay fuses are installed. Max. – applies when time delay fuses are installed.

④ Fusible switches accept Class H Fuses as the standard. Class R & J fuses can also be installed and increase the rating from 10,000 to 200,000 AIC. For Class J, the load base is moved upward. For Class R fuses, rejection kits are required.

⑤ Supplied with factory installed ground lugs.

Special Application Safety Switches

Interlocked Receptacle Switches

Application

Receptacle Safety Switches provide cord connection protection of heavy-duty portable equipment (welders, infrared ovens, batch feeders, portable conveyors, assembly line fixtures and tools, refrigerator trucks, etc.) under load or fault conditions.

Standards

All receptacle switches are UL listed under file #E4776. Those with a viewing window are also CSA certified under file #1079316.

Description①②

Type 12 and 4/4X Receptacle Safety Switches are available with 3-phase, 4-wire grounded type Crouse-Hinds Arkite™ 2 or Pyle-National receptacle, pre-wired and mounted with interlock linkage to the switch mechanism. Insertion or removal of the plug is prevented by the interlock linkage while the switch is in the "ON" position. Receptacle prevents operation of switch if incorrect plug is inserted.



HF362JCH

Crouse-Hinds Interlocked Receptacle Switches

Ampere Rating④	Type 12⑤ Catalog Number	Type 4/4X⑥ Catalog Number	Shipping Wt. (lbs.) Std. Pkg.	Accepts Crouse-Hinds Arktitea Plug Catalog Number
240V Fusible, 3-Pole, 3-Wire				
30	**HF321JCH**	—	23	APJ3485 & NPJ3485
60	**HF322JCH**	—	30	APJ6485 & NPJ6485
100	**HF323JCH**	**HF323SCH▲**	36	APJ10487 & NPJ10487
600V Fusible, 3-Pole, 3-Wire				
30	**HF361JCH**	**HF361SCH**	24	APJ3485 & NPJ3485
60	**HF362JCH**	**HF362SCH**	30	APJ6485 & NPJ6485
100	**HF363JCH**	**HF363SCH▲**	36	APJ10487 & NPJ10487
600V Non-Fusible, 3-Pole, 3-Wire				
30	**HNF361JCH▲**	**HNF361SCH▲**	22	APJ3485 & NPJ3485
60	**HNF362JCH**	**HNF362SCH**	29	APJ6485 & NPJ6485
100	**HNF363JCH▲**	**HNF363SCH▲**	35	APJ10487 & NPJ10487
600V Fusible, 3-Pole, 3-Wire with Viewing Window				
30	**HF361JCHW▲**	**HF361SCHW▲**	24	APJ3485 & NPJ3485
60	**HF362JCHW**	**HF362SCHW**	30	APJ6485 & NPJ6485
100	**HF363JCHW▲**	**HF363SCHW▲**	36	APJ10487 & NPJ10487
600V Non-Fusible, 3-Pole, 3-Wire with Viewing Window				
30	**HNF361JCHW▲**	**HNF361SCHW▲**	22	APJ3485 & NPJ3485
60	**HNF362JCHW**	**HNF362SCHW▲**	29	APJ6485 & NPJ6485
100	**HNF363JCHW▲**	**HNF363SCHW▲**	35	APJ10487 & NPJ10487

Pyle-National Interlocked Receptacle Switches 3-Poles Fusible and Non-Fusible

Ampere Rating		Voltage Rating	Type 12 Catalog Number⑤	Shipping Wt. (lbs.) Std. Pkg.	Accepts Pyle-National QuelArc™②③ Plugs
Switch	Receptacle				Plug Catalog Number
30	30	600 (F)	**HF361JPN▲**	23	**JPD-83046**
		600 (N-F)	**HNF361JPN**	21	
60	60	600 (F)	**HF362JPN▲**	28	**JPD-116046**
		600 (N-F)	**HNF362JPN**	27	

▲ Built to order. Allow 6–8 weeks for delivery.

① Arktite™ is a registered trademark of the Crouse-Hinds Company. Plugs are not sold or supplied by Siemens.

② Indicates plug with maximum diameter cable bushing.

③ QuelArc™ is a registered trademark of the Pyle-National Company.

④ Ampere rating of both switch and receptacle.

⑤ Also rated Type 3R/3S.

⑥ Enclosure is constructed of Type 304 stainless steel.

Special Application Safety Switches

Type VBII Non-Metallic & 316 Grade Stainless Steel

Application

Siemens Non-metallic switches provide a superior level of corrosion resistance to assure trouble free performance in the most severe conditions. Our non-metallic enclosures are constructed from fiberglass reinforced polyester and are extremely resistant to a wide range of corrosive atmospheres. They allow a wide range of operating temperatures and their insulating properties virtually eliminate problems caused by internal condensation.

Description

30-200A, 600V Max, fusible and non-fusible switches are available in non-metallic enclosures. All are supplied with factory installed ground bars as standard.



Type 4/4X Non-Metallic

Ampere Rating	Catalog Number	Ship Weight Std. pkg. (lbs.)	Horsepower Rating—3-Phase						250 Volts DC	600 Volts DC
			240 Volt AC		480 Volt AC		600 Volt AC			
			Std.	Max.	Std.	Max.	Std.	Max.		
3-Pole, 4-Wire, 240 Volt Fusible, Type 4X⑤										
30	**HF321NX**	21	3	7½	—	—	—	—	5	—
60	**HF322NX▲**	22	7½	15	—	—	—	—	10	—
3-Pole, 4-Wire, 600 Volt AC Fusible, Type 4X②③⑤										
30	**HF361NX**	21	3	7½	5	15	7½	20	5	15④
60	**HF362NX**	22	7½	15	15	30	15	50	10	30④
100	**HF363NX▲①**	39	15	30	25	60	30	75	20	50④
200	**HF364NX▲①**	83	25	60	50	125	60	150	40	50
3-Pole, 3-Wire, 600 AC Volt Non-Fusible,① Type 4X②③										
30	**HNF361X**	20	—	7½	—	20	—	30	5	15④
60	**HNF362X**	20	—	15	—	50	—	60	10	30④
100	**HNF363X▲**	38	—	30	—	75	—	100	20	50④
200	**HNF364X▲**	81	—	60	—	125	—	150	40	50

▲ Built to order. Allow 6–8 weeks for delivery.

① Also used for 240 volt applications.

② Add "L" to end of catalog number for switches less line & load lugs with mounting hardware for crimp type or copper body lugs.

③ 200A switches are also rated 600V DC max.

④ 600V DC voltage and horsepower rating shown requires (2) poles to be connected in series.

⑤ Supplied with factory installed neutral.

Enclosed Solar Photovoltaic (PV) Switches

Application

Solar disconnect switches are designed to be used in the DC portion of photovoltaic power generation circuits. They incorporate powerful magnets within the switch line base which work in combination with a double break switching action to quickly dissipate the very hot arc that is generated when a 600V DC circuit is opened under load. These circuits are defined by article 690 of the NEC which requires the grounded conductor to be at ground potential at all times and therefore cannot be switched.

Description

30-200A switches are available in both Type 1 and 3R enclosures and in both fusible and non–fusible versions. They are provided with an additional door mounted warning label as required by the NEC and are supplied with a factory installed equipment ground bar. They are built to UL98 requirements but are UL listed in file number E335018 as UL1741 photovoltaic disconnect switches. They are 3 pole switches that are approved to switch 3 separate 600V DC circuits (one per pole). The design incorporates many of the standard VBII switch features including a rolled out enclosure front flange, a large metal operating handle, oversized line and load lugs and large wire gutters. 1000VDC photovoltaic switches are UL98B listed for solar applications and comply with article 690 of the NEC. The new 400-600Amp switches are also UL98B listed at 600VDC and come in NEMA Type 3R.

Solar Photovoltaic Enclosed Disconnect Switches

Ampere Rating	Indoor – Type 1 Catalog Number	Indoor – Type 1 Ship Wt* Std. Pkg.	Outdoor – Type 3R Catalog Number	Outdoor – Type 3R Ship Wt* Std. Pkg.	Rated Isc Per NEC Article 690
Negative Ground 3 Pole 3 Wire Fusible 600Volt DC					
30	HF361PV	14	HF361RPV	15	19.2 A
60	HF362PV	20	HF362RPV	21	38.4 A
100	HF363PV▲	25	HF363RPV	26	64.0 A
200	HF364PV▲	49	HF364RPV	50	128.0 A
Negative Ground 3 Pole 3 Wire Non-Fusible 600Volt DC					
30	HNF361PV	12	HNF361RPV	13	24.0 A
60	HNF362PV	19	HNF362RPV	20	48.0 A
100	HNF363PV▲	24	HNF363RPV	25	80.0 A
200	HNF364PV▲	47	HNF364RPV	48	160.0 A
Positive and Negative Ground, 1 Pole, Fusible 1000 Volt DC					
200	HF1104NPV▲	52	HF1104NRPV▲	53	128.0A
Positive and Negative Ground, 1 Pole, Non-Fusible 1000 Volt DC					
200	HNF1104NPV▲	50	HNF1104NRPV▲	51	160.0A
Positive Ground 3 Pole 3 Wire Fusible 600Volt DC					
30	HF361PVPG	14	HF361RPVPG	15	19.2 A
60	HF362PVPG▲	20	HF362RPVPG	21	38.4 A
100	HF363PVPG▲	25	HF363RPVPG▲	26	64.0 A
200	HF364PVPG▲	49	HF364RPVPG▲	50	128.0 A
Positive Ground 3 Pole 3 Wire Non-Fusible 600Volt DC					
30	HNF361PVPG	12	HNF361RPVPG	13	24.0 A
60	HNF362PVPG▲	19	HNF362RPVPG	20	48.0 A
100	HNF363PVPG▲	24	HNF363RPVPG▲	25	80.0 A
200	HNF364PVPG▲	47	HNF364RPVPG▲	48	160.0 A

Amperage Rating	No. Poles	Fuse Type	Catalog Number	Ship Wt* Std. Pkg	Rated Isc Per NEC Article 690
Positive and Negative Ground, 2 Wire, 600Volt DC, Type 3R					
400A	1	Fusible	HF165NRPV▲	165	256A
400A	1	Non-fusible	HNF165NRPV▲	127	256A
600A	1	Fusible	HF166NRPV▲	167	384A
600A	1	Non-fusible	HNF166NRPV▲	129	384A



HF361PV



HNF361RPV



HF362RPV

▲ Built to order. Allow 6–8 weeks for delivery.

* In pounds (lbs)

Note: All disconnects are rated at 10,000 AIC per UL requirements when used with or protected by Class K, J or R fuses rated at 600VDC.

Description

Double throw switches are intended to transfer loads from one power source to another. All 2 & 3-pole double throw switches are suitable for use as service equipment including non-fusible versions when used in combination with a UL listed circuit breaker or fusible switch. All are UL Listed and both horsepower and load break rated. Switches are rated for use on systems up to 10,000A when protected with Class H fuses or 100,000A when protected with Class R or Class T fuses②. They can also be used to connect a single source of power to either of two loads. In this application it is necessary to field modify fusible switches so that the fuses are on the load side of the switching mechanism.

A cover interlock is provided on all ampere ratings. The operating handle may be padlocked in the off position.

Fuse Capabilities of Fusible DTF Switches

Amp Rating	Fuse Type			
	H	R	T	J
30 & 60A, 240V	Std	Yes (kit)	No	No
30 & 60A, 600V	Std	Yes (kit)	No	Yes③
100 & 200A	Std	Yes (kit)	Yes (kit)	Yes③
400 & 600A (DTF)	No	No	Yes③	Std

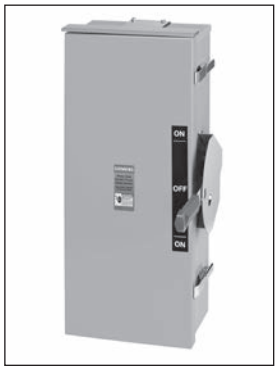

Double Throw Switches

System	Voltage	Number of Poles	Amps	Type 1 — Indoor Catalog Number	Type 3R — Outdoor① Catalog Number	Type 12/3R — Industrial Catalog Number	Type 4X — Stainless Steel Catalog Number
Heavy Duty Fusible (30-200A) with Class H fuse spacings —Less Neutral②							
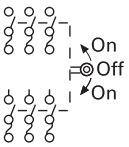	240 Volt AC or 250 Volt DC	2	200	DTF224▲	DTF224R	—	—
		3	30	DTF321	DTF321R▲	—	—
			60	DTF322	DTF322R▲	—	—
			100	DTF323▲	DTF323R	—	—
			200	DTF324	DTF324R	—	—
			400	DTF325	FR325DTK⑥▲	—	—
			600	DTF326▲	FR326DTK④▲	—	—
	600 Volt AC, 250 Volt DC	3	30	DTF361	—	—	—
			60	DTF362▲	—	—	—
			100	DTF363	DTF363R	—	F353SSDTK⑥▲
			200	DTF364	DTF364R	—	F354SSDTK⑥▲
			400	DTF365	FR355DTK④▲	—	F355SSDTK④▲
Heavy Duty Non-Fusible —Less Neutral②							
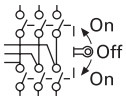	240 Volt AC or 250 Volt DC	2	30	DTNF221	—	—	—
			60	DTNF222	—	—	—
			100	DTNF223	—	—	—
			200	DTNF224	DTNF224R	—	—
			400	DTNF225	DTNF225R	—	—
		3	30	DTNF321	—	—	—
			60	DTNF322	—	—	—
			100	DTNF323	DTNF323R	—	—
			200	DTNF324	DTNF324R	—	—
			400	DTNF325	—	—	—
			600	DTNF326	—	—	—
			800	DTNF327▲	—	—	—
	600 Volt AC, or 250 Volt DC	3	30	DTNF361	DTNF361R	DTNF361J	DTNF361S
			60	DTNF362	DTNF362R	DTNF362J	DTNF362S
			100	DTNF363	DTNF363R	DTNF363J	DTNF363S
			200	DTNF364	DTNF364R	DTNF364J▲	DTNF364S
			400	DTNF365	DTNF365R	NF355HDTK	NF355SSDTK
			600	DTNF366	DTNF366R	—	—
			800	DTNF367	DTNF367R	—	—
			1200	DTNF368▲	DTNF368R	—	—
		4⑤	30	—	NFR451DTK▲	—	—
			60	—	NFR452DTK▲	—	—
			100	—	NFR453DTK▲	—	—
			200	NF454DTK	NFR454DTK▲	—	NF454SSDTK▲
			400	NF455DTK▲	NFR455DTK▲	—	—
			600	NF456DTK▲	NFR456DTK▲	—	—
			800	NF457DTK▲	NFR457DTK▲	—	—
General Duty Non-Fusible				Type 3R — Outdoor① Less Neutral	Type 3R — Outdoor① With Neutral	Type 3R — Outdoor General Duty With Neutral⑦	
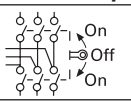	240 Volt AC	2	100	DTGNF223R	DTGNF223NR	DTLNF213NR	—
			200	DTGNF224R	DTGNF224NR	—	—
		3	100	DTGNF323R	DTGNF323NR	—	—
			200	DTGNF324R	DTGNF324NR	—	—

▲ Built to order. Allow 3–4 weeks for delivery.

① Use HS Type hubs for 30–200A switches. 400A and larger switches do not have hub provisions.

② All Heavy Duty double throw switches with a catalog number starting with "DT" are rated 200,000 AIC max. when protected by Class R, J or T fuses. Fuse ampere rating must not exceed switch ampere rating.

③ Move load base.

④ Will accept class T Fuses only.

⑤ 4-pole switches are not approved for service entrance.

⑥ Will accept class H fuses only.

⑦ General duty Stand-by Power Panel catalog number DTLNF213NR contains (2) 100A, 2P circuit breakers rated 120/240V AC & 10,000 AIC.

Accessories, Lug Data and Horsepower Ratings

Accessories – 2 and 3-Pole Switches Type "DT" Only①

Description		Catalog Number
Neutral Kits	30A 60 & 100A 200A 400 & 600A 800 & 1200A	HNC612 HN263 HNC264 HN678 HND678
Equipment Ground Kit	30-200A (2) #14-4 AWG 400 & 600A (4) #14-2/0 800-1200A (8) #6-350 Kcmil	HG61234 HG656 HG678
Auxiliary Contacts (HD only) (two required per switch)④	30-200A with (1) NO & (1) NC contact 30-200A with (2) NO & (2) NC contacts 400-1200A with (1) NO & (1) NC contact 400-1200A with (2) NO & (2) NC contacts	HA161234 HA261234 HA165678 HA265678
Class R Fuse Clip Kits (two required per switch)	30A, 240V Kit 30A, 600V Kit/60A, 240V Kit 60A, 600V Kit 100A Kit 200A Kit	HR21 HR612 HR62 HR63 HR64
Class T Fuse Adapter Kits (two required per pole)	100A, 240V Kit 100A, 600V Kit 200A, 240V Kit 200A, 600V Kit	HT23 HT63 HT24 HT64
Type 3R Hubs (30-200A)	For ¾" Conduit For 1" Conduit For 1 ¼" Conduit For 1 ½" Conduit For 2" Conduit For 2 ½" Conduit	ECHS075 ECHS100 ECHS125 ECHS150 ECHS200 ECHS250

Accessories – 4-Pole and Type "F" & "NF" 3-Pole Switches Only②

Description		Catalog Number
Auxiliary Switch (two required per switch)	30-800A (1) NO, (1) NC④ (2) NO, (2) NC④	DS200EK1 DS200EK2
Ground Lug Kit③	30-60-100A 200A 400-600-800A	DS100GK DS200GK DS468GK
Hubs	30-60-100A Use Type HR Hubs 200-400A Use Type SSH 4, 4X Hubs 600-800A Use Type SSH 4, 4X Hubs	
Neutrals (3-pole only)	30-60-100A 200A 400 & 600A Fusible 400A 3P Non-Fusible	DT100NK DT200NK DS800NK DT600NK

Maximum Horsepower Ratings

Fused

Ampere Rating	1-Phase AC	3-Phase AC			250V DC
	240V	240V	480V	600V	
30	3	7½	15	20	5
60	10	15	30	50	10
100	15	30	60	75	20
200	15	60	125	150	40
400	—	125	125	125	50
600	—	125	—	—	50

Non-Fused

30	5	10	20	30	5
60	10	20	50	60	10
100	15	40	75	100	20
200	15	60	125	150	40
400-800	—	125	250	350	50

Wire Ranges (Line, Load and Neutral) per NEC Requirements

30-200A – 2, 3 & 4-Pole Switches

Switch Ampere Rating	Wire Range (Cu/Al) New VBII Design Line, Load and Neutral
30	(1) #14–6
60	(1) #14–2
100	(1) #14–1/0 AWG
100	(1) #14–1/0 AWG
200	(1) #6–250 kcmil

400-1200A – 2 & 3-Pole Switches

Switch Ampere Rating	Wire Range (Cu/Al) New VBII Design Line, Load and Neutral
400	(1) 1/0 AWG–750 kcmil or (2) 1/0 AWG–250 kcmil
600	(2) 1/0 AWG–500 kcmil
800	(2) 1/0 AWG–750 kcmil or (3) 1/0 AWG–500 kcmil
1200	(3) 1/0 AWG–600 kcmil or (4) 1/0 AWG–500 kcmil

400-800A – 4-Pole switches

Switch Ampere Rating	Wire Range (Cu/Al) New VBII Design Line, Load and Neutral
400	(2) 1/0 AWG–300 kcmil or (1) 1/0 AWG–750 kcmil
600	(2) 250-500 Kcmil
800	(3) 250-500 Kcmil

Replacement Parts – 2 and 3-Pole Switches Only①

Description		Catalog Number
Type 1, 3R & 12 Replacement Handle	30-200A	HHD61234
Type 4X Replacement Handle	30-200A	HHD61234S
Replacement Handle	400-1200A	HHD656

▲ Built to order. Allow 6–8 weeks for delivery.

① For "DT" VBII Type switches only.
② Also for fusible stainless & 400A Type 12 & 4x switches.
③ The following ground lugs are provided as standard in 200A and larger switches 200-(1) #14-4 Cu/Al 400-800A-(3) #6-250MCM Cu/Al.
④ One aux. required for normal and one required for emergency switch line base.



HR612

Class R Fuse Clip Kits

All General Duty and Heavy Duty Switches are field convertible to accept Class R Fuse Clip Kits. The kits prevent the installation of Class H and K fuses (one kit required per 3-pole switch).

Class R Fuse Clip Kits

Catalog Number	Description
HR21A	30A, 240V Kit (GD only)
HR21	30A, 240V Kit (HD only)
HR612	30A, 600V Kit
HR22A	60A 240V Kit (GD only)
HR62	60A, 600V Kit
HR63	100A Kit
HR64	200A Kit
HR656A	400A Kit
HR656A	600A Kit

Class J Fusing

All 30-600A, 600V and 100-600A,240V fusible Heavy Duty Switches are field convertible to accept Class J fuses by moving the load base to a pre-drilled J fuse position. All 100-600A fusible General Duty switches can also be field converted to accept Class J fuses. ***Note:*** Only 600A switches require an adapter kit to be field converted to Class J.

Class J Fuse Kits

Catalog Number	Description
HJ66A	600A, 240V/600V Kit



HT63

Class T Fuse Adapter Kits

All 100-1200A Switches are field convertible to accept Class T fuses. 800A switch can accept class T without adapter kit

Class T Fuse Adapter Kits①

Catalog Number	Description
HT23	100A, 240V Kit
HT63	100A, 600V Kit
HT24	200A, 240V Kit
HT64▲	200A, 600V Kit
HT25A	400A, 240V Kit
HT65A	400A, 600V Kit
HT26A	600A, 240V Kit
HT66A	600A, 600V Kit
No kit required	800A, 240V
No kit required	800A, 600V
TFAK82	1200A, 240V Kit

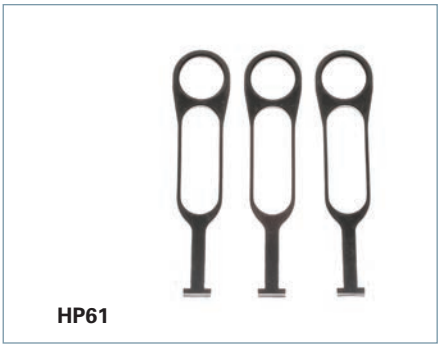

HP61

Fuse Puller Kits

Fuse Puller Kits are field installable in 30-100A Type VBII Heavy Duty Switches (one kit required per 3-pole switch).

Fuse Puller Kits

Switch Ampere Rating	Fuse Puller Kit Catalog Number
30	**HP61**
60	**HP62▲**
100	**HP63▲**

▲ Built to order. Allow 6–8 weeks for delivery.
① One kit per pole required.

Full Coverage Shielding

Kits provide a clear plastic inner shield to prevent contact with any internal switch parts. The shield covers the complete opening of the switch. Fuses can be accessed via a shield-integrated hinged door.

Full Coverage Shielding①

Switch Ampere Rating	Kit Catalog Number	Coverage	Qty to Order Per Switch
30A HD Fusible	**HSK61SSW**	Full	1
60A HD	**HSK62SSW**	Full	1
100A HD	**HSK63SSW**	Full	1
200A HD②	**HSK64SSW**	Full	1

Service Entrance Compliant Internal Barriers

All HD and 400A, 600A GD come with line side shielding from the factory to reduce chance of incidental contact with live parts. When switches are utilized as a service entrance, additional internal shielding is required by the latest UL 98 standard and to meet NEC 230.62. These barriers are field installable.

Internal Line side barrier kits

Switch Ampere Rating	Kit Catalog Number	Coverage	Qty to Order Per Switch
30-60A GD Non-fusible	**HSK212BA**	Line Side	1
30A GD Fusible	**HSK21BA**	Line Side	1
60A GD Fusible	**HSK22BA**	Line Side	1
100A GD	**HSK23B**	Line Side	1
200A GD	**HSK24B**	Line Side	1
30A HD	**HSK61B**	Line Side	1
60-100A HD	**HSK623B**	Line Side	1
200A HD	**HSK64B**	Line Side	1
400-600A HD/GD	**HSK656BA**	Line Side	1
800A HD	**HSK67B**	Line Side	Per Pole
1200A HD	**HSK68B**	Line Side	Per Pole



HN264

200% Neutral Kits

UL listed 200% Neutrals are available on 100-600A Heavy Duty Switches. They are typically used with non-linear transformers or where increased neutral ampacity/lug capacity is required.

200% Neutral Kits

Switch Ampere Rating	Kit Catalog Number	Wire Range Line & Load Lugs (Cu/Al)
100	**HN263**	(2) #14-1/0 AWG
200	**HN264**	(2) #6 AWG-300 Kcmil
400	**HN656A**	(2) 1/0 AWG-600 Kcmil (2) #6 AWG-300 Kcmil
600	**HN678A**	(4) 1/0 AWG - 600 Kcmil (2) #6 AWG - 300 Kcmil



HN612

Neutral Kits

Standard Neutral Kits can be field installed in General and Heavy Duty Switches.

Neutral Kits

Switch Ampere Rating	Kit Catalog Number
30 GD	n/a
30 HD	**HN612**
60 GD	**HN22A**
60, 100 HD, 100 GD	**HN623**
200	**HN64**
400 & 600	**HN656A**
800 & 1200	**HN678**

▲ Built to order. Allow 6–8 weeks for delivery.

① Not designed for use in Non-metallic 4X safety switches. Not designed for use with Auxiliary Contacts.

② HSK64SSW is designed exclusively for 200A heavy-duty fusible switches with a standard size enclosure and 200A heavy-duty non-fusible switches with an over-sized enclosure. HSK64SSW is not suited for any other configurations.



HA261234



HA265678



HLC612



HG261234

Auxiliary Contacts

Auxiliary Contacts are available only for Heavy Duty Switches. The auxiliary contacts are available in 1 normally open and 1 normally closed or 2 normally open and 2 normally closed configurations. Siemens offers a PLC Auxiliary Switch (30-600A) that has very low resistance for low voltage and current typical in PLC circuits. All auxiliary contacts make after and break before main switch contacts.

Auxiliary Contacts①

Switch Ampere	Aux. Switch Catalog Number	Kit Ampere Rating			Horsepower Rating	
		125V AC Max.	250V AC Max.	28V DC Max.	125V AC Max.	250V AC Max.
With 1 NO & 1 NC Isolated Contacts						
30-600	**HA161234**	10	10	7	1/2	3/4
800-1200	**HA165678**	10	10	—	1/2	3/4
With 2 NO & 2 NC Isolated Contacts						
30-600	**HA261234**	10	10	7	1/2	3/4
800-1200	**HA265678**	10	10	7	1/2	3/4
Low Current PLC Type with 1 NO & 1 NC Gold Plated Contacts						
30-600	**HA361234**	10	10	7	1/2	3/4
800-1200	**HA365678**	10	10	—	1/2	3/4

Copper Lug Kits

Heavy duty switches are UL approved to accept field installed copper lug kits.

Copper Lug Kits

Switch Ampere Rating	Copper Lug Catalog Number	Description
30–60	**HLC612**	(9) Lugs/Kit #14-4 AWG Cu
100	**HLC63▲**	(9) Lugs/Kit #14-1/0 AWG Cu
200	**HLC64▲**	(9) Lugs/Kit #6 AWG-300 Kcmil Cu
400-600	**HCU656A■**	(1) Lugs/Kit #1/0 AWG-600 Kcmil Cu
800–1200	**HLC65678**	(1) Lugs/Kit #1/0 AWG-600 Kcmil Cu

▲ Built to order. Allow 6–8 weeks for delivery.

■ Purchase field replacement kit along with lugs.

① Series A 400A and 600A switches use HA161234, HA261234 or HA361234 auxiliary contacts. Earlier 400A and 600A switches use HA165678, HA265678 or HA365678 auxiliary contacts.

Quick Connects

They provide two point control power take-off capability and are normally used on two poles on the line side when it is required to have control power available when the switch is in the OFF position. They provide a mounting provision for standard ¼" quick connect terminal. Installed in the line or load side. 30A VBII switches have lugs UL listed to accept (2) wires per pole as standard so a 30A kit is not required.

Quick Connects

Catalog Number	Description
HCQ62	60A 2 wire quick connect kit
HCQ63	100A 2 wire quick connect kit
HCQ64	200A 2 wire quick connect kit

Isolated Ground Kits

Isolated Ground Kits are available on 30-600A Heavy Duty Switches. They are normally used on circuits with a high content of computer or other electronic loading which require a ground which is isolated from the building ground and neutral circuits. The kit includes both isolated and grounded terminals as listed below.

Isolated Ground Kits

Switch Ampere Rating	Catalog Number	Number of Terminals		Wire Range Per Terminal (Cu/Al)
		Isolated	Grounded	
30–200	**HG261234**	2	2	#14-4 AWG
400–600	**HG2656A**	4	4	2/0-14 AWG 2/0-6 AWG

Equipment Ground Kits

Equipment Ground Lug Kits are available for all General and Heavy Duty Switches. They are field installable in Type 1 and Type 3R Switches and are factory installed as standard in Type 4 / 4X and Type 12 and also in all VBII 4&6-pole Switches.

Equipment Ground Kits

Switch Ampere Rating	Catalog Number	Number of Terminals	Wire Range Per Terminal (Cu/Al)
30–200 GD	**HG61234**	2	#14-4 AWG
30–200 HD	**HG61234**	2	#14-4 AWG
400 & 600	**HG656A**	4	2/0-6 AWG
800–1200	**HG678**	8	#6 AWG-250 Kcmil

Interchangeable Hubs

Conduit hubs are available for Type 3R, 12 and 4 / 4X applications. 30-200A Type 3R Switches are provided with a conduit hub provision and a removable hub plate on their top rainshed.

Conduit Size (inches)	Catalog Number	Used On
Type 3R①		
Cover	**ECHA000**	30–60A GD Only
3/4	**ECHA075**	
1	**ECHA100**	
1 1/4	**ECHA125**	
Cover	**ECHS000**	100–200A GD 30–200A HD
3/4	**ECHS075**	
1	**ECHS100**	
1 1/4	**ECHS125**	
1 1/2	**ECHS150**	
2	**ECHS200**	
2 1/2	**ECHS250**	
2 1/2	**ECHV250**	400–1200A②
3	**ECHV300**	
3 1/2	**ECHV350**	
4	**ECHV400**	
Type 4/4X③		
3/4	**SSH075**	30–200A
1	**SSH100**	
1 1/4	**SSH125**	
1 1/2	**SSH150**	
2	**SSH200**	

Note: 30 thru 200A. Type 3R Switches have removable hub plates on rainshed. 400A and larger Type 3R Switches have no provisions for mounting hubs. Drill or punch hole in the field to accommodate hub size desired.

Field Replacement Kits and Neutral Barrier Kits

All Heavy Duty Switches are field convertible for (Crimp) type lugs. When compression lugs are required for 30-100A switches, a neutral barrier kit is required for 1-Phase, 3W or 3-Phase, 4W applications. When compression lugs are required on 400-1200A switches, lug mounting kits are required.

Field Replacement Kits and Neutral Barrier Kits

Switch Ampere Rating	Catalog Number	Kit Description
30	**HCL612**	Neutral Barrier Kit
60 & 100	**HCL623**	Neutral Barrier Kit
400	**HCM65A**	240V/600V Fusible Kit
400	**HNCM65A**	240/600V Non-Fusible Kit
600	**HCM66A**	240V/600V Fusible Kit
600	**HNCM66A**	240V/600V Non-Fusible Kit
800④	**HCL65678■**	1 Pole, Compression Lug Mounting Kit

Lugs

30 & 60A HD Switches are suitable for use with 60° or 75°C wire. 100-1200A are suitable for use with 75°C rated wire.

Multiple Padlock Accessory

A tamper-proof device to provide for multiple padlocking to meet OSHA or plant requirements. Accepts up to 6 1/4" padlocks. Catalog number **SL0420**. Standard Carton-12.



SSH125



ECHV300



ECHS200



SL0420

■ Built to order. Allow 3-4 weeks for delivery.

① Hubs suitable for 3R Switches.
② 400-1200A require an additional Hub Gasket Kit with use of a Hub. Catalog number HVGK is a suitable gasket kit for this.
③ Also suitable for Type 12 applications.
④ Provides mounting for (2) compression lugs per phase on line or load.

Safety Switch Dimensions (Inches)* & Shipping Weights

Catalog Number	Height			Width		Depth		Knockout Diagram①	Approx. Shipping Weight (lbs.)
	Box A	With Door B	With Rain Shed C	Box D	With Handle E	Box F	With Handle G		
GF221NA, GF321NA	8.4	8.56	—	5.08	5.44	2.93	3.96	S4	30(10)
GF221NRA, GF321NRA	8.4	8.56	8.56	5.08	5.44	2.93	3.96	S5	30(10)
GF221NLA, GF321NLA	9.91	10.07	10.07	6.06	6.42	3.21	4.24	S26	20(5)
GF221NRLA, GF321NRLA	9.91	10.07	—	6.06	6.42	3.21	4.24	S25	20(5)
GF222NA, GF3222NA	9.91	10.07	—	6.06	6.42	3.21	4.24	S21	20(5)
GF222NRA, GF322NRA	9.91	10.07	10.07	6.06	6.42	3.21	4.24	S22	20(5)
GF223NA	16.3	17.5	—	10.2	11.2	5.1	8.5	S16	17
GF223NRA	16.3	17.5	17.8	10.2	11.2	5.1	8.5	S17	17
GF224NA	25	26	—	15.4	16.6	7.8	10.7	S12	37
GF224NRA	25	26	26.3	15.4	16.6	7.8	10.7	S13	37
GF225NA	45.32	45.81	—	22.4	23.404	6.94	9.93	S18	91.1
GF225NRA	45.32	45.81	—	22.4	23.404	6.94	9.93	S19	91.1
GF226NA	45.32	45.81	—	22.4	23.404	6.94	9.93	S18	95.6
GF226NRA	45.32	45.81	—	22.4	23.404	6.94	9.93	S19	95.6
GF323NA	16.3	17.5	—	10.2	11.2	5.1	8.5	S16	17
GF323NRA	16.3	17.5	17.8	10.2	11.2	5.1	8.5	S17	17
GF323NLA	21.95	23.15	—	9.64	11.7	5.05	8.63	S10	25
GF323NRLA	21.95	—	23.46	9.64	11.67	5.05	8.7	S11	25
GF324NA	25	26	—	15.4	16.6	7.8	10.7	S12	37
GF324NRA	25	26	26.3	15.4	16.6	7.8	10.7	S13	37
GF324NLA	29.9	31.07	—	14.62	16.68	6.36	10.92	S12	49
GF324NRLA	29.9	—	31.42	14.61	16.68	6.36	10.92	S13	50
GF325NA	45.32	45.81	—	22.4	23.404	6.94	9.93	S18	94.6
GF325NRA	45.32	45.81	—	22.4	23.404	6.94	9.93	S19	94.6
GF326NRA	45.32	45.81	—	22.4	23.404	6.94	9.93	S19	99.6
GF326NA	45.32	45.81	—	22.4	23.404	6.94	9.93	S18	99.6
GF326NRA	45.32	45.81	—	22.4	23.404	6.94	9.93	S19	99.6
GNF221A, GNF321A	6.18	6.35	—	4.2	4.56	2.88	3.93	S4	20(10)
GNF221RA, GNF321RA	6.18	6.35	6.35	4.2	4.56	2.88	3.93	S5	20(10)
GNF321LA, GNF221LA	8.4	8.56	—	5.08	5.43	2.93	3.95	S4	30(10)
GNF321LLA, GNF221LLA	9.91	10.07	—	6.06	6.42	3.21	4.24	S24	20(5)
GNF321RLA, GNF221RLA	8.4	8.56	8.56	5.08	5.43	2.93	3.95	S5	30(10)
GNF321RLLA, GNF221RLLA	9.91	10.07	10.07	6.06	6.42	3.21	4.24	S23	20(5)
GNF222A, GNF322A	8.4	8.56	—	5.08	5.43	2.93	3.95	S4	30(10)
GNF322LA, GNF222LA	9.91	10.07	—	6.06	6.42	3.21	4.24	S24	20(5)
LNF222RA, LNF221RLA	8.4	8.56	8.56	5.08	5.43	2.93	3.95	S20	30(10)
GNF322RLA, GNF222RLA	9.91	10.07	10.07	6.06	6.42	3.21	4.24	S23	20(5)
GNF222RA, GNF322RA	8.4	8.56	8.56	5.08	5.43	2.93	3.95	S5	30(10)
LNF221RLLA, LNF222RLA	9.91	10.07	—	6.06	6.42	3.21	4.24	S23	20(5)
GNF323A	16.3	17.5	—	10.2	11.2	5.1	8.5	S16	17
GNF323RA, GNF223RA	16.3	17.5	17.8	10.2	11.2	5.1	8.5	S17	17
GNF324A	25	26	—	15.4	16.6	7.8	10.7	S12	35
GNF324RA, GNF224RA	25	26	26.3	15.4	16.6	7.8	10.7	S13	35
GNF325A	33.47	33.96	—	22.4	23.404	6.94	9.93	S18	75
GNF326A	33.47	33.96	—	22.4	23.404	6.94	9.93	S18	77
HF221J also **HF261J**	14.27	17.33	—	6.65	9.02	5.32	10.46	—	13
HF221N also **HF261**	14.26	14.60	—	6.64	7.75	4.71	8.89	S6	13
HF221NR also **HF261R**	14.34	—	14.91	6.64	7.88	5.00	9.18	S8	14
HF221S also **HF261S**	14.27	17.33	—	6.65	9.02	5.32	10.46	—	13
HF222J also **HF262J**	16.22	19.31	—	9.17	11.47	5.33	10.46	—	19
HF222N also **HF262**	16.26	16.62	—	9.16	10.37	4.71	8.67	S16	18
HF222NR also **HF262R**	16.26	—	16.93	9.16	10.41	5.05	9.21	S17	19
HF222S also **HF262S**	16.22	19.31	—	9.17	11.47	5.33	10.46	—	19
HF223J also **HF263J**	21.96	23.16	—	9.65	12.02	5.34	10.46	—	24
HF223N also **HF263**	21.95	23.15	—	9.64	12.01	5.05	10.17	S10	23
HF223NR also **HF263R**	21.95	—	23.46	9.64	11.97	5.05	10.17	S11	24
HF223S also **HF263S**	21.96	23.16	—	9.65	12.02	5.34	10.46	—	24
HF224J	29.96	31.07	—	14.62	16.95	6.63	12.58	—	48
HF224N	29.9	31.07	—	14.62	16.98	6.36	12.33	S12	47
HF224NR	29.9	—	31.42	14.61	16.99	6.36	12.33	S13	48
HF224S	29.96	31.07	—	14.62	16.95	6.63	12.58	—	48
HF225NRA	45.32	45.81	—	22.4	23.404	6.94	9.93	S19	91.1
HF225NA	45.32	45.81	—	22.4	23.404	6.94	9.93	S18	91.1
HF226NA	45.32	45.81	—	22.4	23.404	6.94	9.93	S18	95.6
HF226NRA	45.32	45.81	—	22.4	23.404	6.94	9.93	S19	95.6
HF227N	66.67	67.16	—	38.4	39.96	9.24	14.68	—	360
HF227NR	66.67	—	67.74	38.4	39.96	9.24	14.68	—	362
HF228N	66.67	67.16	—	38.4	39.96	9.24	14.68	—	362

***For inches / millimeters conversion, multiply inches by 25.4.**

① Knocks not provided on Type 4 / 4X and 12 or in 800 & 1200A switches.

Safety Switch Dimensions (Inches)* & Shipping Weights

Catalog Number	Height			Width		Depth		Knockout Diagram①	Approx. Shipping Weight (lbs.)
	Box A	With Door B	With Rain Shed C	Box D	With Handle E	Box F	With Handle G		
HF228NR	66.67	—	67.74	38.4	39.96	9.24	14.68	—	364
HF261	14.26	14.60	—	6.64	7.75	4.71	8.89	S6	13
HF261R	14.34	—	14.91	6.64	7.88	5.00	9.18	S8	14
HF262	16.26	16.62	—	9.16	10.37	4.71	8.67	S16	18
HF262R	16.26	—	16.93	9.16	10.41	5.05	9.21	S17	19
HF321J	14.27	17.33	—	6.65	9.02	5.32	10.46	—	14
HF321N	14.26	14.60	—	6.64	7.75	4.71	8.89	S6	13
HF321NR	14.34	—	14.91	6.64	7.88	5.00	9.18	S8	14
HF321S, SS	14.27	17.33	—	6.65	9.02	5.32	10.46	—	14
HF322J	16.27	19.31	—	9.17	11.47	5.33	10.46	—	20
HF322N	16.26	16.62	—	9.16	10.37	4.71	8.67	S16	18
HF322NR	16.26	—	16.93	9.16	10.41	5.05	9.21	S17	19
HF322S, SS	16.27	19.31	—	9.17	11.47	5.33	10.46	—	20
HF323J	21.96	23.16	—	9.65	12.02	5.34	10.46	—	25
HF323N	21.95	23.15	—	9.64	12.01	5.05	10.17	S10	25
HF323NR	21.95	—	23.46	9.64	11.97	5.05	10.17	S11	26
HF323S, SS	21.96	23.16	—	9.65	12.02	5.34	10.46	—	25
HF324J	29.96	31.07	—	14.62	16.95	6.63	12.58	—	49
HF324N	29.9	31.07	—	14.62	16.98	6.36	12.33	S12	49
HF324NR	29.9	—	31.42	14.61	16.99	6.36	12.33	S13	50
HF324S, SS	21.96	31.07	—	14.62	16.95	6.63	12.58	—	49
HF325JA	45.32	45.81	—	22.4	23.404	6.97	10.05	—	93
HF325NA	45.32	45.81	—	22.4	23.404	6.94	9.93	S18	94.6
HF325NRA	45.32	45.81	—	22.4	23.404	6.94	9.93	S19	94.6
HF325SA	45.32	45.81	—	22.4	23.404	7.34	10.347	—	93
HF325SSA	45.32	45.81	—	22.4	23.404	7.34	10.347	—	93
HF326JA	45.32	45.81	—	22.4	23.404	6.97	10.05	—	98
HF326NA	45.32	45.81	—	22.4	23.404	6.94	9.93	S18	99.6
HF326NRA	45.32	45.81	—	22.4	23.404	6.94	9.93	S19	99.6
HF326SA	45.32	45.81	—	22.4	23.404	7.34	10.347	—	98
HF326SSA	45.32	45.81	—	22.4	23.404	7.34	10.347	—	98
HF327J	66.67	67.16	—	38.4	39.96	9.24	14.68	—	367
HF327N	66.67	67.16	—	38.4	39.96	9.24	14.68	—	380
HF327NR	66.67	—	67.74	38.4	40.25	9.24	14.68	—	383
HF327S	66.67	67.16	—	38.4	39.96	9.24	14.68	—	367
HF328N	66.67	67.16	—	38.4	39.96	9.24	14.68	—	382
HF328NR	66.67	—	67.74	38.4	40.25	9.24	14.68	—	385
HF361, PV, PVPG	14.26	14.60	—	6.64	7.75	4.71	8.89	S6	13
HF361J, JW	14.27	17.33	—	6.65	9.02	5.32	10.46	—	14
HF361L	16.26	17.46	—	9.15	11.53	5.05	10.17	S16	19
HF361N	14.26	14.60	—	6.64	7.75	4.71	8.89	S6	13
HF361NR	14.34	—	14.91	6.64	7.88	5.00	9.18	S8	14
HF361R, RPV, RPVPG	14.34	—	14.91	6.64	7.88	5.00	9.18	S8	14
HF361RL, RW	16.26	—	16.93	9.16	10.41	5.05	9.21	S17	19
HF361S, SS, SSW, SW	14.27	17.33	—	6.65	9.02	5.32	10.46	—	15
HF362, PV, PVPG	16.26	16.62	—	9.16	10.37	4.71	8.67	S16	18
HF362J, JW	16.27	19.31	—	9.17	11.47	5.33	10.46	—	20
HF362N	16.26	16.62	—	9.16	10.37	4.71	8.67	S16	18
HF362NR	16.26	—	16.93	9.16	10.41	5.05	9.21	S17	19
HF362R, RPV, RPVPG, RW	16.26	—	16.93	9.16	10.41	5.05	9.21	S17	19
HF362RL	21.95	—	23.46	9.64	11.97	5.05	10.17	S11	25
HF362S, SS, SSW, SW	16.27	19.31	—	9.17	11.47	5.33	10.46	—	20
HF363, PV, PVPG	21.95	23.15	—	9.64	12.01	5.05	10.17	S10	24
HF363J, JW	21.96	23.16	—	9.65	12.02	5.34	10.46	—	25
HF363N	21.95	23.15	—	9.64	12.01	5.05	10.17	S10	25
HF363NR	21.95	—	23.46	9.64	11.97	5.05	10.17	S11	26
HF363R, RPV, RPVPG	21.95	—	23.46	9.64	11.97	5.05	10.17	S11	25
HF363S, SS, SSW, SW	21.96	23.16	—	9.65	12.02	5.34	10.46	—	25
HF364, PV, PVPG	29.9	31.07	—	14.62	16.98	6.36	12.33	S12	48
HF364J, JW	29.96	31.07	—	14.62	16.95	6.63	12.58	—	49
HF364N	29.9	31.07	—	14.62	16.98	6.36	12.33	S12	49
HF364NR	29.9	—	31.42	14.61	16.99	6.36	12.33	S13	48
HF364R, RPV, RPVPG	29.9	—	31.42	14.61	16.99	6.36	12.33	S13	49
HF364S, SS, SSW, SW	29.96	31.07	—	14.62	16.95	6.63	12.58	—	49
HF365A	45.32	45.81	—	22.4	23.404	6.94	9.93	S18	93
HF365JA, JWA	45.32	45.81	—	22.4	23.404	6.97	10.05	—	93
HF365NA	45.32	45.81	—	22.4	23.404	6.94	9.93	S18	94.6
HF365NRA	45.32	45.81	—	22.4	23.404	6.94	9.93	S19	94.6

***For inches / millimeters conversion, multiply inches by 25.4.**

① Knocks not provided on Type 4 / 4X and 12 or in 800 & 1200A switches.

Safety Switch Dimensions (Inches)* & Shipping Weights

Catalog Number	Height			Width		Depth		Knockout Diagram①	Approx. Shipping Weight (lbs.)
	Box A	With Door B	With Rain Shed C	Box D	With Handle E	Box F	With Handle G		
HF365RA	45.32	45.81	—	22.4	23.404	6.94	9.93	S19	93
HF365SA, SS, SWA, SSWA	45.32	45.81	—	22.4	23.404	7.34	10.347	—	93
HF366A	45.32	45.81	—	22.4	23.404	6.94	9.93	S18	98
HF366JA, JWA	45.32	45.81	—	22.4	23.404	6.97	10.05	—	98
HF366NA	45.32	45.81	—	22.4	23.404	6.94	9.93	S18	99.6
HF366NRA	45.32	45.81	—	22.4	23.404	6.94	9.93	S19	99.6
HF366RA	45.32	45.81	—	22.4	23.404	6.94	9.93	S19	98
HF366SA, SSA	45.32	45.81	—	22.4	23.404	7.34	10.347	—	98
HF367	66.67	67.16	—	38.4	39.96	9.24	14.68	—	380
HF367J, JW	66.67	67.16	—	38.4	39.96	9.24	14.68	—	380
HF367N	66.67	67.16	—	38.4	39.96	9.24	14.68	—	382
HF367NR	66.67	—	67.74	38.4	40.25	9.24	14.68	—	386
HF367R, RW	66.67	—	67.74	38.4	40.25	9.24	14.68	—	382
HF367S, SW	66.67	67.16	—	38.4	39.96	9.24	14.68	—	380
HF368, J, S, JW, SW	66.67	67.16	—	38.4	39.96	9.24	14.68	—	383
HF368N	66.67	67.16	—	38.4	39.96	9.24	14.68	—	385
HF368NR	66.67	—	67.74	38.4	40.25	9.24	14.68	—	388
HF368R, RW	66.67	—	67.74	38.4	40.25	9.24	14.68	—	385
HFC221N	14.26	14.6	—	6.64	7.75	4.71	8.89	S6	13
HFC221NR	14.34	—	14.91	6.64	7.88	5	9.18	S8	14
HFC222N	16.26	16.62	—	9.16	10.37	4.71	8.67	S16	18
HFC222NR	16.26	—	16.93	9.16	10.41	5.05	9.21	S17	19
HFC261	14.26	14.6	—	6.64	7.75	4.71	8.89	S6	13
HFC261R	14.34	—	14.91	6.64	7.88	5	9.18	S8	14
HFC262	16.26	16.62	—	9.16	10.37	4.71	8.67	S16	18
HFC262R	16.26	—	16.93	9.16	10.41	5.05	9.21	S17	19
HFC321N	14.26	14.6	—	6.64	7.75	4.71	8.89	S6	13
HFC321NR	14.34	—	14.91	6.64	7.88	5	9.18	S8	14
HFC322N	16.26	16.62	—	9.16	10.37	4.71	8.67	S16	18
HFC322NR	16.26	—	16.93	9.16	10.41	5.05	9.21	S17	19
HFC361	14.26	14.6	—	6.64	7.75	4.71	8.89	S6	13
HFC361N	14.26	14.6	—	6.64	7.75	4.71	8.89	S6	13
HFC361NR	14.34	—	14.91	6.64	7.88	5	9.18	S8	14
HFC361R	14.34	—	14.91	6.64	7.88	5	9.18	S8	14
HFC362	16.26	16.62	—	9.16	10.37	4.71	8.67	S16	18
HFC362N	16.26	16.62	—	9.16	10.37	4.71	8.67	S16	18
HFC362NR	16.26	—	16.93	9.16	10.41	5.05	9.21	S17	19
HFC362R	16.26	—	16.93	9.16	10.41	5.05	9.21	S17	19
HNF365JA, JWA	45.32	45.81	—	22.4	23.404	6.97	10.05	—	75
HNF365RA	33.47	33.96	—	22.4	23.404	6.94	9.93	S19	75
HNF365SA, SSA, SWA, SSWA	33.47	33.96	—	22.4	23.404	7.34	10.347	—	75
HNF366SA, SSA	33.47	33.96	—	22.4	23.404	7.34	10.347	—	77
HNF366JA, JWA	45.32	45.81	—	22.4	23.404	6.97	10.05	—	77
HNF366RA	33.47	33.96	—	22.4	23.404	6.94	9.93	S19	77
HNF361, PV, PVPG also **HNF261 & HNF362H, HNFC261, HNFC361**	11.11	11.45	—	6.64	7.72	4.7	9.15	S7	11
HNF361J, JW also **HNF261J & HNF362JH**	11.12	14.14	—	6.65	9.02	5.56	10.46	—	13
HNF361R, RPV, RPVPG also **HNF261R & HNF362RH, HNFC261R, HNFC361R**	11.09	—	11.76	6.64	7.88	5	8.91	S9	12
HNF361RL, HNF362R, RPV, RPVPG also **HNF262R, HNFC262R, HNFC362R**	16.26	—	16.93	9.16	10.41	5.05	9.14	S17	18
HNF361S, SS, SSW, SW also **HNF261S & HNF362SH**	11.12	14.14	—	6.65	9.02	5.56	10.46	—	13
HNF362, PV, PVPG also **HNF262, HNFC262, HNFC362**	16.26	16.62	—	9.16	10.26	4.71	9.04	S16	17
HNF362J, JW also **HNF262J**	16.27	17.46	—	9.17	11.47	5.33	10.46	—	19
HNF362RL, HNFC262R, HNFC362R	21.95	—	23.46	9.64	11.97	5.05	10.17	S11	24
HNF362S, SS, SSW, SW also **HNF262S**	16.27	17.46	—	9.17	11.47	5.33	10.46	—	19
HNF263	16.3	17.5	—	10.2	11.5	5.1	10.2	S16	17
HNF236R	16.3	17.5	17.8	10.2	11.5	5.1	10.2	S17	17
HNF363	16.3	17.5	—	10.2	11.5	5.1	10.2	S16	17
HNF363R	16.3	17.5	17.8	10.2	11.5	5.1	10.2	S17	17
HNF363L, PV, PVPG	21.95	23.15	—	9.64	12.01	5.05	10.17	S10	23
HNF363J, JW also **HNF263J**	21.96	23.16	—	9.65	12.02	5.34	10.46	—	24
HNF363RL, RPV, RPVPG also **HNF263R**	21.95	—	23.46	9.64	11.97	5.05	10.17	S11	24
HNF364	25	26	—	15.4	16.6	7.8	12.3	S12	35
HNF364R	25	26	26.3	15.4	16.6	7.8	12.3	S13	35
HNF363S, SS, SSW, SW also **HNF263S**	21.96	23.16	—	9.65	12.02	5.34	10.46	—	24

***For inches / millimeters conversion, multiply inches by 25.4.**

① Knocks not provided on Type 4 / 4X and 12 or in 800 & 1200A switches.

Safety Switch Dimensions (Inches)* & Shipping Weights

Catalog Number	Height			Width		Depth		Knockout Diagram①	Approx. Shipping Weight (lbs.)
	Box A	With Door B	With Rain Shed C	Box D	With Handle E	Box F	With Handle G		
HNF364L, PV, PVPG	29.9	31.07	—	14.62	16.98	6.36	12.33	S12	46
HNF364J, JW	29.96	31.07	—	14.62	16.95	6.63	12.58	—	47
HNF364RL, RPV, RPVPG	29.9	—	31.42	14.61	16.99	6.36	12.33	S13	47
HNF364S, SS, SSW, SW	29.96	31.07	—	14.62	16.95	6.63	12.58	—	47
HNF365JA, JWA	45.32	45.81	—	22.4	23.404	6.97	10.05	—	75
HNF365RA	33.47	33.96	—	22.4	23.404	6.94	9.93	S19	75
HNF365SA, SSA, SWA, SSWA	33.47	33.96	—	22.4	23.404	7.34	10.347	—	75
HNF366JA, JWA	45.32	45.81	—	22.4	23.404	6.97	10.05	—	77
HNF366RA	33.47	33.96	—	22.4	23.404	6.94	9.93	S19	77
HNF366SA	33.47	33.96	—	22.4	23.404	7.34	10.347	—	77
HNF367, J, JWA	54.67	55.16	—	38.4	39.96	9.24	14.68	—	302
HNF367R, RW	54.67	—	55.7	38.4	40.25	9.24	14.68	—	304
HNF367S, SW	54.67	55.16	—	38.4	39.96	9.24	14.68	—	302
HNF368, J, S, SW, JW	54.67	55.16	—	38.4	39.96	9.24	14.68	—	305
HNF368R, RW	54.67	55.16	—	38.4	40.25	9.24	14.68	—	307
US2:HF361PV	14.26	14.6	—	6.64	7.75	4.71	8.89	S6	13
US2:HF361PVPG	14.26	14.6	—	6.64	7.75	4.71	8.89	S6	13
US2:HF361RPV	14.34	—	14.91	6.64	7.88	5	9.18	S8	14
US2:HF361RPVPG	14.34	—	14.91	6.64	7.88	5	9.18	S8	14
US2:HF362PV	16.26	16.62	—	9.16	10.37	4.71	8.67	S16	18
US2:HF362PVPG	16.26	16.62	—	9.16	10.37	4.71	8.67	S16	18
US2:HF362RPV	16.26	—	16.93	9.16	10.41	5.05	9.21	S17	19
US2:HF362RPVPG	16.26	—	16.93	9.16	10.41	5.05	9.21	S17	19
US2:HNF361PV	11.11	11.45	—	6.64	7.72	4.7	9.15	S7	11
US2:HNF361PVPG	11.11	11.45	—	6.64	7.72	4.7	9.15	S7	11
US2:HNF361RPV	11.09	—	11.76	6.64	7.88	5	8.91	S9	12
US2:HNF361RPVPG	11.09	—	11.76	6.64	7.88	5	8.91	S9	12
US2:HNF362PV	16.26	16.62	—	9.16	10.26	4.71	9.04	S16	17
US2:HNF362PVPG	16.26	16.62	—	9.16	10.26	4.71	9.04	S16	17
US2:HNF362RPV	16.26	—	16.93	9.16	10.41	5.05	9.14	S17	18
US2:HNF362RPVPG	16.26	—	16.93	9.16	10.41	5.05	9.14	S17	18

Type 1 or 3R
30-60A GD

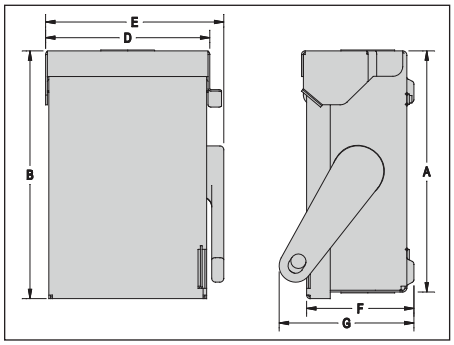

Type 1 or 3R
100-200A GD, 30-200A HD Type VBII

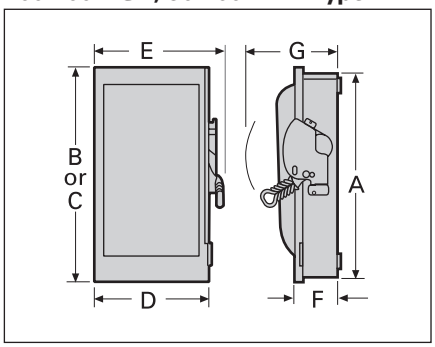

Type 4/4X or 12
30-200A HD Type VBII

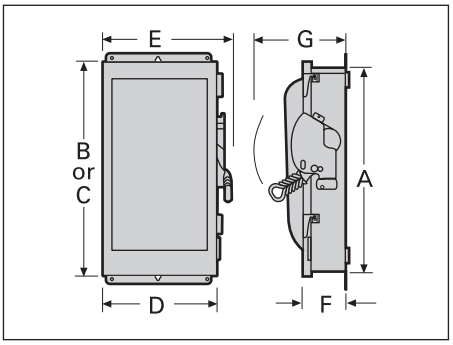

Type 1 or 3R
400-1200A Type VBII (GD & HD)

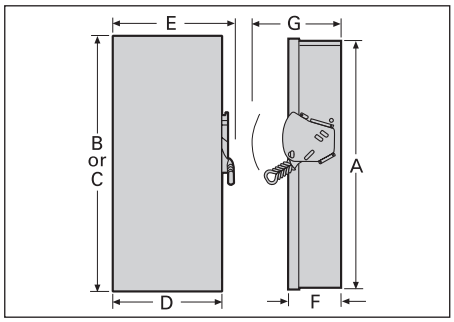

Type 4/4X or 12
400-1200A HD Type VBII

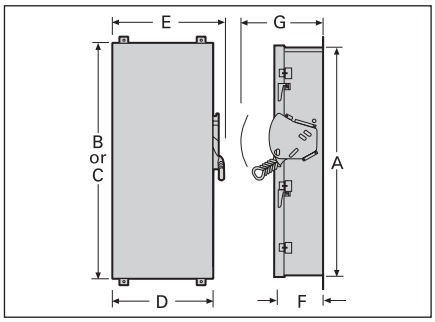

***For inches / millimeters conversion, multiply inches by 25.4.**

① Knocks not provided on Type 4 / 4X and 12 or in 800 & 1200A switches.

Special Application Safety Switch Dimensions (Inches)

Ampere Rating	NEMA Type	Figure	Dimensions (Inches)					
			A	B	D	E	F	G
Elevator Control Switch								
30, 60, 100	1	A	29.96	31.07	15.95	16.78	6.58	10.19
30, 60, 100	3R/12	B	29.96	31.07	15.95	16.88	6.58	10.43
200	1/3R/12	B	34.06	35.17	22.12	23.40	7.23	11.30
400	1/3R/12	B	44.70	45.81	22.12	23.40	7.35	11.46
Heavy-Duty Shunt Trip Safety Switches								
30, 60, 100	1/3R/12	B	29.96	31.07	14.66	16.88	6.58	9.88
200	1/3R/12	B	34.06	35.17	22.12	23.40	7.23	11.30
400	1/3R/12	B	44.70	45.81	22.12	23.40	7.35	11.46
Heavy Duty Switches with Surge Protection								
30, 60, 100	1/3R/12	B	29.96	31.07	14.66	16.88	6.58	9.88
200	1/3R/12	B	34.06	35.17	22.12	23.40	7.23	11.30
400	1/3R/12	B	44.70	45.81	22.12	23.40	7.35	11.46

Figure A

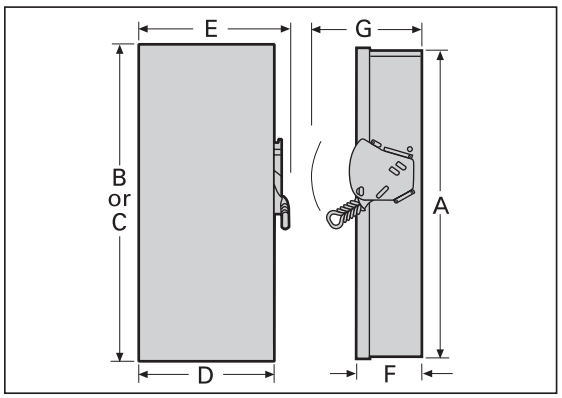

Figure B

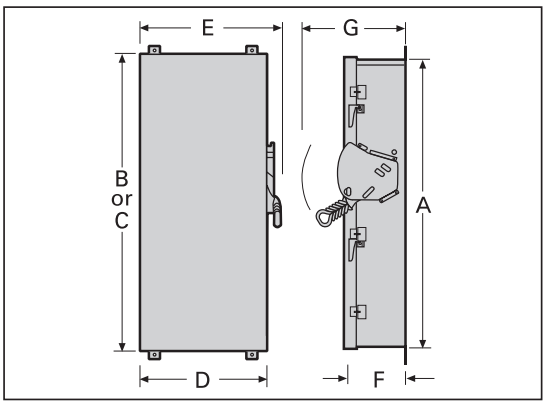

Knockout Diagrams

Type 1 & 3R Enclosures

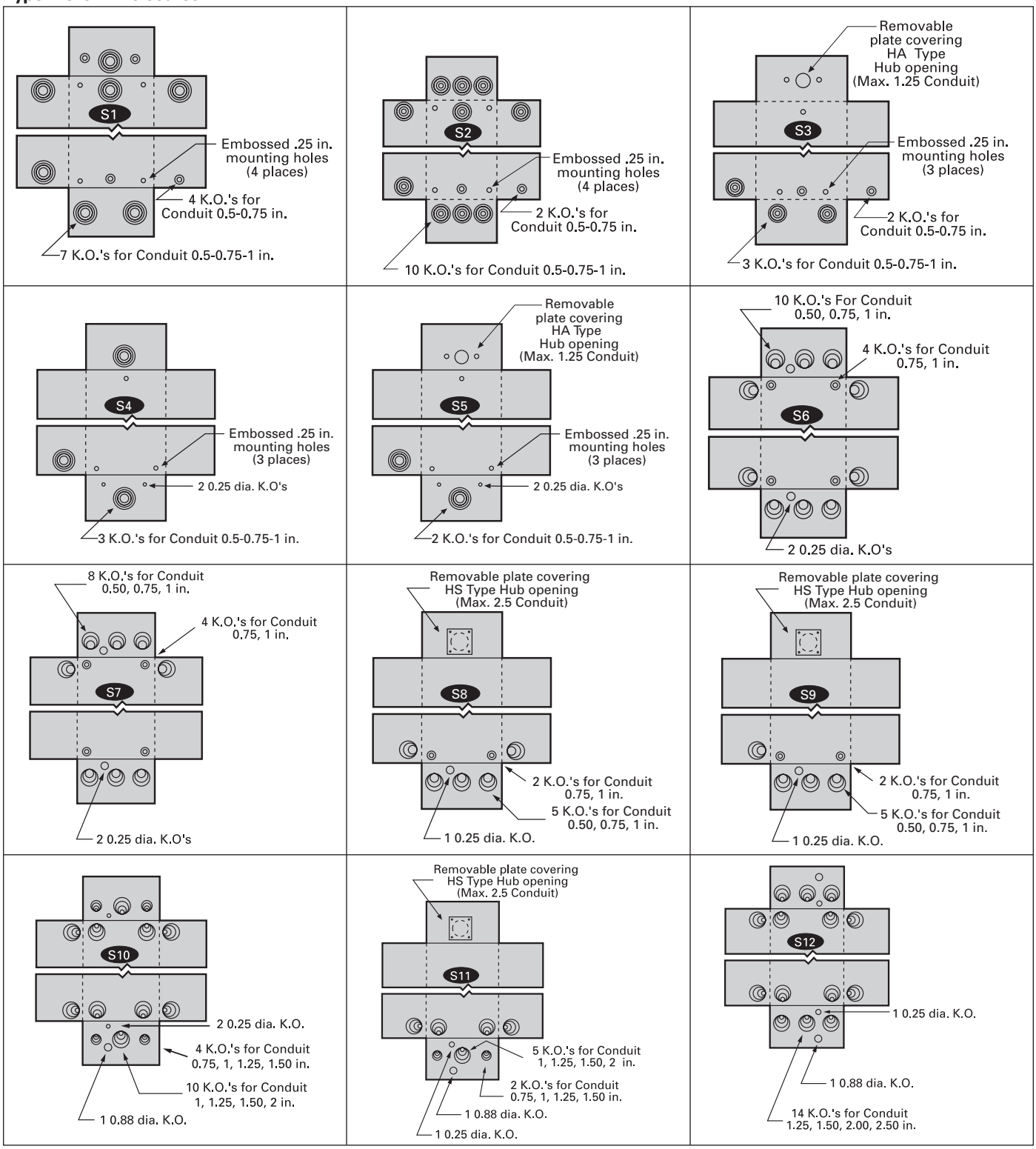

***For inches / millimeters conversion, multiply inches by 25.4.**

Type 1 & 3R Enclosures

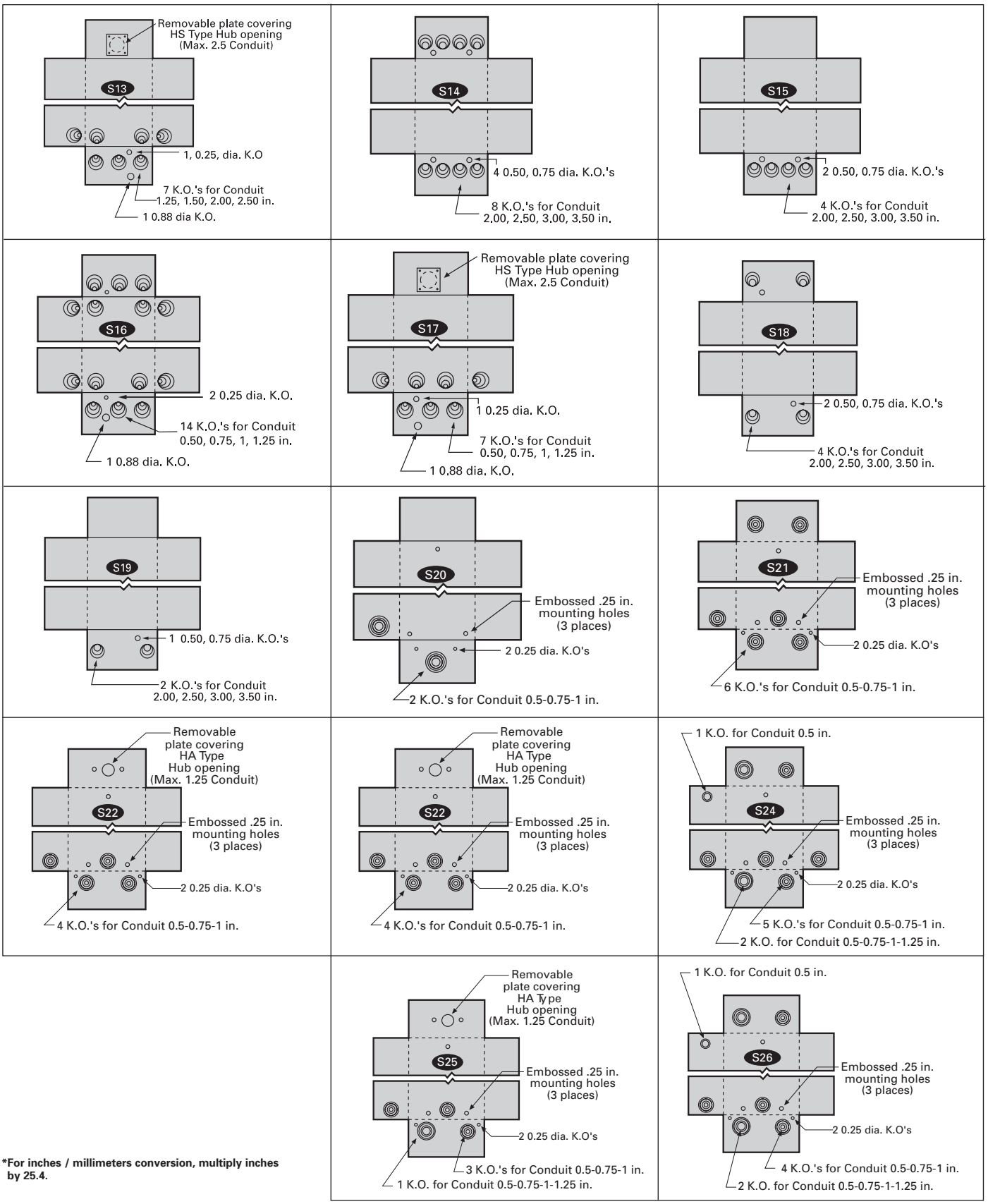

***For inches / millimeters conversion, multiply inches by 25.4.**

Special Application: Non-Metallic

Dimensions

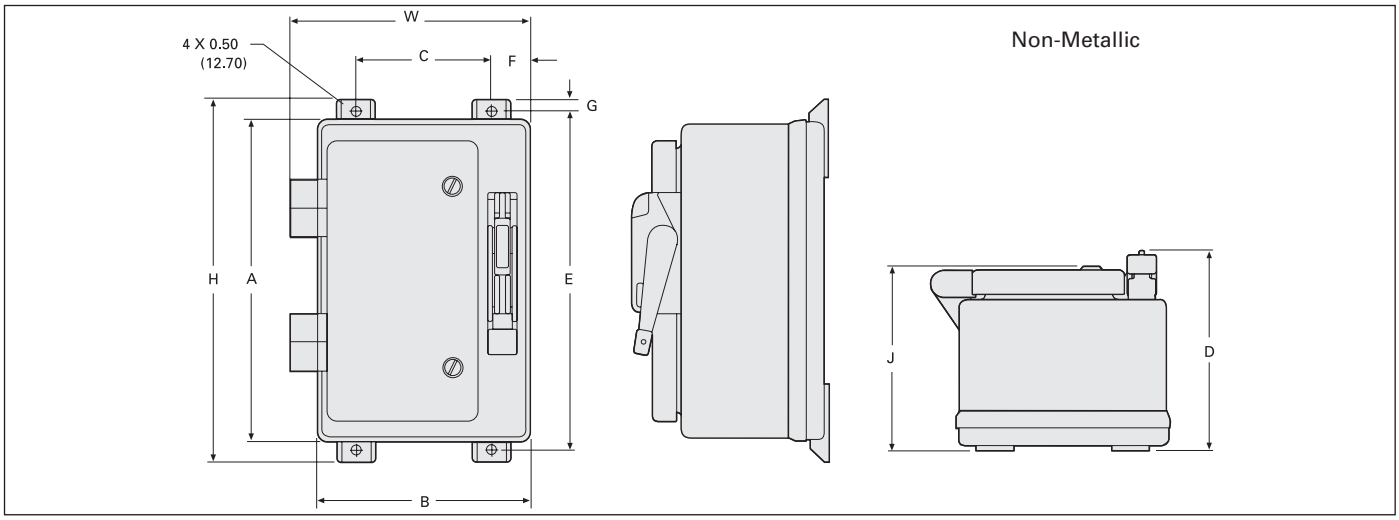

Catalog Number	Dimensions (Inches) Non-Metallic									
	H	W	D	A	B	C	E	F	G	J
HF321NX	18.75	12.11	10.25	16.59	10.97	7.00	17.50	1.98	.46	9.20
HF322NX	18.75	12.11	10.25	16.59	10.97	7.00	17.50	1.98	.46	9.20
HF361NX①	18.75	12.11	10.25	16.59	10.97	7.00	17.50	1.98	.46	9.20
HF362NX①	18.75	12.11	10.25	16.59	10.97	7.00	17.50	1.98	.46	9.20
HF363NX①	26.95	14.87	13.25	24.84	13.72	6.25	25.75	3.75	.46	12.15
HF364NX①	33.41	27.47	13.19	31.31	26.31	18.50	32.25	3.91	.47	12.10
HNF361X①	18.75	12.11	10.25	16.59	10.97	7.00	17.50	1.98	.46	9.20
HNF362X①	18.75	12.11	10.25	16.59	10.97	7.00	17.50	1.98	.46	9.20
HNF363X①	26.95	14.87	13.25	24.84	13.72	6.25	25.75	3.75	.46	12.15
HNF364X①	33.41	27.47	13.19	31.31	26.31	18.50	32.25	3.91	.47	12.10

VBII Interlocked Receptacle Switches

Ampere Rating	Dimensions (Inches)						
	A	B	C	D	E	F	G
Cr-H Type Fusible (240 & 600V)							
30	14.27	7.42	9.02	6.22	1.52	6.1	6.0
60	16.27	9.17	11.47	6.34	1.52	6.4	7.4
100	21.96	9.65	12.02	6.80	1.52	6.5	7.6
Cr-H Type Non-Fusible (600V max.)							
30	14.27	7.42	9.02	6.22	1.52	6.1	6.0
60	16.27	9.17	11.47	6.34	1.52	6.4	7.4
100	21.96	9.65	12.02	6.80	1.52	6.5	7.6
Pyle-National Type Fusible (240 & 600V)							
30	14.27	7.42	9.02	6.22	1.52	3.5	3.0
60	16.27	9.17	11.47	6.34	1.52	5.0	4.5
Pyle-National Type Non-Fusible (600V max.)							
30	14.27	7.42	9.02①	6.22	1.52	3.5	3.0
60	16.27	9.17	11.47①	6.34	1.52	5.0	4.5

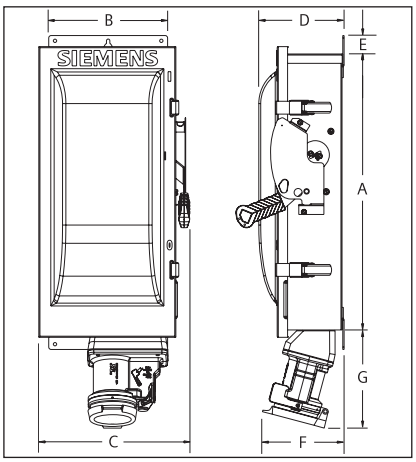

***For inches / millimeters conversion, multiply inches by 25.4.**

① Dimensions also apply to "L" suffix switches (less lugs).

4 & 6-Pole Safety Switch Dimensions – Inches (mm)

Catalog Number	Enclosure			Mounting		
	A	B	C	D	E	F
Figure 1, 4-Pole Fusible and Non-fusible, Type 1						
HNF461	24.50 (622)	9.53 (242)	6.09 (155)	19.00 (483)	6.75 (171)	0.268 (7)
HF461	29.12 (740)	9.53 (242)	6.09 (155)	23.50 (597)	6.75 (171)	0.268 (7)
HNF462	24.88 (632)	11.50 (292)	6.09 (155)	19.00 (483)	9.38 (238)	0.268 (7)
HF462	33.53 (852)	11.50 (292)	6.09 (155)	27.50 (699)	9.38 (238)	0.268 (7)
HNF463	27.62 (702)	12.18 (309)	6.09 (155)	19.36 (492)	8.00 (203)	0.268 (7)
HF463	36.44 (926)	12.18 (309)	6.09 (155)	28.11 (714)	8.00 (203)	0.268 (7)
HNF464	36.00 (914)	19.12 (486)	6.42 (163)	30.88 (784)	15.00 (381)	0.44 (11)
HF464	49.48 (1257)	19.12 (486)	6.42 (163)	45.50 (1130)	15.00 (381)	0.44 (11)
Figure 2, 4 & 6-Pole Fusible Type 12/3R and 4X						
HF461J, HF661J, HF661S	29.50 (622)	9.53 (242)	6.48 (165)	31.65 (804)	5.47 (139)	0.27 (7)
HF462J, HF662J, HF662S	33.53 (852)	11.50 (292)	6.48 (165)	35.69 (907)	8.00 (203)	0.27 (7)
HF463J, HF663J, HF663S	36.44 (926)	12.18 (309)	6.48 (165)	38.67 (982)	8.47 (215)	0.27 (7)
HF464J, HF664J, HF664S	49.48 (1257)	19.12 (486)	6.78 (172)	51.64 (1312)	13.44 (341)	0.33 (8)
Figure 2, 4 & 6-Pole Non-fusible Type 12/3R and 4X						
HNF461J, HNF661J, HNF661S	24.50 (622)	9.53 (242)	6.48 (165)	26.65 (667)	5.47 (139)	0.27 (7)
HNF462J, HNF662J, HNF662S	24.88 (632)	11.50 (292)	6.48 (165)	27.03 (687)	8.00 (203)	0.27 (7)
HNF463J, HNF663J, HNF663S	27.54 (700)	12.18 (309)	6.48 (165)	29.77 (756)	8.47 (215)	0.27 (7)
HNF464J, HNF664J, HNF664S	36.00 (914)	19.12 (486)	6.78 (172)	38.16 (969)	13.44 (341)	0.33 (8)

Figure 1: Type 1

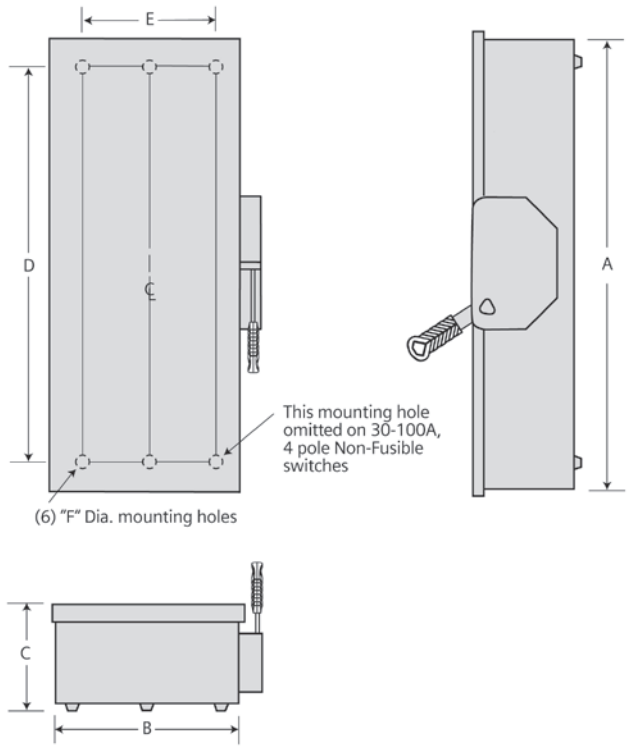

Figure 2 : Type 12/3R and 4X

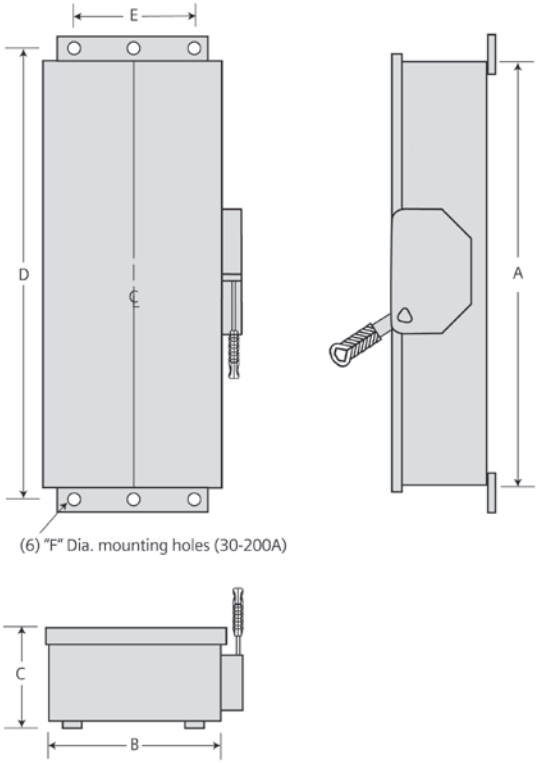

VBII Design Double Throw Dimensions (Inches)

Catalog Number	Enclosure			Mounting		
	A	B	C	D	E	F
Figure 1 (30-1200A Type 1 & 3R)						
DTNF221, DTNF321, DTNF361, DTNF361R	24.50	9.53	6.09	19.00	6.75	0.268
DTF321, DTF321R, DTF361	29.12	9.53	6.09	23.50	6.75	0.268
DTNF222, DTNF322, DTNF362, DTNF362R	24.88	11.50	6.09	19.00	9.38	0.268
DTF322, DTF322R, DTF362	33.45	11.50	6.09	27.50	9.38	0.268
DTNF223, DTNF323, DTNF323R, DTNF363, DTNF363R, DTGNF223R, DTGNF223NR, DTGNF323R , DTGNF323NR	27.62	12.18	6.09	19.36	8.00	0.268
DTF323, DTF323R, DTF363, DTF363R	36.44	12.18	6.09	28.11	8.00	0.268
DTNF224, DTNF224R, DTNF324, DTNF324R, DTNF364, DTNF364R, DTGNF224R, DTGNF224NR, DTGNF324R, DTGNF324NR	36.00	19.12	6.42	31.00	15.00	0.44
DTF224, DTF224R, DTF324, DTF324R, DTF364, DTF364R	49.44	19.12	6.42	44.50	15.00	0.44
DTF325, DTF326, DTF365	73.54	28.22	9.44	65.50	16.00	0.56
DTNF225, DTNF225R, DTNF325, DTNF365, DTNF365R	57.71	28.22	9.44	49.75	16.00	0.56
DTNF326, DTNF366, DTNF366R	57.71	28.22	9.44	49.75	16.00	0.56
DTNF327, DTNF367, DTNF367R	71.65	41.60	9.44	63.70	32.00	0.56
DTNF368, DTNF368R	71.65	41.60	9.44	63.70	32.00	0.56
FR325DTK③, FR355DTK③	74.31	24.90	8.88	69.50	20.25	0.56
FR326DTK③	85.65	27.00	8.88	80.75	22.25	0.56
NFR451DTK③, NFR452DTK③, NFR453DTK③	24.63	17.34	4.78	21.50	14.97①	0.27①
NF454DTK②③, NFR454DTK②③	37.25	19.19	6.32	33.50	16.00②	0.56②
NF455DTK③, NF456DTK③, NF457DTK③, NFR455DTK③, NFR456DTK③, NFR457DTK③	63.31	27.00	8.88	58.50	22.25②	0.56②
Figure 2 (30-200A Type 12 & 4X)						
DTNF361J, DTNF361S	24.42	9.65	6.48	26.65	5.47	0.27
DTNF362J, DTNF362S	24.80	11.61	6.48	27.03	8.00	0.27
DTNF363J, DTNF363S	27.54	12.29	6.48	29.77	8.47	0.27
DTNF364J, DTNF364S	35.93	19.24	6.78	38.16	13.44	0.33
NF355HDTK①③, NF355SSDTK①③	53.82	22.66	7.25	56.20	18.00	0.56
NF454SSDTK③	37.47	19.16	6.48	39.75	15.75	0.50②
F353SSDTK②③	37.00	11.62	5.50	38.50	9.00	0.26
F354SSDTK②③	50.90	19.16	6.46	53.27	16.12	0.50
F355SSDTK②③	74.50	25.00	8.92	76.69	20.25	0.56

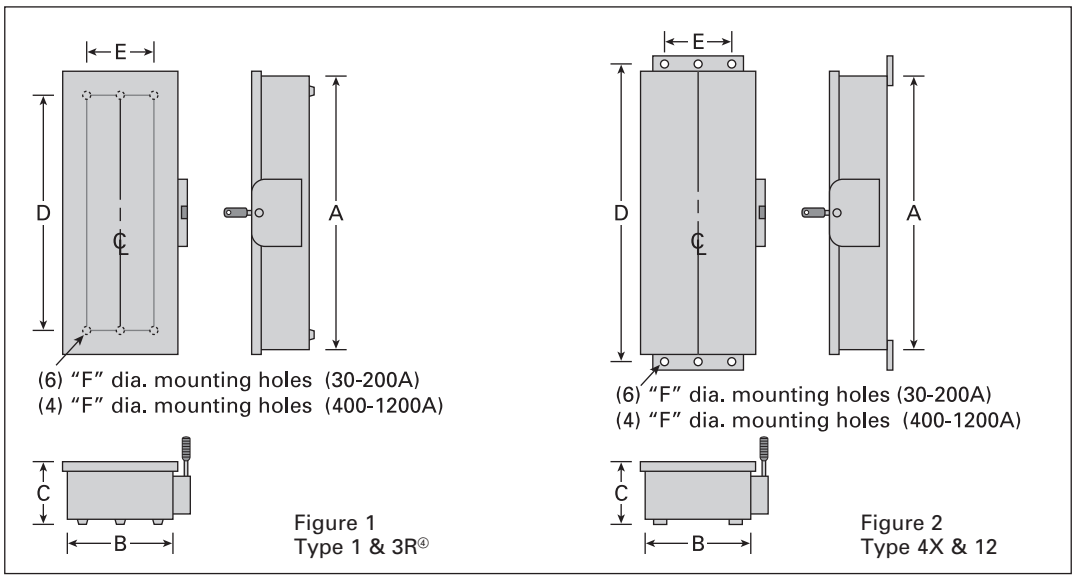

***For inches / millimeters conversion, multiply inches by 25.4.**

① (3) Mounting holes supplied (1 at top).
② (4) Mounting holes provided.
③ These switches are not Type VBII design.
④ Drip hood not shown but provided on Type 3R enclosures.

For enclosed bolted pressure contact switches order as lug-in/lug-out single section BPS main switchboards using either the SPACE 2000 Switchboard EPM or COMPAS.

VBII Safety Switch Replacement Parts

Ampere Rating	Line Base Catalog Number	Load Base Catalog Number	Handle / Handle Guard General Duty Catalog Number	Handle / Handle Guard Heavy Duty Catalog Number
Fusible 2- and 3-Pole 60-600A General Duty & 30-1200A Heavy Duty⑤⑧				
30 HD 240V	**HFB21②**	**HBB21②**	—	**HH6123⑦**
60 HD 240V	**HFB22②**	**HBB22②**	—	**HH6123⑦**
30 600V	**HFB612②**	**HBB612②**	—	**HH6123⑦**
60 600V	**HFB62②**	**HBB62②**	—	**HH6123⑦**
100	**HFB63②**	**HBB63②**	**GH223**	**HH6123⑦**
200	**HFB64②**	**HBB64②**	**GH24**	**HH64⑦**
400 (Legacy)	**HFB65③⑥**	**HBB656③⑥**	**HH65678**	**HH65678⑦**
400 (Series-A)	**HFB65AB**	**HBB656AB**	**HH656A**	**HH656A**
600 (Legacy)	**HFB66③⑥**	**HBB656③⑥**	**HH65678**	**HH65678⑦**
600 (Series-A)	**HFB66AB**	**HBB656AB**	**HH656A**	**HH656A**
800	**HFB67A②⑥**	**HBB67A②⑥**	—	**HH65678⑦**
1200	**HFB68②⑥**	**HBB68②⑥**	—	**HH68⑦**
Non-Fusible 3-Pole 60-600A General Duty & 30-1200A Heavy Duty⑤⑧				
30 HD	**HNB612②**	—	—	**HH6123⑦**
60 HD	**HNB623②**	—	—	**HH6123⑦**
100	**HNB623②**	—	**GH223**	**HH6123⑦**
200	**HNB64②**	—	**GH24**	**HH64⑦**
400 (Legacy)	**HNB65③⑥**	—	**HH65678**	**HH65678⑦**
400 (Series-A)	**HNB656AB**	—	**HH656A**	**HH656A**
600 (Legacy)	**HNB66③⑥**	—	**HH65678**	**HH65678⑦**
600 (Series-A)	**HNB656AB**	—	**HH656A**	**HH656A**
800	**HNB67A②⑥**	—	—	**HH65678⑦**
1200	**HNB678⑥**	—	—	**HH68⑦**

Ampere Rating	Mechanism Assembly Catalog Number	Line & Load Lugs Catalog Number
Fusible 2- and 3-Pole 60-600A General Duty & 30-1200A Heavy Duty⑤⑧		
30 HD 240V	**HM6123⑦**	**HL612①**
60 GD	**HM6123**	**HL612①**
60 HD 240V	**HM6123⑦**	**HL612①**
30 600V	**HM6123⑦**	**HL612①**
60 600V	**HM6123⑦**	**HL612①**
100	**HM6123⑦**	**HL63①**
200	**HM64⑦**	**HL64①**
400 (Legacy)	**HM65**	**HL65678⑦**
400 (series-A)	**HM656A**	**HL656A⑩**
600 (Legacy)	**HM66**	**HL65678④**
600 (series-A)	**HM656A**	**HL66A⑩**
800	**HM67A**	⑨
1200	**HM678**	⑨
Non-Fusible 3-Pole 60-600A General Duty & 30-1200A Heavy Duty⑤⑧		
30 HD	**HH6123A⑦**	**HL612①**
60 GD	**HM6123**	**HL612①**
60 HD	**HH6123A⑦**	**HL612①**
100	**HM6123⑦**	**HL63①**
200	**HM64⑦**	**HL64①**
400 (Legacy)	**HM65**	**HL65678④**
400 (series-A)	**HM656A**	**HL56A⑩**
600 (Legacy)	**HM66**	**HL65678④**
600 (series-A)	**HM656A**	**HL56A⑩**
800	**HM67A**	⑨
1200	**HM678**	⑨

① Three lugs included in kit.
② Includes lugs.
③ Lugs not included.
④ One lug per kit.
⑤ One per switch required unless otherwise noted.
⑥ One required per pole.
⑦ For type 4/4X stainless steel switches add "S" to end of catalog number.
⑧ For replacement door for heavy duty switches add "DOOR" to end of switch catalog number.
⑨ Lugs included with base only, not available separately.
⑩ Lug caps only—2 line side caps and 2 load side caps per kit.

Typical Control with Wiring for R1 (120VAC) Option

TO CONNECT THE BATTERY LOWERING FOR HYDRAULIC ELEVATORS,CONNECT TO POINTS NC AND COM. REQUIRED FOR HYDRAULIC ELEVATORS WITH AUTO RECALL AND LOWERING TO MEET NEC 2023 SECTION 620.91(c)

AUXILIARY SWITCH LOGIC						
MAIN SWITCH	TB 10 & 11		TB 10 &11*		TB 13 & 14	
POSITION	NO	NC	NO	NC	NO	NC
CLOSED	O	C	O	C	O	C
TRIPPED	C	C	C	O	O	C
OPEN	C	O	C	O	C	O

*AUXILIARY SWITCH LOGIC WHEN YELLOW WIRE IS REMOVED FROM TERMINAL TB10 AND LOOSE END IS PROPERLY INSULATED.
WHERE LOCAL AUTHORITIES HAVING JURISDICTION PERMIT, FIELD REMOVAL OF THE YELLOW WIRE WILL CHANGE THE SWITCH LOGIC, SEE THE AUXILIARY SWITCH LOGIC TABLE, REMOVAL HAS THE EFFECT OF DISABLING THE BATTERY LOWERING DEVICE WHEN THE SWITCH IS IN THE TRIPPED POSITION. FIELD INSTALLER MUST ENSURE THIS MEETS ALL LOCAL CODES BEFORE REMOVAL.

INTERNAL DISC. SWITCH ACCESSORY IS SHOWN WITH MAIN SWITCH IN CLOSED (ON) POSITION

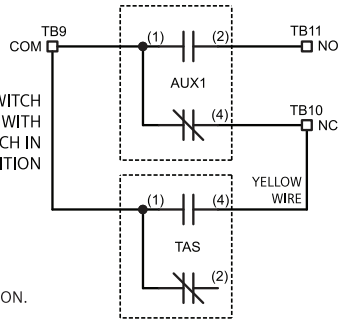

TO MONITOR THE VOLTAGE THE CONTROL WIRING TO MEET NFPA 72-2022 SECTION 21.4.4
FOR SPECIAL WIRING OF MULTIPLE SWITCHES TO AVOID FEEDBACK FROM PARALLELING CONTACTS. SEE LADDER DIAGRAM.
CONTACTS FOR "FR" ARE SHOWN IN THE DE-ENERGIZED POSITION.

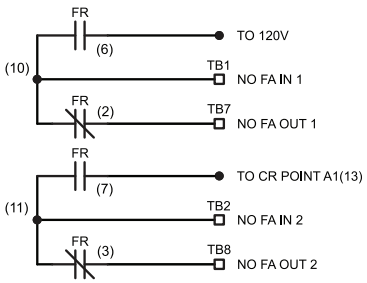

FIRE ALARM VOLTAGE MONITORING RELAY

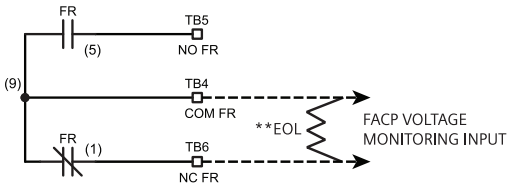

**COMMON CONNECTION WHEN NOT CONNECTING TO TB12, 13 AND 14. CONNECTION FOR WHEN A SUPERVISORY SIGNAL IS REQUIRED WHEN THE MAIN SWITCH IS IN THE OPEN POSITION SIGNAL, OR WHEN THE MAIN SWITCH IS CLOSED (ON) AND CONTROL POWER IS LOST.
CONTACTS FOR "FR" ARE SHOWN IN THE DE-ENERGIZED POSITION.

VOLTAGE MONITORING

THIS CIRCUIT CAN BE USED TO MAINTAIN A NORMAL STATUS SIGNAL TO THE FACP.
COM FR AND COM (B) ARE FACTORY BONDED WITH AN ORANGE JUMPER TO BYPASS THE VOLTAGE SUPERVISORY SIGNAL WHEN THE SWITCH IS MOVED TO THE OPEN "OFF" POSITION.
FIELD CONNECTION OF END OF LINE RESISTOR IS REQUIRED BETWEEN NC FR AND NC B FOR THIS FEATURE TO FUNCTION.
IF A SUPERVISORY SIGNAL IS REQUIRED WHEN THE SWITCH IS TURNED TO THE OFF POSITION. THE END OF LINE (EOL) RESISTOR MAY BE CONNECTED BETWEEN COM FR AND NC FR.
REMOVAL OF THE JUMPER IS ALLOWED IF THE AUTHORITY HAVING JURISDICTION DOES NOT REQUIRE THIS FUNCTIONALITY.
CONTACTS FOR "FR" ARE SHOWN IN THE DE-ENERGIZED POSITION.

EXTERNAL MICRO SWITCH IS SHOWN WITH MAIN SWITCH IN CLOSED (ON) POSITION

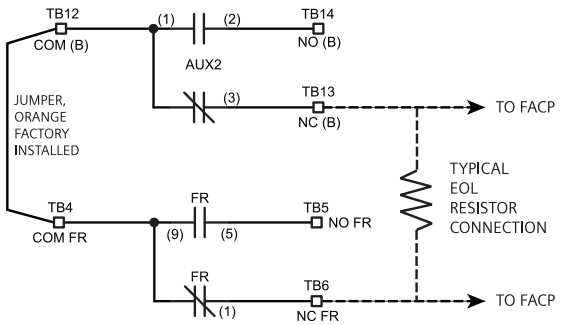

TYPICAL CONTROL POWER TRANSFORMER WIRING OPTIONS

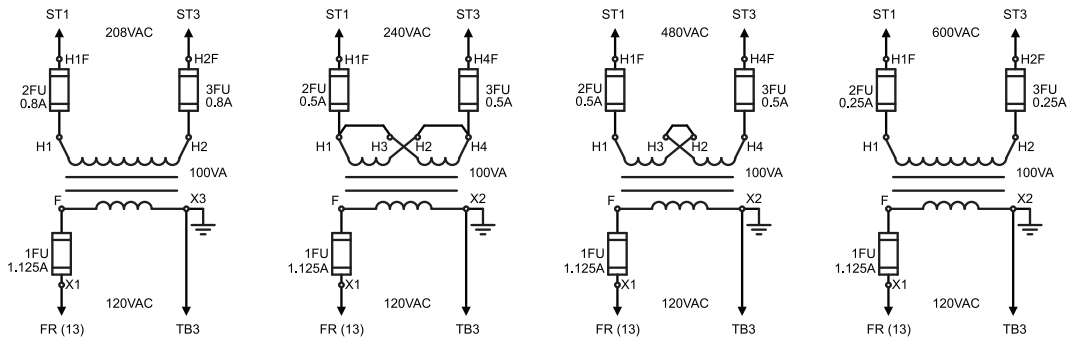

Typical Control with Wiring for R1 (120VAC) Option

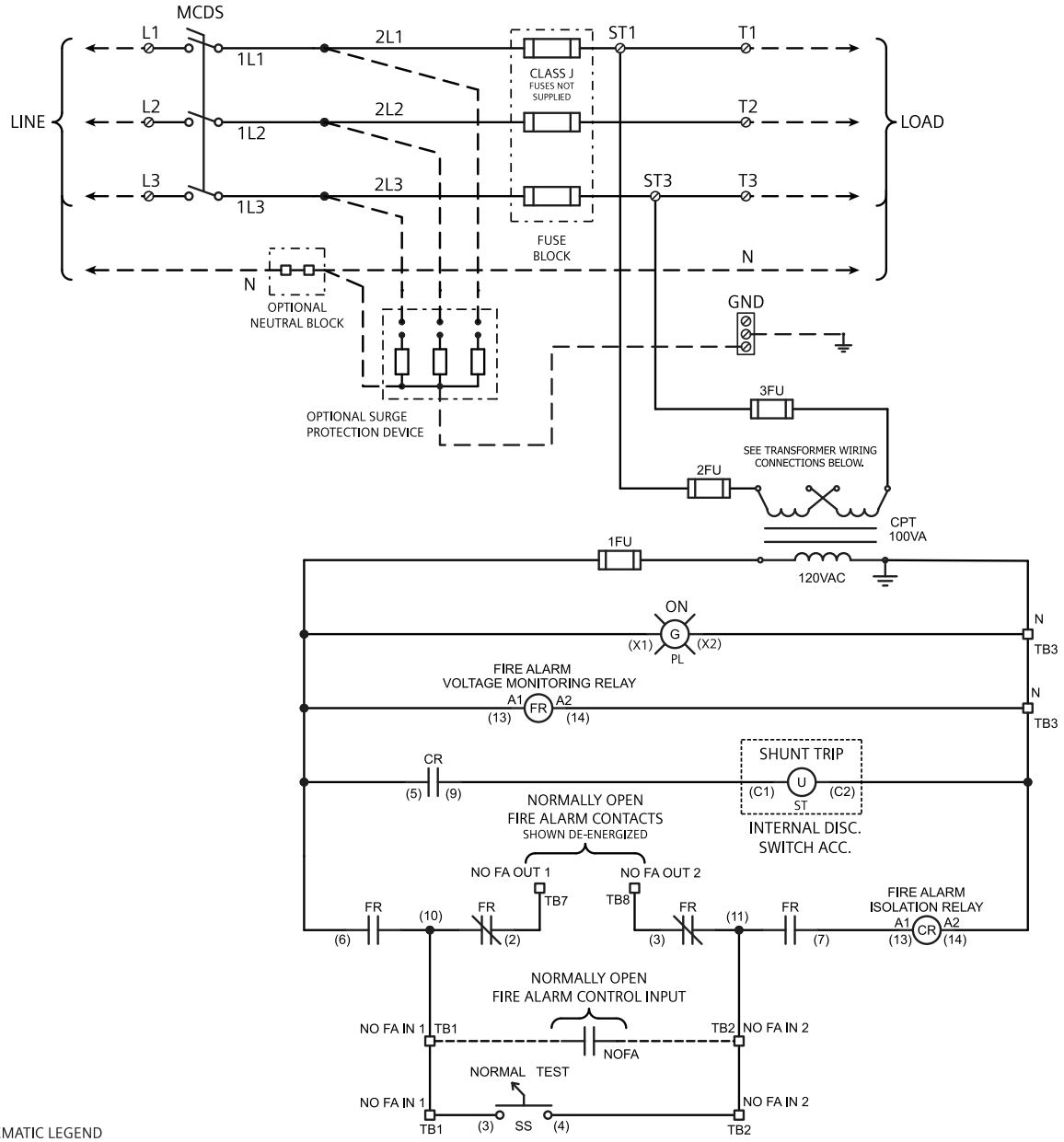

SCHEMATIC LEGEND
FACP - FIRE ALARM CONTROL PANEL.
NO FA IN - NORMALLY OPEN FIRE ALARM CONTROL INPUT.
NO FA - NORMALLY OPEN FIRE ALARM CONTACTS SUPPLIED FROM THE FIRE ALARM SYSTEM TO INITIATE THE SHUNT TRIP.
MCDS - MOLDED CASE DISCONNECT SWITCH
ST - SHUNT TRIP SOLENOID FOR REMOTE TRIP OF SWITCH, WHICH IS ACTIVATED BY THE CLOSING OF THE FIRE ALARM CONTACTS OR KEYED TEST SWITCH.
CR - CONTROL RELAY USED TO ISOLATE THE N.O.F.A. CONTACTS FROM THE DUTY OF THE SHUNT TRIP. MAX. CONTACT RATING 15A@300VAC.
FR - FIRE ALARM VOLTAGE MONITORING RELAY USED TO MONITOR THE STATUS OF THE CONTROL VOLTAGE FROM A REMOTE LOCATION (i.e. FIRE ALARM CONTROL PANEL). MAX. CONTACT RATING 15A@300VAC.
PL - PILOT LIGHT TO VISUALLY INDICATE PRESENCE OF VOLTAGE ON OUTSIDE OF SWITCH ENCLOSURE.
CPT - CONTROL POWER TRANSFORMER USED TO STEP DOWN LINE VOLTAGE TO 120VAC TO POWER SHUNT TRIP COIL.
TAS - TRIP/BELL ALARM SWITCH INTERNAL TO MAIN DISCONNECT SWITCH. MAX. CONTACT RATING 3A@300VAC.
AUX1 - AUXILARY CONTACTS INTERNAL TO MAIN DISCONNECT SWITCH. MAX. CONTACT RATING 3A@300VAC.
AUX2 - MICRO SWITCH CONTACTS EXTERNAL TO MAIN DISCONNECT SWITCH - CONTACT USED TO DISABLE BATTERY LOWERING DEVICE. MAX. CONTACT RATING 5.6A@125VAC.
SS - KEY-TO-TEST SWITCH USED TO OPERATE SHUNT TRIP FROM THE OUTSIDE OF SWITCH ENCLOSURE. CAN BE USED FOR TROUBLE-SHOOTING AND INSPECTION.

□ - TERMINAL BLOCK CONNECTION
● - PRE-WIRED CONNECTION POINTS.
---------- - DEVICE INTERNAL TO MOLDED CASE DISCONNECT SWITCH

Typical Control with Wiring for R2 (24VDC) Option

TO CONNECT THE BATTERY LOWERING FOR HYDRAULIC ELEVATORS,CONNECT TO POINTS NC AND COM. REQUIRED FOR HYDRAULIC ELEVATORS WITH AUTO RECALL AND LOWERING TO MEET NEC 2023 SECTION 620.91(c)

AUXILIARY SWITCH LOGIC						
MAIN SWITCH	TB 10 & 11		TB 10 &11*		TB 13 & 14	
POSITION	NO	NC	NO	NC	NO	NC
CLOSED	O	C	O	C	O	C
TRIPPED	C	C	C	O	O	C
OPEN	C	O	C	O	C	O

*AUXILIARY SWITCH LOGIC WHEN YELLOW WIRE IS REMOVED FROM TERMINAL TB10 AND LOOSE END IS PROPERLY INSULATED.
WHERE LOCAL AUTHORITIES HAVING JURISDICTION PERMIT, FIELD REMOVAL OF THE YELLOW WIRE WILL CHANGE THE SWITCH LOGIC, SEE THE AUXILIARY SWITCH LOGIC TABLE, REMOVAL HAS THE EFFECT OF DISABLING THE BATTERY LOWERING DEVICE WHEN THE SWITCH IS IN THE TRIPPED POSITION. FIELD INSTALLER MUST ENSURE THIS MEETS ALL LOCAL CODES BEFORE REMOVAL.

INTERNAL DISC. SWITCH ACCESSORY IS SHOWN WITH MAIN SWITCH IN CLOSED (ON) POSITION

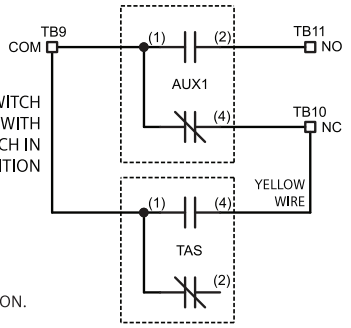

TO MONITOR THE VOLTAGE THE CONTROL WIRING TO MEET NFPA 72-2022 SECTION 21.4.4
FOR SPECIAL WIRING OF MULTIPLE SWITCHES TO AVOID FEEDBACK FROM PARALLELING CONTACTS. SEE LADDER DIAGRAM.
CONTACTS FOR "FR" ARE SHOWN IN THE DE-ENERGIZED POSITION.

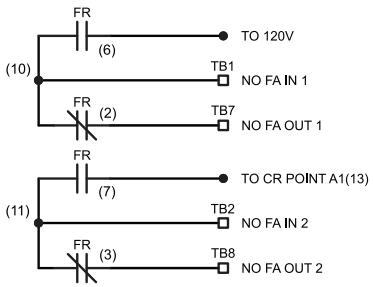

FIRE ALARM VOLTAGE MONITORING RELAY

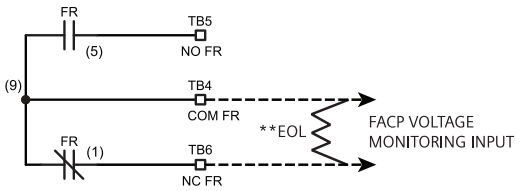

**COMMON CONNECTION WHEN NOT CONNECTING TO TB12, 13 AND 14. CONNECTION FOR WHEN A SUPERVISORY SIGNAL IS REQUIRED WHEN THE MAIN SWITCH IS IN THE OPEN POSITION SIGNAL, OR WHEN THE MAIN SWITCH IS CLOSED (ON) AND CONTROL POWER IS LOST.
CONTACTS FOR "FR" ARE SHOWN IN THE DE-ENERGIZED POSITION.

VOLTAGE MONITORING

THIS CIRCUIT CAN BE USED TO MAINTAIN A NORMAL STATUS SIGNAL TO THE FACP.
COM FR AND COM (B) ARE FACTORY BONDED WITH AN ORANGE JUMPER TO BYPASS THE VOLTAGE SUPERVISORY SIGNAL WHEN THE SWITCH IS MOVED TO THE OPEN "OFF" POSITION.
FIELD CONNECTION OF END OF LINE RESISTOR IS REQUIRED BETWEEN NC FR AND NC B FOR THIS FEATURE TO FUNCTION.
IF A SUPERVISORY SIGNAL IS REQUIRED WHEN THE SWITCH IS TURNED TO THE OFF POSITION. THE END OF LINE (EOL) RESISTOR MAY BE CONNECTED BETWEEN COM FR AND NC FR.
REMOVAL OF THE JUMPER IS ALLOWED IF THE AUTHORITY HAVING JURISDICTION DOES NOT REQUIRE THIS FUNCTIONALITY.
CONTACTS FOR "FR" ARE SHOWN IN THE DE-ENERGIZED POSITION.

EXTERNAL MICRO SWITCH IS SHOWN WITH MAIN SWITCH IN CLOSED (ON) POSITION

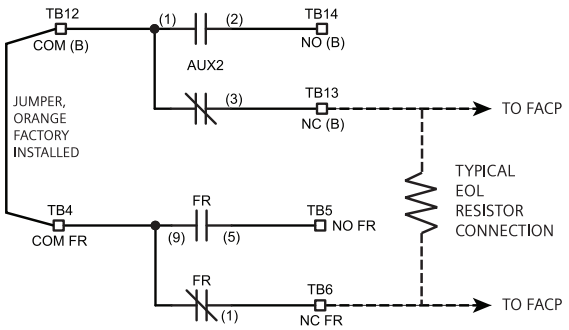

TYPICAL CONTROL POWER TRANSFORMER WIRING OPTIONS

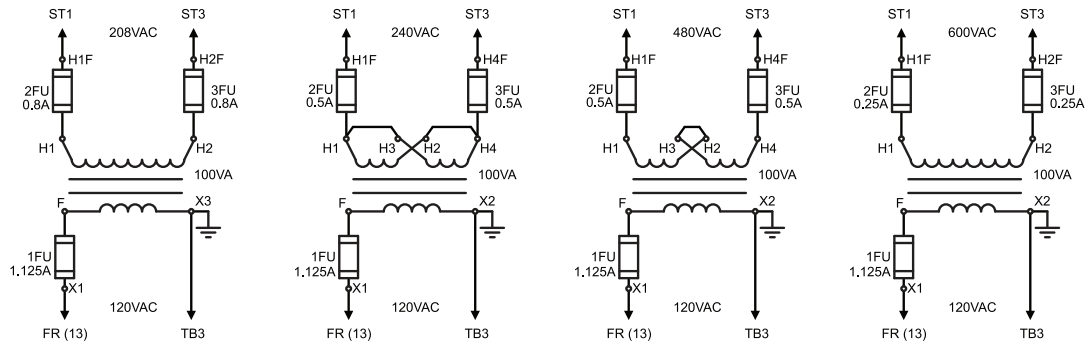

Typical Control with Wiring for R2 (24VDC) Option

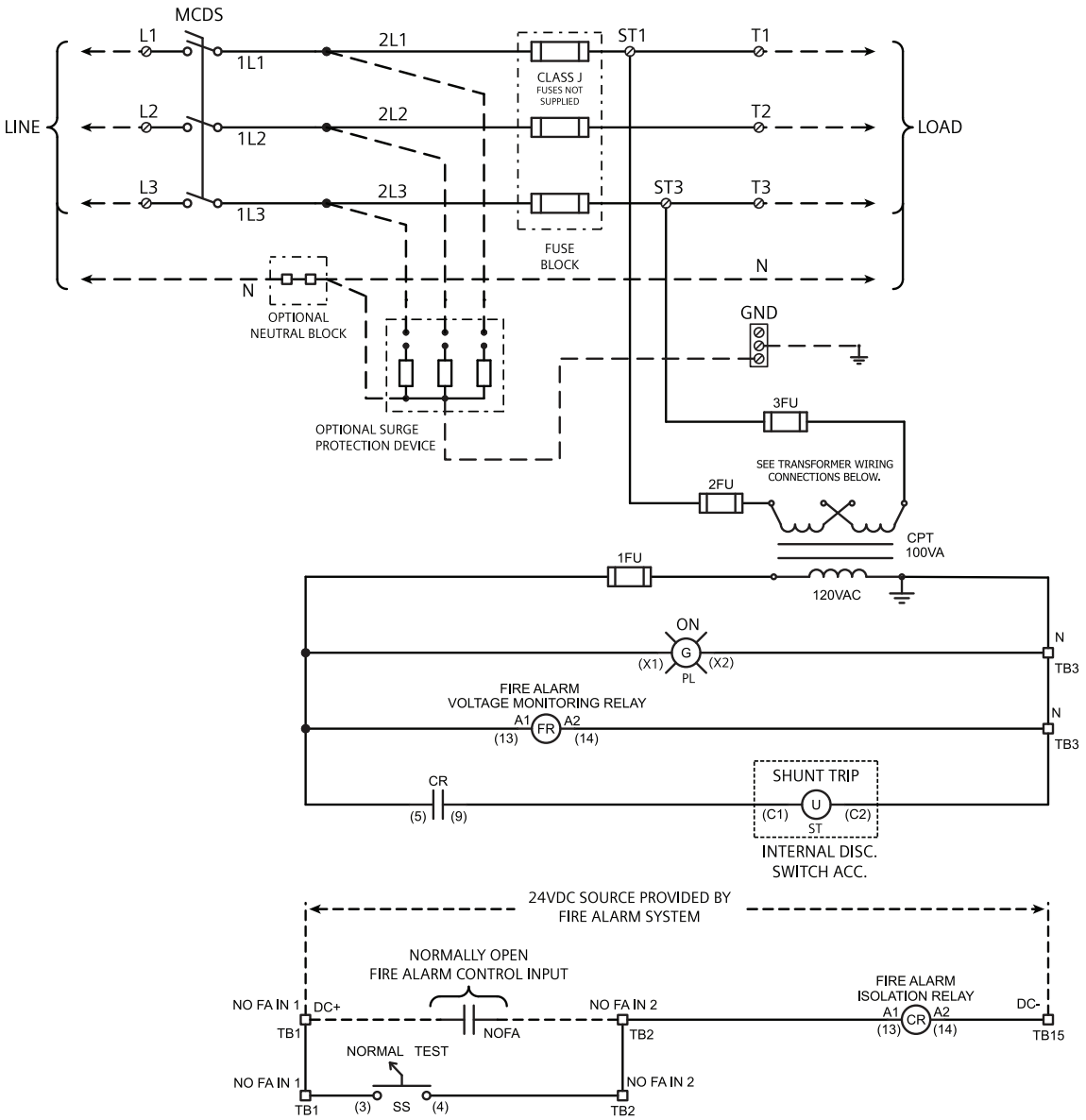

SCHEMATIC LEGEND
FACP - FIRE ALARM CONTROL PANEL.
NO FA IN - NORMALLY OPEN FIRE ALARM CONTROL INPUT.
NO FA - NORMALLY OPEN FIRE ALARM CONTACTS SUPPLIED FROM THE FIRE ALARM SYSTEM TO INITIATE THE SHUNT TRIP.
MCDS - MOLDED CASE DISCONNECT SWITCH
ST - SHUNT TRIP SOLENOID FOR REMOTE TRIP OF SWITCH, WHICH IS ACTIVATED BY THE CLOSING OF THE FIRE ALARM CONTACTS OR KEYED TEST SWITCH.
CR - CONTROL RELAY USED TO ISOLATE THE N.O.F.A. CONTACTS FROM THE DUTY OF THE SHUNT TRIP. MAX. CONTACT RATING 15A@300VAC.
FR - FIRE ALARM VOLTAGE MONITORING RELAY USED TO MONITOR THE STATUS OF THE CONTROL VOLTAGE FROM A REMOTE LOCATION (i.e. FIRE ALARM CONTROL PANEL). MAX. CONTACT RATING 15A@300VAC.
PL - PILOT LIGHT TO VISUALLY INDICATE PRESENCE OF VOLTAGE ON OUTSIDE OF SWITCH ENCLOSURE.
CPT - CONTROL POWER TRANSFORMER USED TO STEP DOWN LINE VOLTAGE TO 120VAC TO POWER SHUNT TRIP COIL.
TAS - TRIP/BELL ALARM SWITCH INTERNAL TO MAIN DISCONNECT SWITCH. MAX. CONTACT RATING 3A@300VAC.
AUX1 - AUXILARY CONTACTS INTERNAL TO MAIN DISCONNECT SWITCH. MAX. CONTACT RATING 3A@300VAC.
AUX2 - MICRO SWITCH CONTACTS EXTERNAL TO MAIN DISCONNECT SWITCH - CONTACT USED TO DISABLE BATTERY LOWERING DEVICE. MAX. CONTACT RATING 5.6A@125VAC.
SS - KEY-TO-TEST SWITCH USED TO OPERATE SHUNT TRIP FROM THE OUTSIDE OF SWITCH ENCLOSURE. CAN BE USED FOR TROUBLE-SHOOTING AND INSPECTION.

□ - TERMINAL BLOCK CONNECTION
● - PRE-WIRED CONNECTION POINTS.
---------- - DEVICE INTERNAL TO MOLDED CASE DISCONNECT SWITCH

Typical Control with Wiring Options for Fire Safety Interface

Options R1 & F3

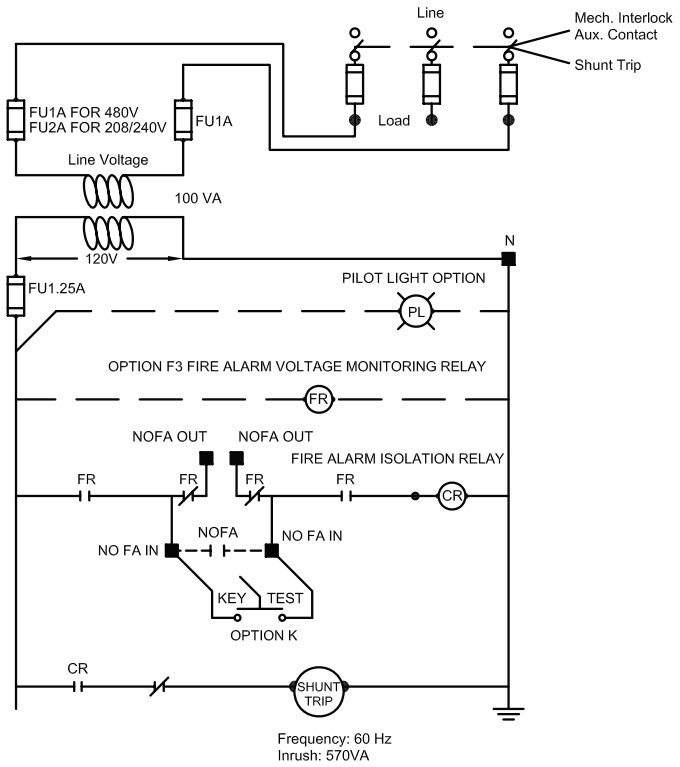

Frequency: 60 Hz
Inrush: 570VA

Option R2

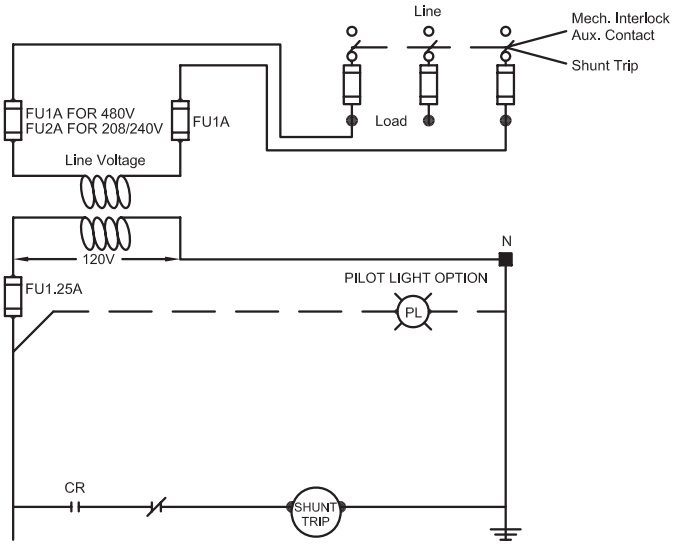

Frequency: 60 Hz
Inrush: 570VA

AUXILIARY SWITCH LOGIC						
MAIN SWITCH	OPTION A		OPTION B		OPTION A *	
POSITION	NO	NC	NO	NC	NO	NC
CLOSED	O	C	O	C	O	C
TRIPPED	C	C	O	C	C	O
OPEN	C	O	C	O	C	O

* AUXILIARY SWITCH LOGIC WHEN BLUE WIRE WITH "+" MARKER IS REMOVED FROM NC TERMINAL

WHERE LOCAL AUTHORITIES HAVING JURISDICTION PERMIT, FIELD REMOVAL OF THE BLUE WIRE IDENTIFIED BY "+" MARKER WILL CHANGE THE OPTION A SWITCH LOGIC, SEE THE AUXILARY SWITCH LOGIC TABLE, REMOVAL HAS THE EFFECT OF DISABLING THE BATTERY LOWERING DEVICE WHEN THE SWITCH IS IN THE TRIPPED POSITION. FIELD INSTALLER MUST ENSURE THIS MEETS ALL LOCAL CODES BEFORE REMOVAL.

LEGEND:
FACP - FIRE ALARM CONTROL PANEL
NOFAIN - NORMALLY OPEN FIRE ALARM CONTROL INPUT.
NOFA - NORMALLY OPEN FIRE ALARM CONTACTS SUPPLIED FROM THE FIRE ALARM SYSTEM TO INITIATE THE SHUNT TRIP.
SHUNT TRIP - SOLENOID FOR REMOTE TRIP OF SWITCH, WHICH IS ACTIVATED BY THE CLOSING OF THE FIRE ALARM CONTACTS OR KEY TEST SWITCH.
OPTION R1 - FIRE ALARM INTERFACE RELAY THAT IS OPERATED AT 120VAC FROM SECONDARY OF TRANSFORMER. NO ADDITIONAL POWER NEEDED.
CR - CONTROL RELAY USED TO ISOLATE THE N.O.F.A. CONTACTS FROM THE DUTY OF THE SHUNT TRIP.
FR - FIRE ALARM VOLTAGE MONITORING RELAY USED TO MONITOR THE STATUS OF CONTROL VOLTAGE FROM A REMOTE LOCATION (i.e. FIRE ALARM CONTROL PANEL).
PL - PILOT LIGHT TO VISUALLY INDICATE PRESENCE OF VOLTAGE ON OUTSIDE OF SWITCH ENCLOSURE.
CPT - CONTROL POWER TRANSFORMER USED TO STEP DOWN LINE VOLTAGE TO 120VAC TO POWER SHUNT TRIP COIL.
SW AUX. - OPTION A OR B, NORMALLY CLOSED CONTACT WHEN SWITCH IS CLOSED. OPENS AS POWER SWITCH OPENS.
KEY TEST - KEY-TO-TEST SWITCH USED TO OPERATE SHUNT TRIP FROM THE OUTSIDE OF SWITCH ENCLOSURE. CAN BE USED FOR TROUBLE-SHOOTING AND INSPECTION.
MECHANICALLY INTERLOCKED AUXILIARY CONTACT - CONTACT USED TO DISABLE BATTERY LOWERING DEVICE.
■ - TERMINAL BLOCK CONNECTION POINT.
● - PRE-WIRED CONNECTION POINTS.

Typical Control with Wiring Options for Fire Safety Interface

Options R1 & F1

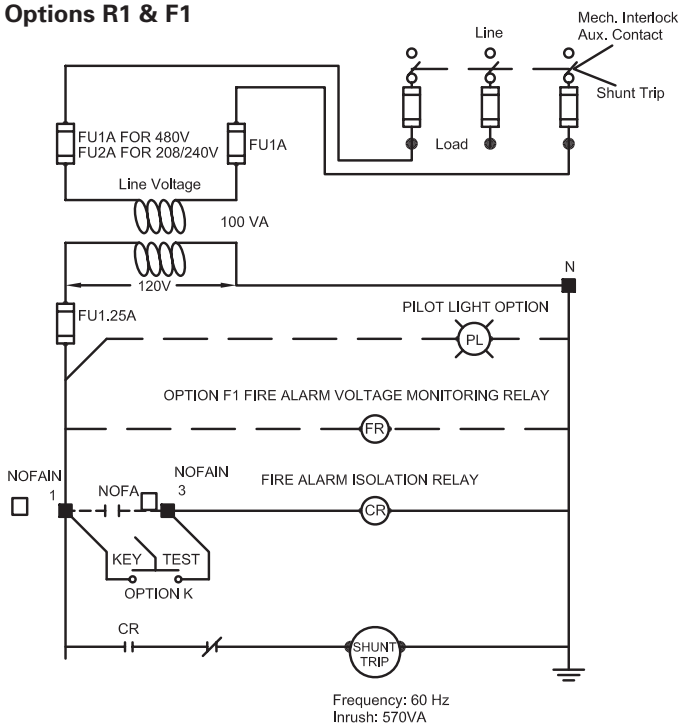

Options R2 & F1

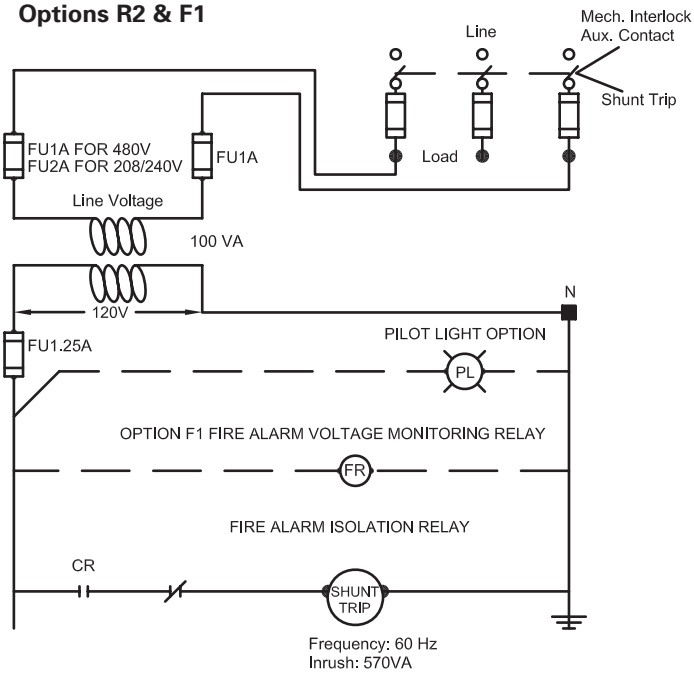

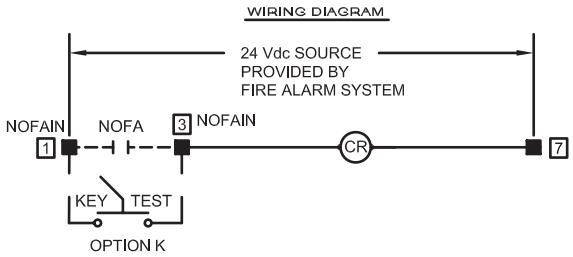

AUXILIARY SWITCH LOGIC						
MAIN SWITCH	OPTION A		OPTION B		OPTION A *	
POSITION	NO	NC	NO	NC	NO	NC
CLOSED	O	C	O	C	O	C
TRIPPED	C	C	O	C	C	O
OPEN	C	O	C	O	C	O

* AUXILIARY SWITCH LOGIC WHEN BLUE WIRE WITH "+" MARKER IS REMOVED FROM NC TERMINAL

WHERE LOCAL AUTHORITIES HAVING JURISDICTION PERMIT, FIELD REMOVAL OF THE BLUE WIRE IDENTIFIED BY "+" MARKER WILL CHANGE THE OPTION A SWITCH LOGIC, SEE THE AUXILARY SWITCH LOGIC TABLE, REMOVAL HAS THE EFFECT OF DISABLING THE BATTERY LOWERING DEVICE WHEN THE SWITCH IS IN THE TRIPPED POSITION. FIELD INSTALLER MUST ENSURE THIS MEETS ALL LOCAL CODES BEFORE REMOVAL.

LEGEND:
FACP - FIRE ALARM CONTROL PANEL
NOFAIN - NORMALLY OPEN FIRE ALARM CONTROL INPUT.
NOFA - NORMALLY OPEN FIRE ALARM CONTACTS SUPPLIED FROM THE FIRE ALARM SYSTEM TO INITIATE THE SHUNT TRIP.
SHUNT TRIP - SOLENOID FOR REMOTE TRIP OF SWITCH, WHICH IS ACTIVATED BY THE CLOSING OF THE FIRE ALARM CONTACTS OR KEY TEST SWITCH.
OPTION R1 - FIRE ALARM INTERFACE RELAY THAT IS OPERATED AT 120VAC FROM SECONDARY OF TRANSFORMER. NO ADDITIONAL POWER NEEDED.
CR - CONTROL RELAY USED TO ISOLATE THE N.O.F.A. CONTACTS FROM THE DUTY OF THE SHUNT TRIP.
FR - FIRE ALARM VOLTAGE MONITORING RELAY USED TO MONITOR THE STATUS OF CONTROL VOLTAGE FROM A REMOTE LOCATION (i.e. FIRE ALARM CONTROL PANEL).
PL - PILOT LIGHT TO VISUALLY INDICATE PRESENCE OF VOLTAGE ON OUTSIDE OF SWITCH ENCLOSURE.
CPT - CONTROL POWER TRANSFORMER USED TO STEP DOWN LINE VOLTAGE TO 120VAC TO POWER SHUNT TRIP COIL.
SW AUX. - OPTION A OR B, NORMALLY CLOSED CONTACT WHEN SWITCH IS CLOSED. OPENS AS POWER SWITCH OPENS.
KEY TEST - KEY-TO-TEST SWITCH USED TO OPERATE SHUNT TRIP FROM THE OUTSIDE OF SWITCH ENCLOSURE. CAN BE USED FOR TROUBLE-SHOOTING AND INSPECTION.
MECHANICALLY INTERLOCKED AUXILIARY CONTACT - CONTACT USED TO DISABLE BATTERY LOWERING DEVICE.
■ - TERMINAL BLOCK CONNECTION POINT.
● - PRE-WIRED CONNECTION POINTS.

Typical Control with Wiring Options for Fire Safety Interface

Option F1

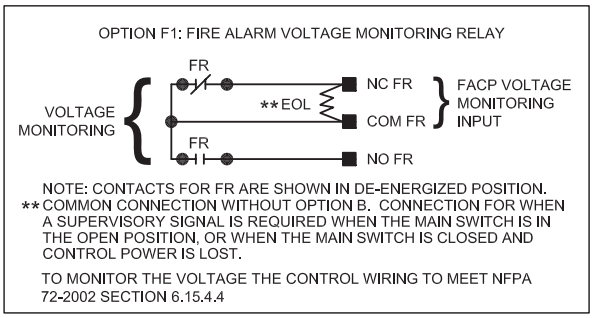

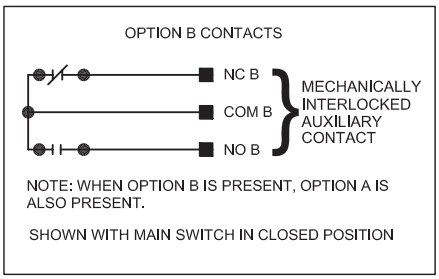

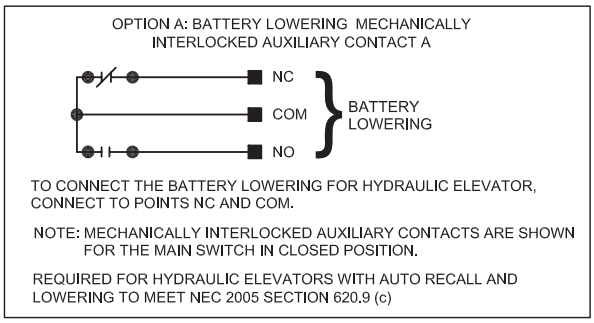

Option F3

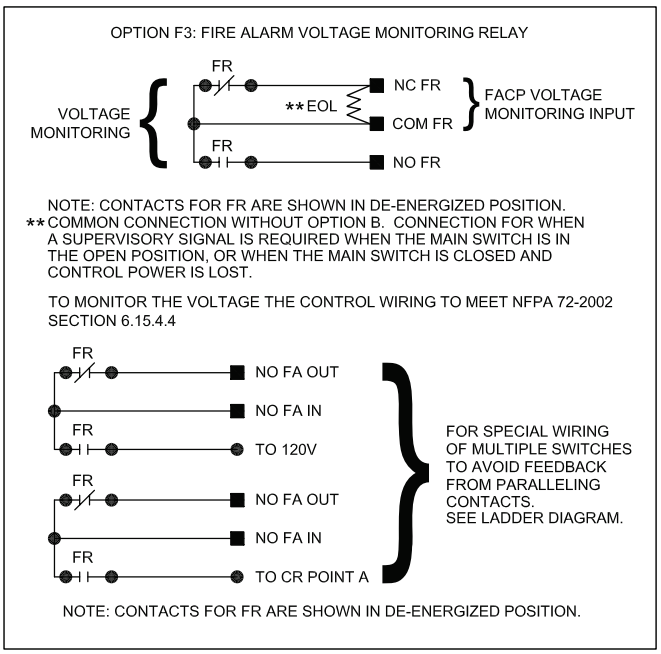

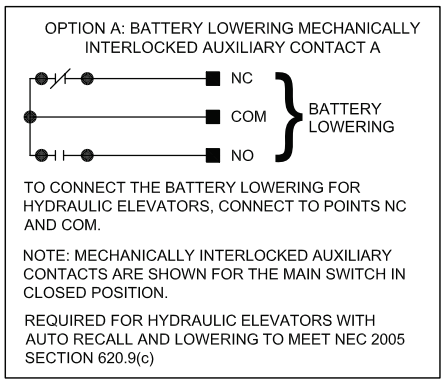

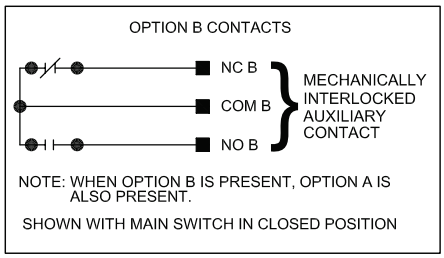

LEGEND:
FACP - FIRE ALARM CONTROL PANEL
NOFAIN - NORMALLY OPEN FIRE ALARM CONTROL INPUT.
NOFA - NORMALLY OPEN FIRE ALARM CONTACTS SUPPLIED FROM THE FIRE ALARM SYSTEM TO INITIATE THE SHUNT TRIP.
SHUNT TRIP - SOLENOID FOR REMOTE TRIP OF SWITCH, WHICH IS ACTIVATED BY THE CLOSING OF THE FIRE ALARM CONTACTS OR KEY TEST SWITCH.
OPTION R1 - FIRE ALARM INTERFACE RELAY THAT IS OPERATED AT 120VAC FROM SECONDARY OF TRANSFORMER. NO ADDITIONAL POWER NEEDED.
CR - CONTROL RELAY USED TO ISOLATE THE N.O.F.A. CONTACTS FROM THE DUTY OF THE SHUNT TRIP.
FR - FIRE ALARM VOLTAGE MONITORING RELAY USED TO MONITOR THE STATUS OF CONTROL VOLTAGE FROM A REMOTE LOCATION (i.e. FIRE ALARM CONTROL PANEL).
PL - PILOT LIGHT TO VISUALLY INDICATE PRESENCE OF VOLTAGE ON OUTSIDE OF SWITCH ENCLOSURE.
CPT - CONTROL POWER TRANSFORMER USED TO STEP DOWN LINE VOLTAGE TO 120VAC TO POWER SHUNT TRIP COIL.
SW AUX. - OPTION A OR B, NORMALLY CLOSED CONTACT WHEN SWITCH IS CLOSED. OPENS AS POWER SWITCH OPENS.
KEY TEST - KEY-TO-TEST SWITCH USED TO OPERATE SHUNT TRIP FROM THE OUTSIDE OF SWITCH ENCLOSURE. CAN BE USED FOR TROUBLE-SHOOTING AND INSPECTION.
MECHANICALLY INTERLOCKED AUXILIARY CONTACT - CONTACT USED TO DISABLE BATTERY LOWERING DEVICE.
■ - TERMINAL BLOCK CONNECTION POINT.
● - PRE-WIRED CONNECTION POINTS.

NOTE: TERMINAL 1 IS NOT PRESENT WHEN OPTION K IS ABSENT.

With optional control power transformer

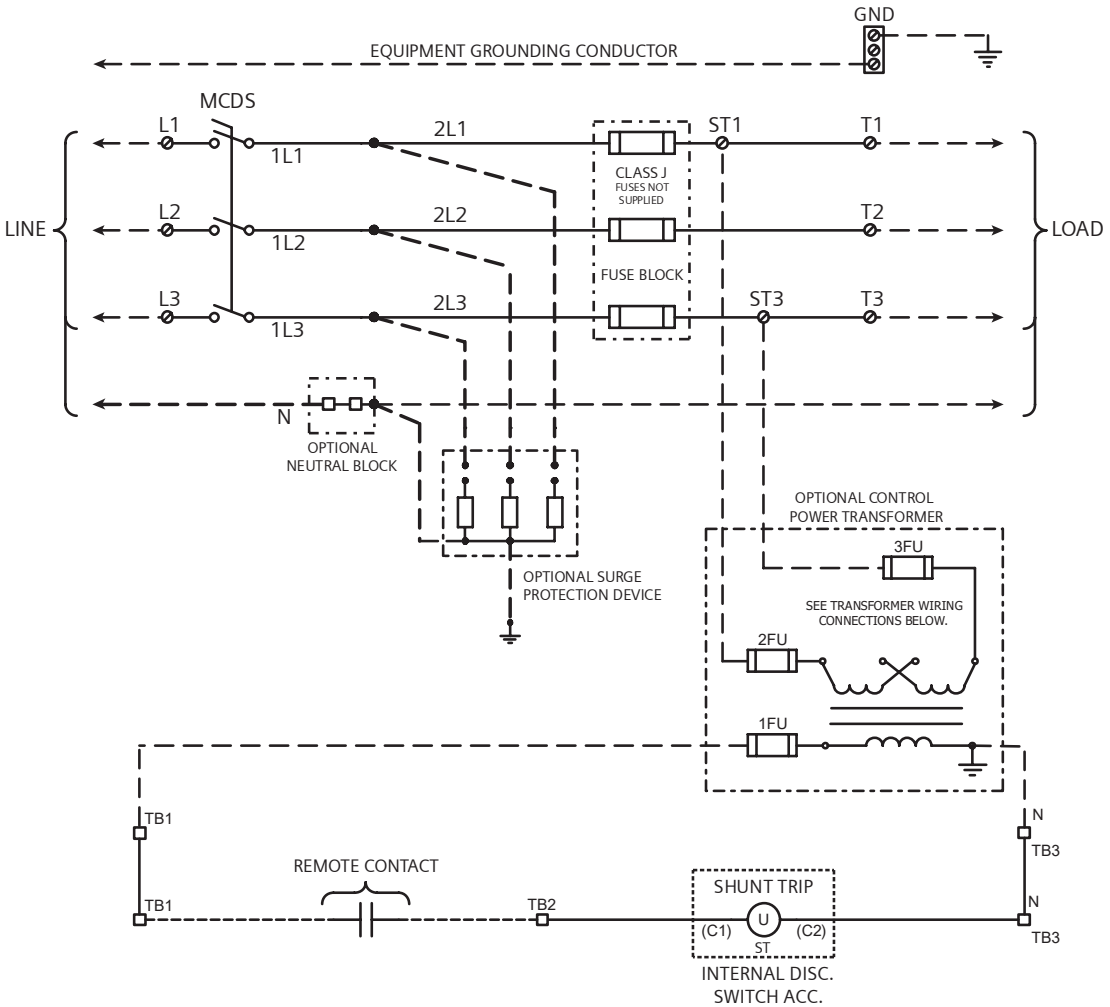

TYPICAL CONTROL POWER TRANSFORMER WIRING OPTIONS

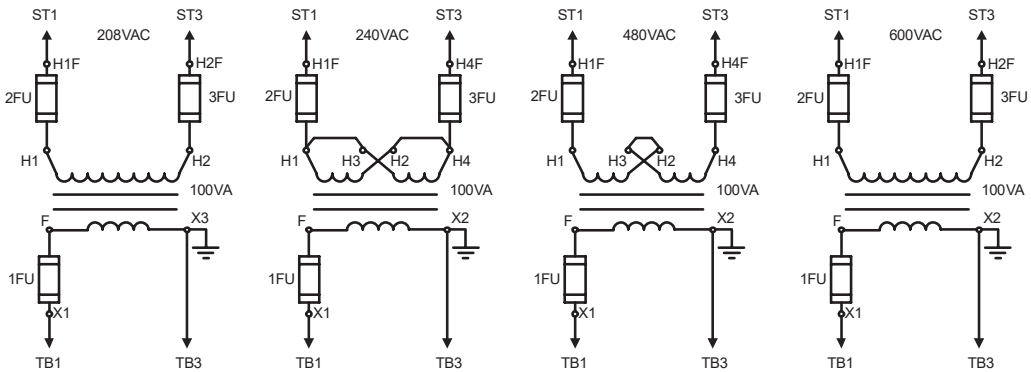

CONTROL POWER TRANSFORMER
MAX. FUSE AMPERAGE TABLE

100VA XFMR					
600V CLASS CC				250V TYPE TRM OR EQUIV.	
PRIMARY VOLTAGE				SECONDARY VOLTAGE	
208	240	480	600		
2.25	2	1	0.8	24VAC	6.25
				120VAC	1.3
2,3FU (AMPS)				1FU (AMPS)	

Refer to next page for schematic legends and notes.

With externally supplied control power

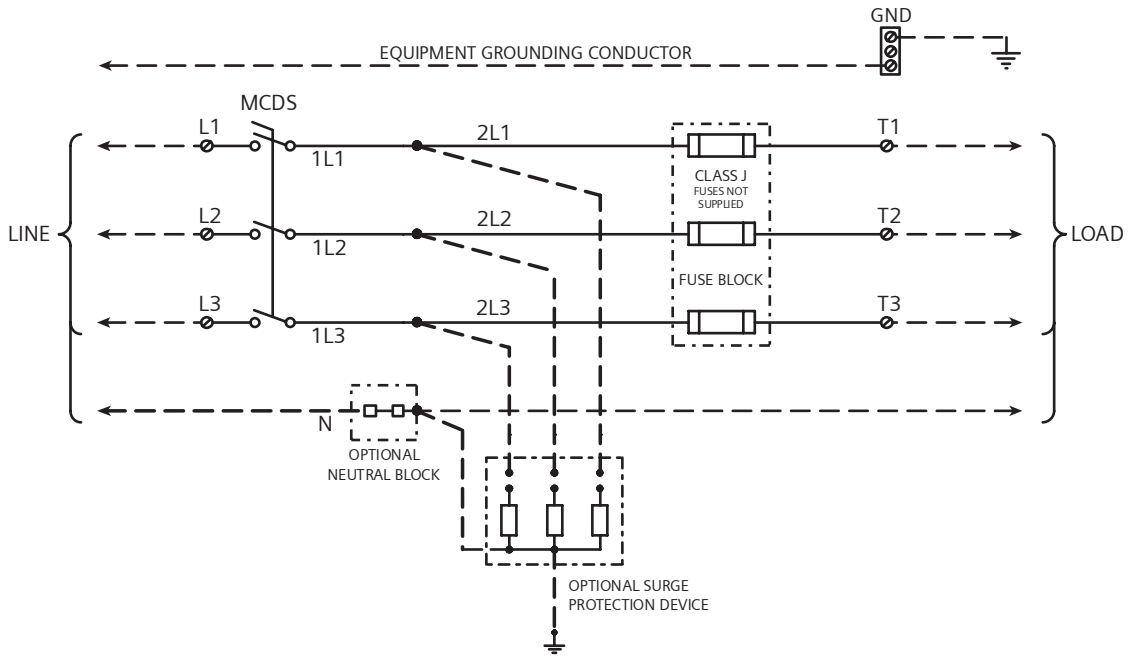

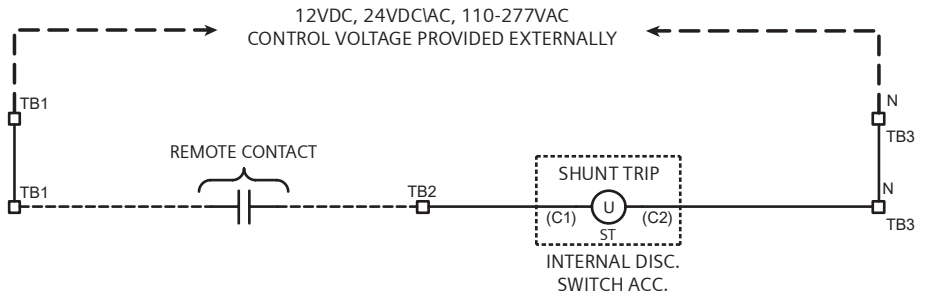

OPTIONAL SERVICE ENTRANCE PROVISIONS

FOR SERVICE ENTRANCE PURPOSES IN THE U.S. ONLY, THE CONTROLLER IS INTENDED FOR 4-WIRE, 3 PHASE SYSTEM (GROUNDED CENTER POINT OF WYE OR GROUNDED MID POINT OF ONE PHASE OF DELTA), WITHOUT PROVISIONS FOR A LOAD NEUTRAL AND THE LOAD IS CONNECTED LINE-TO-LINE.
REFER TO RATING LABEL FOR OPTIONAL NEUTRAL KIT FOR LINE TO NEUTRAL CONNECTIONS.
INSTALL SERVICE BARRIER KIT, (NOT INCLUDED) OVER LINE SIDE LUGS.
REFER TO TABLE BELOW FOR REQUIRED SERVICE LINE BARRIER KIT.

ENCLOSURE SIZE	LINE SIDE BARRIER KIT	w\ PROBE HOLES
30-100A	3VA9131-0WD30	3VA9131-0WD31
200-400A	3VA9471-0WD30	3VA9471-0WD31

SCHEMATIC LEGEND
MCDS - MOLDED CASE DISCONNECT SWITCH.
ST - SHUNT TRIP SOLENOID FOR REMOTE TRIP OF SWITCH, WHICH IS ACTIVATED BY THE CLOSING OF THE REMOTE CONTACT.
CPT - CONTROL POWER TRANSFORMER USED TO STEP DOWN LINE VOLTAGE TO 120VAC TO POWER SHUNT TRIP COIL.

□ - TERMINAL BLOCK CONNECTION.
● - PRE-WIRED CONNECTION POINTS.
---------- - DEVICE INTERNAL TO MOLDED CASE DISCONNECT SWITCH.

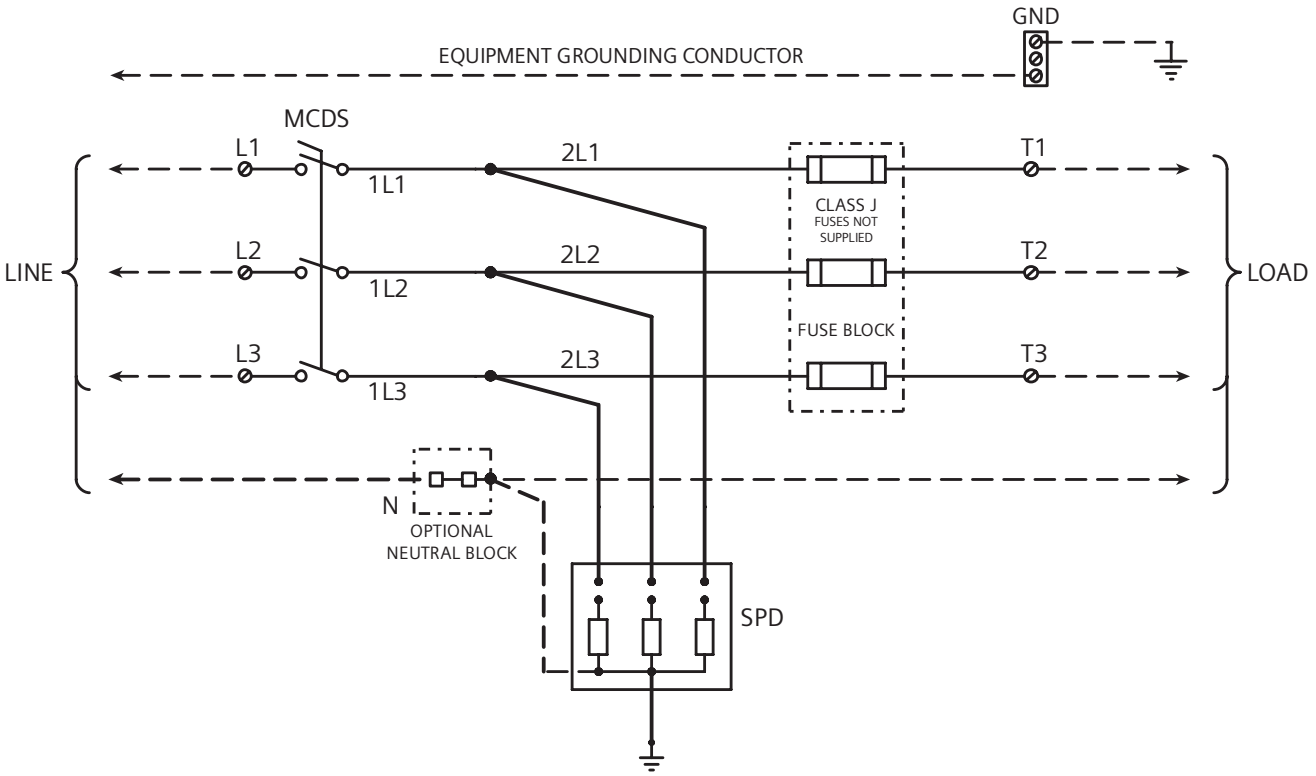

OPTIONAL SERVICE ENTRANCE PROVISIONS

FOR SERVICE ENTRANCE PURPOSES IN THE U.S. ONLY, THE CONTROLLER IS INTENDED FOR 4-WIRE, 3 PHASE SYSTEM (GROUNDED CENTER POINT OF WYE OR GROUNDED MID POINT OF ONE PHASE OF DELTA), WITHOUT PROVISIONS FOR A LOAD NEUTRAL AND THE LOAD IS CONNECTED LINE-TO-LINE.
REFER TO RATING LABEL FOR OPTIONAL NEUTRAL KIT FOR LINE TO NEUTRAL CONNECTIONS.
INSTALL SERVICE BARRIER KIT, (NOT INCLUDED) OVER LINE SIDE LUGS.
REFER TO TABLE BELOW FOR REQUIRED SERVICE LINE BARRIER KIT.

ENCLOSURE SIZE	LINE SIDE BARRIER KIT	w\ PROBE HOLES
30-100A	3VA9131-0WD30	3VA9131-0WD31
200-400A	3VA9471-0WD30	3VA9471-0WD31

SCHEMATIC LEGEND
MCDS - MOLDED CASE DISCONNECT SWITCH
SPD - SURGE PROTECTION DEVICE
□ - NEUTRAL TERMINAL BLOCK CONNECTION
● - PRE-WIRED CONNECTION POINTS.

Load switching devices for all applications

Fuseless switch disconnectors









	Type	3LD3	3LD2	3LD5 UL
	Rated current I_n	16 ... 63 A	16 ... 250 A	30 ... 160 A
	Short-circuit current max.	6 kA	50 kA	50 kA
Selection acc. to utilization category	AC max.	AC-3	AC-3	AC-3
	DC max.	–	DC-22A	–
	Suitable fuses	–	–	–
Types of mounting	Panel mounting	■	■	■
	Mounting on a standard mounting rail	■	■ (up to 125 A)	■ (up to 63 A)
	Front mounting	■	■	■
	Mounting on busbar systems (spacing of the busbars)	–	–	–
	Draw-out technology	–	–	–
Methods of operation	Manual from the front	■	■	■
	Manual from the side	–	–	–
	Remote-controllable	–	–	–
Number of poles	1-pole	–	–	–
	2-pole	–	–	–
	3-pole	■	■	■
	4-pole	■	■	■
	6-pole	–	■	–
Switching function	All poles	■	■	■
	Individual poles switchable	–	–	–

3LD switch disconnectors

Quick select guide







Type			3LD30	3LD31	3LD32	3LD33	3LD34	3LD20	3LD21	3LD22	3LD25	3LD27
General technical specifications acc. to UL												
General technical specifications												
Certification according to UL standard					UL 508					UL 508		
I_n acc. to UL 508/UL60947-4-1 | UL489		A	16|–	25|–	32|–	40|–	63|–	16|–	25|–	32|–	63|–	100|–
U_e acc. to UL 508/UL60947-4-1 | UL489		V AC			600|–					600|–		
Operating and short-circuit behavior												
Operational power, 3-phase	At 480 V	hp	7.5	10	20	20	25	7.5	10	20	40	60
	At 600 V	hp	10	15	20	20	30	10	15	20	50	75
Short circuit current rating (SCCR)	At 480 V | at 600 V	kA			5|5			5|5	5|5	5|5	5|5	10|10
Upstream fuse according to UL					RK5					RK5		
For IEC ratings, reference document in Industry Mall or Global LV10 catalog												







Type			3LD28	3LD23	3LD24	3LD50	3LD52	3LD54	3LD56	3LD58
General technical specifications acc. to UL										
General technical specifications										
Certification according to UL standard				UL 508			UL60947-4-1 / UL489			
I_n acc. to UL 508/UL60947-4-1 | UL489		A	125|–	160|–	250|–	30|30	60|60	100|100	125|125	150|150
U_e acc. to UL 508/UL60947-4-1 | UL489		V AC		600|–				480|480		
Operating and short-circuit behavior										
Operational power, 3-phase	At 480 V	hp	75	75	100	20	30	60	75	100
	At 600 V	hp	100	50	75	–	–	–	–	–
Short circuit current rating (SCCR)	At 480 V | at 600 V	kA	10|10	10|10	10|10	50|–	65|–	65|–	65|–	50|–
Upstream fuse according to UL				RK5		J|CC	J	J	J	J
For IEC ratings, reference document in Industry Mall or Global LV10 catalog										

3LD switch disconnectors

System overview of 3LD3 main control and EMERGENCY-STOP switches

Basic units for front mounting

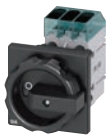

3P rotary operating mechanisms



3P knob-operated mechanisms



3P+N rotary operating mechanisms



3P+N knob-operated mechanisms

Basic units for panel mounting



3P rotary operating mechanisms



3P knob-operated mechanisms



3P+N rotary operating mechanisms



3P+N knob-operated mechanisms

Basic units for installation in distribution boards



3P knob-operated mechanisms



3P basic switches without knob-operated mechanism



3P+N knob-operated mechanisms



3P+N basic switches without knob-operated mechanism

Additional poles and auxiliary switches



N switching contacts



N/PE terminals



Auxiliary switches

Operating mechanisms





Rotary operating mechanisms for front or panel mounting (center hole)





Knob-operated mechanisms for front or panel mounting (center hole)



Door-coupling rotary operating mechanisms



Door-coupling knob-operated mechanisms

Other accessories



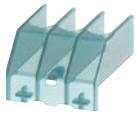

Terminal covers, 1 and 3-pole





Inscription labels

Note: You will find a detailed range of accessories with the basic units.

Mounting concept and accessories

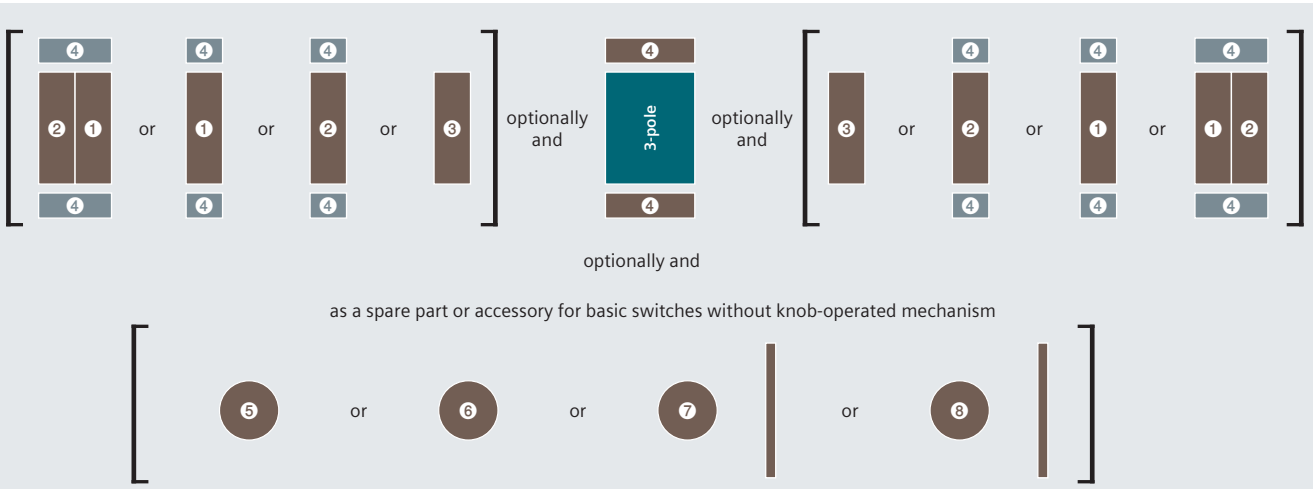

Legend

❶ N switching contact [1)]
❷ N/PE terminal
❸ Auxiliary switch
❹ Terminal cover
❺ Rotary operating mechanism, center-hole mounting
❻ Knob-operated mechanism, center-hole mounting
❼ Door-coupling rotary operating mechanism, center-hole mounting
❽ Door-coupling knob-operated mechanism, center-hole mounting

[1)] The N switching contact ❶ first has to be mounted on the basic unit

Mounting types

You will find further information in the configuration manual: sie.ag/2UlrAvy

Front mounting



The switches for front mounting are mounted on the inside of covers, side panels or, if applicable, control cabinet doors (depending on the applicable standard and switching function). The switches are mounted via the 22.5 mm diameter center hole.

Panel mounting



The switches for panel mounting are snapped onto 35 mm standard mounting rails according to EN 60715 or screw-mounted on mounting panels. The actuators are connected to the lower section of the switch through a door coupling, which can be released in its zero position, and a 300 mm long switch shaft. When the control cabinet door is open, the switch can be protected against inadvertent operation by removing the switch shaft from the lower section of the switch. The overall depth can be adapted to individual requirements by adjusting the switch shaft length.

Distribution board mounting



The switches for distribution board mounting are suited for operation in distribution boards and for switching inside control cabinets or distributors. They have cap and mounting dimensions acc. to DIN 43880 and can be fitted under the same cover together with miniature circuit breakers. The selector switches can be locked in their OFF position with no more than one padlock with a hasp thickness of 4 to 6 mm.

Basic switches without knob-operated mechanism



For the basic switch variant without knob-operated mechanism, the appropriate door-coupling rotary operating mechanism can be ordered separately.

3LD3 main control and EMERGENCY-STOP switches, front mounting



Number of poles	Operating mechanisms, black	
	3P	
	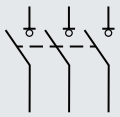	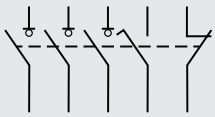
Uninterrupted current I_u At AC-21A, 380 ... 440 V	Operational power P At AC-23A, 380 ... 440 V	Operational power P At AC-3, 380 ... 440 V	Without auxiliary switch	1 NO + 1 NC
Rotary operating mechanisms				
16 A	7.5 kW	5.5 kW	3LD3054-0TK51	3LD3054-1TK51
25 A	9 kW	7.5 kW	3LD3154-0TK51	3LD3154-1TK51
32 A	11.5 kW	9.5 kW	3LD3254-0TK51	3LD3254-1TK51
40 A	18.5 kW	11.5 kW	3LD3354-0TK51	3LD3354-1TK51
63 A	22 kW	18.5 kW	3LD3454-0TK51	3LD3454-1TK51
Knob-operated mechanisms				
16 A	7.5 kW	5.5 kW	3LD3050-0TK11	3LD3050-1TK11
25 A	9 kW	7.5 kW	3LD3150-0TK11	3LD3150-1TK11
32 A	11.5 kW	9.5 kW	3LD3250-0TK11	3LD3250-1TK11
40 A	18.5 kW	11.5 kW	3LD3350-0TK11	3LD3350-1TK11
63 A	22 kW	18.5 kW	3LD3450-0TK11	3LD3450-1TK11

Scope of supply:
- Including terminal covers for the infeed side

Accessories

				3LD30 (16 A)	3LD31 (25 A)	3LD32 (32 A)	3LD33 (40 A)	3LD34 (63 A)
Additional poles								
	Variant	Contacts	Catalog No.					
	Switching contact for N conductor (4th contact)	Leading switch-on, lagging switch-off	3LD9340-0B	■	■	■	■	■
	N terminal	Through-type	3LD9340-2B	■	■	■	■	■
	PE terminal	Through-type	3LD9340-3B	■	■	■	■	■
Auxiliary switches								
		Contacts	Catalog No.					
		1 NO + 1 NC	3LD9340-6B	■	■	■	■	■
Rotary operating mechanisms								
		Color	Catalog No.					
		Black	3LD9344-4C	■	■	■	■	■
		Red/yellow	3LD9344-5C	■	■	■	■	■
Knob-operated mechanisms								
		Color	Catalog No.					
		Black	3LD9343-6C	■	■	■	■	■
		Red/yellow	3LD9343-7C	■	■	■	■	■

3LD switch disconnectors

3LD3 main control and EMERGENCY-STOP switches, front mounting, 6 kA_{rms}


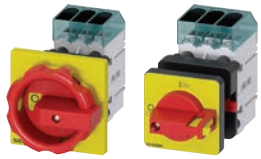
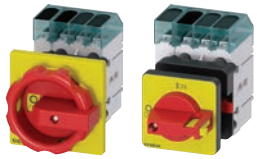

Operating mechanisms, red/yellow

3P+N		3P		3P+N	
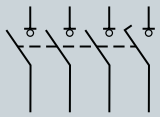	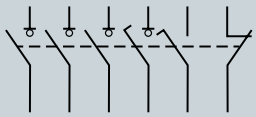	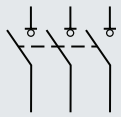	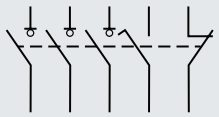	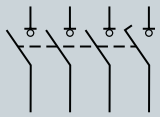	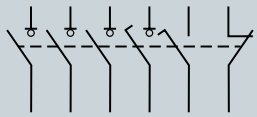
Without auxiliary switch	1 NO + 1 NC	Without auxiliary switch	1 NO + 1 NC	Without auxiliary switch	1 NO + 1 NC
3LD3054-0TL51	3LD3054-1TL51	3LD3054-0TK53	3LD3054-1TK53	3LD3054-0TL53	3LD3054-1TL53
3LD3154-0TL51	3LD3154-1TL51	3LD3154-0TK53	3LD3154-1TK53	3LD3154-0TL53	3LD3154-1TL53
3LD3254-0TL51	3LD3254-1TL51	3LD3254-0TK53	3LD3254-1TK53	3LD3254-0TL53	3LD3254-1TL53
3LD3354-0TL51	3LD3354-1TL51	3LD3354-0TK53	3LD3354-1TK53	3LD3354-0TL53	3LD3354-1TL53
3LD3454-0TL51	3LD3454-1TL51	3LD3454-0TK53	3LD3454-1TK53	3LD3454-0TL53	3LD3454-1TL53
3LD3050-0TL11	3LD3050-1TL11	3LD3050-0TK13	3LD3050-1TK13	3LD3050-0TL13	3LD3050-1TL13
3LD3150-0TL11	3LD3150-1TL11	3LD3150-0TK13	3LD3150-1TK13	3LD3150-0TL13	3LD3150-1TL13
3LD3250-0TL11	3LD3250-1TL11	3LD3250-0TK13	3LD3250-1TK13	3LD3250-0TL13	3LD3250-1TL13
3LD3350-0TL11	3LD3350-1TL11	3LD3350-0TK13	3LD3350-1TK13	3LD3350-0TL13	3LD3350-1TL13
3LD3450-0TL11	3LD3450-1TL11	3LD3450-0TK13	3LD3450-1TK13	3LD3450-0TL13	3LD3450-1TL13

			3LD30 (16 A)	3LD31 (25 A)	3LD32 (32 A)	3LD33 (40 A)	3LD34 (63 A)
Terminal covers							
	• Pack of 4 units						
	Version	**Catalog No.**					
	For N switching contacts, N terminals or PE terminals	3LD9341-2A	■	■	■	■	■
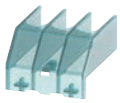	For 3-pole 3LD3 switch disconnectors	3LD9341-0A	■	■	■	■	■
Inscription labels							
	• Pack of 10 units						
	Inscription	**Catalog No.**					
	German / English (Hauptschalter / Main Switch)	3LD9346-1A	■	■	■	■	■
	French / Spanish (Interrupteur Principal / Interruptor Principal)	3LD9346-2A	■	■	■	■	■
	Without inscription	3LD9346-3A	■	■	■	■	■

3LD switch disconnectors

3LD3 main control and EMERGENCY-STOP switches, panel mounting, 6 kA_{rms}

3LD3 main control and EMERGENCY-STOP switches, panel mounting



	Operating mechanisms, black	
Number of poles	3P	
	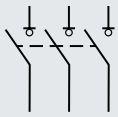	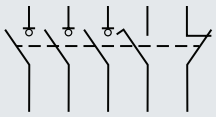
Uninterrupted current I_u At AC-21A, 380 ... 440 V	Operational power P At AC-23A, 380 ... 440 V	Operational power P At AC-3, 380 ... 440 V	Without auxiliary switch	1 NO + 1 NC
Rotary operating mechanisms				
16 A	7.5 kW	5.5 kW	3LD3048-0TK51	3LD3048-1TK51
25 A	9 kW	7.5 kW	3LD3148-0TK51	3LD3148-1TK51
32 A	11.5 kW	9.5 kW	3LD3248-0TK51	3LD3248-1TK51
40 A	18.5 kW	11.5 kW	3LD3348-0TK51	3LD3348-1TK51
63 A	22 kW	18.5 kW	3LD3448-0TK51	3LD3448-1TK51
Knob-operated mechanisms				
16 A	7.5 kW	5.5 kW	3LD3040-0TK11	3LD3040-1TK11
25 A	9 kW	7.5 kW	3LD3140-0TK11	3LD3140-1TK11
32 A	11.5 kW	9.5 kW	3LD3240-0TK11	3LD3240-1TK11
40 A	18.5 kW	11.5 kW	3LD3340-0TK11	3LD3340-1TK11
63 A	22 kW	18.5 kW	3LD3440-0TK11	3LD3440-1TK11

Scope of supply:
- Including terminal covers for the infeed side

Mounting:
- Using screws or snap-on mounting on 35 mm mounting rails

Accessories

				3LD30 (16 A)	3LD31 (25 A)	3LD32 (32 A)	3LD33 (40 A)	3LD34 (63 A)
Additional poles								
	Variant	Contacts	Catalog No.					
	Switching contact for N conductor (4th contact)	Leading switch-on, lagging switch-off	3LD9340-0C	■	■	■	■	■
	N terminal	Through-type	3LD9340-2C	■	■	■	■	■
	PE terminal	Through-type	3LD9340-3C	■	■	■	■	■
Auxiliary switches								
		Contacts	Catalog No.					
		1 NO + 1 NC	3LD9340-6C	■	■	■	■	■
Rotary operating mechanisms								
	Version	Color	Catalog No.					
	Incl. funnel	Black	3LD9344-2C	■	■	■	■	■
		Red/yellow	3LD9344-3C	■	■	■	■	■
Knob-operated mechanisms								
	Version	Color	Catalog No.					
	Incl. funnel	Black	3LD9343-4C	■	■	■	■	■
		Red/yellow	3LD9343-5C	■	■	■	■	■

3LD switch disconnectors

3LD3 main control and EMERGENCY-STOP switches, panel mounting, 6 kA_{rms}

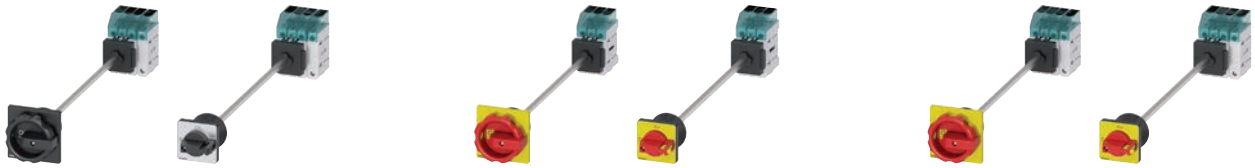

Operating mechanisms, red/yellow

3P+N		3P		3P+N	
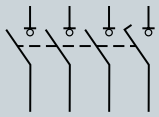	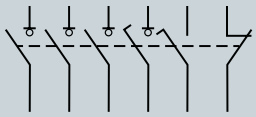	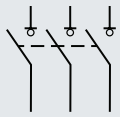	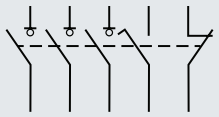	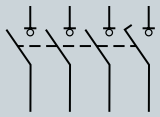	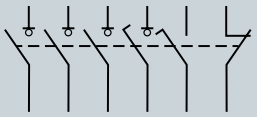
Without auxiliary switch	1 NO + 1 NC	Without auxiliary switch	1 NO + 1 NC	Without auxiliary switch	1 NO + 1 NC
3LD3048-0TL51	3LD3048-1TL51	3LD3048-0TK53	3LD3048-1TK53	3LD3048-0TL53	3LD3048-1TL53
3LD3148-0TL51	3LD3148-1TL51	3LD3148-0TK53	3LD3148-1TK53	3LD3148-0TL53	3LD3148-1TL53
3LD3248-0TL51	3LD3248-1TL51	3LD3248-0TK53	3LD3248-1TK53	3LD3248-0TL53	3LD3248-1TL53
3LD3348-0TL51	3LD3348-1TL51	3LD3348-0TK53	3LD3348-1TK53	3LD3348-0TL53	3LD3348-1TL53
3LD3448-0TL51	3LD3448-1TL51	3LD3448-0TK53	3LD3448-1TK53	3LD3448-0TL53	3LD3448-1TL53
3LD3040-0TL11	3LD3040-1TL11	3LD3040-0TK13	3LD3040-1TK13	3LD3040-0TL13	3LD3040-1TL13
3LD3140-0TL11	3LD3140-1TL11	3LD3140-0TK13	3LD3140-1TK13	3LD3140-0TL13	3LD3140-1TL13
3LD3240-0TL11	3LD3240-1TL11	3LD3240-0TK13	3LD3240-1TK13	3LD3240-0TL13	3LD3240-1TL13
3LD3340-0TL11	3LD3340-1TL11	3LD3340-0TK13	3LD3340-1TK13	3LD3340-0TL13	3LD3340-1TL13
3LD3440-0TL11	3LD3440-1TL11	3LD3440-0TK13	3LD3440-1TK13	3LD3440-0TL13	3LD3440-1TL13

				3LD30 (16 A)	3LD31 (25 A)	3LD32 (32 A)	3LD33 (40 A)	3LD34 (63 A)
Switching shafts								
	Cross-section	Length	Catalog No.					
	6 × 6 mm	600 mm	3LD93451C	■	■	■	■	■
Door-coupling rotary operating mechanisms								
	Variant	Color	Catalog No.					
	Rotary operating mechanisms 66 × 66 mm	Black	3LD9344-2CA	■	■	■	■	■
		Red/yellow	3LD9344-3CA	■	■	■	■	■
	Knob-operated mechanisms 48 × 48 mm	Black	3LD9343-4CA	■	■	■	■	■
		Red/yellow	3LD9343-5CA	■	■	■	■	■
Terminal covers								
	• Pack of 4 units							
	Version		Catalog No.					
	For N switching contacts, N terminals or PE terminals		3LD9341-2A	■	■	■	■	■
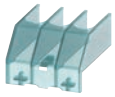	For 3LD3 3-pole switch disconnectors		3LD9341-0A	■	■	■	■	■
Inscription labels								
	• Pack of 10 units							
	Inscription		Catalog No.					
	German / English (Hauptschalter / Main Switch)		3LD9346-1A	■	■	■	■	■
	French / Spanish (Interrupteur Principal / Interruptor Principal)		3LD9346-2A	■	■	■	■	■
	Without inscription		3LD9346-3A	■	■	■	■	■

3LD3 main control and EMERGENCY-STOP switches, distribution boards and without direct operating mechanism, 6 kA_{rms}

3LD3 main control and EMERGENCY-STOP switches, installation in distribution boards and basic switches without direct operating mechanism



Operating mechanisms, black

Number of poles 3P

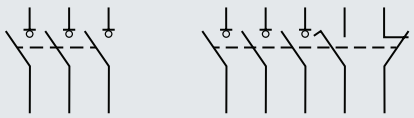

Uninterrupted current I_u At AC-21A, 380 ... 440 V	Operational power P At AC-23A, 380 ... 440 V	Operational power P At AC-3, 380 ... 440 V	Without auxiliary switch	1 NO + 1 NC
Basic switch with masking plate and selector knob, standard rail mounting				
16 A	7.5 kW	5.5 kW	3LD3030-0TK11	3LD3030-1TK11
25 A	9 kW	7.5 kW	3LD3130-0TK11	3LD3130-1TK11
32 A	11.5 kW	9.5 kW	3LD3230-0TK11	3LD3230-1TK11
40 A	18.5 kW	11.5 kW	3LD3330-0TK11	3LD3330-1TK11
63 A	22 kW	18.5 kW	3LD3430-0TK11	3LD3430-1TK11
Basic switches without knob-operated mechanism				
16 A	7.5 kW	5.5 kW	3LD3010-0TK05	3LD3010-1TK05
25 A	9 kW	7.5 kW	3LD3110-0TK05	3LD3110-1TK05
32 A	11.5 kW	9.5 kW	3LD3210-0TK05	3LD3210-1TK05
40 A	18.5 kW	11.5 kW	3LD3310-0TK05	3LD3310-1TK05
63 A	22 kW	18.5 kW	3LD3410-0TK05	3LD3410-1TK05

Scope of supply:
- Basic switches without direct operating mechanism, incl. terminal covers for the infeed side

Mounting:
- Using screws or snap-on mounting on 35 mm mounting rails

Accessories for switches for installation in distribution boards and basic switches without knob-operated mechanism

	Variant	Contacts	Catalog No.	3LD30 (16 A)	3LD31 (25 A)	3LD32 (32 A)	3LD33 (40 A)	3LD34 (63 A)
Additional poles								
	Switching contact for N conductor (4th contact)	Leading switch-on, lagging switch-off	3LD9340-0C	■	■	■	■	■
	N terminal	Through-type	3LD9340-2C	■	■	■	■	■
	PE terminal	Through-type	3LD9340-3C	■	■	■	■	■
Auxiliary switches								
		Contacts	Catalog No.					
		1 NO + 1 NC	3LD9340-6C	■	■	■	■	■
Terminal covers								
	• Pack of 4 units							
	Version		Catalog No.					
	For N switching contacts, N terminals or PE terminals		3LD9341-2A	■	■	■	■	■
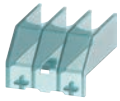	For 3LD3 3-pole switch disconnectors		3LD9341-0A	■	■	■	■	■
Switching shafts								
	Cross-section	Length	Catalog No.					
	6 × 6 mm	600 mm	3LD93451C	■	■	■	■	■

3LD switch disconnectors

3LD3 main control and EMERGENCY-STOP switches, distribution boards and without direct operating mechanism, 6 kA_{rms}





Operating mechanisms, red/yellow					
3P+N		3P		3P+N	
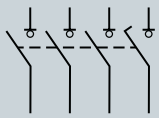	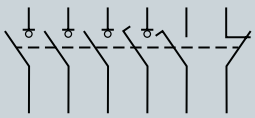	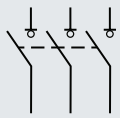	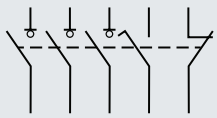	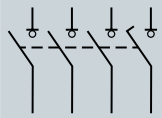	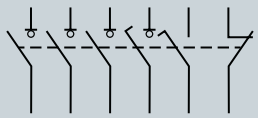
Without auxiliary switch	1 NO + 1 NC	Without auxiliary switch	1 NO + 1 NC	Without auxiliary switch	1 NO + 1 NC
3LD3030-0TL11	3LD3030-1TL11	3LD3030-0TK13	3LD3030-1TK13	3LD3030-0TL13	3LD3030-1TL13
3LD3130-0TL11	3LD3130-1TL11	3LD3130-0TK13	3LD3130-1TK13	3LD3130-0TL13	3LD3130-1TL13
3LD3230-0TL11	3LD3230-1TL11	3LD3230-0TK13	3LD3230-1TK13	3LD3230-0TL13	3LD3230-1TL13
3LD3330-0TL11	3LD3330-1TL11	3LD3330-0TK13	3LD3330-1TK13	3LD3330-0TL13	3LD3330-1TL13
3LD3430-0TL11	3LD3430-1TL11	3LD3430-0TK13	3LD3430-1TK13	3LD3430-0TL13	3LD3430-1TL13
3LD3010-0TL05	3LD3010-1TL05	–	–	–	–
3LD3110-0TL05	3LD3110-1TL05	–	–	–	–
3LD3210-0TL05	3LD3210-1TL05	–	–	–	–
3LD3310-0TL05	3LD3310-1TL05	–	–	–	–
3LD3410-0TL05	3LD3410-1TL05	–	–	–	–

Accessories for basic switches without operating mechanism

				3LD30 (16 A)	3LD31 (25 A)	3LD32 (32 A)	3LD33 (40 A)	3LD34 (63 A)
Rotary operating mechanisms								
	Version	Color	Catalog No.					
	Incl. funnel	Black	3LD9344-2C	■	■	■	■	■
		Red/yellow	3LD9344-3C	■	■	■	■	■
Knob-operated mechanisms								
	Version	Color	Catalog No.					
	Incl. funnel	Black	3LD9343-4C	■	■	■	■	■
		Red/yellow	3LD9343-5C	■	■	■	■	■
Door-coupling rotary operating mechanisms								
	Variant	Color	Catalog No.					
	Rotary operating mechanisms 66 × 66 mm	Black	3LD9344-2CA	■	■	■	■	■
		Red/yellow	3LD9344-3CA	■	■	■	■	■
	Knob-operated mechanisms 48 × 48 mm	Black	3LD9343-4CA	■	■	■	■	■
		Red/yellow	3LD9343-5CA	■	■	■	■	■
Switching shafts								
	Cross-section	Length	Catalog No.					
	6 × 6 mm	600 mm	3LD93451C	■	■	■	■	■
Inscription labels								
	• Pack of 10 units							
	Inscription		Catalog No.					
	German / English (Hauptschalter / Main Switch)		3LD9346-1A	■	■	■	■	■
	French / Spanish (Interrupteur Principal / Interruptor Principal)		3LD9346-2A	■	■	■	■	■
	Without inscription		3LD9346-3A	■	■	■	■	■

3LD3 main control and EMERGENCY-STOP switches, accessories

	Version	Contacts	Catalog No.	3LD30 (16 A)	3LD31 (25 A)	3LD32 (32 A)	3LD33 (40 A)	3LD34 (63 A)
Switching contacts for N conductor (4th contact)								
	For front mounting	Leading switch-on, lagging switch-off	3LD9340-0B	■	■	■	■	■
	For panel mounting, installation in distribution boards and basic switches without knob-operated mechanism	Leading switch-on, lagging switch-off	3LD9340-0C	■	■	■	■	■
N terminals								
	For front mounting	Through-type	3LD9340-2B	■	■	■	■	■
	For panel mounting, installation in distribution boards and basic switches without knob-operated mechanism	Through-type	3LD9340-2C	■	■	■	■	■
PE terminals								
	For front mounting	Through-type	3LD9340-3B	■	■	■	■	■
	For panel mounting, installation in distribution boards and basic switches without knob-operated mechanism	Through-type	3LD9340-3C	■	■	■	■	■
Auxiliary switches								
	For front mounting	1 NO + 1 NC	3LD9340-6B	■	■	■	■	■
	For panel mounting, installation in distribution boards and basic switches without knob-operated mechanism	1 NO + 1 NC	3LD9340-6C	■	■	■	■	■

3LD3 main control and EMERGENCY-STOP switches, accessories

Rotary operating mechanisms





Version	Color	Catalog No.	3LD30 (16 A)	3LD31 (25 A)	3LD32 (32 A)	3LD33 (40 A)	3LD34 (63 A)
For front mounting, without funnel	Black	3LD9344-4C	■	■	■	■	■
	Red/ yellow	3LD9344-5C	■	■	■	■	■
For panel mounting and basic switches without knob-operated mechanism, with funnel	Black	3LD9344-2C	■	■	■	■	■
	Red/ yellow	3LD9344-3C	■	■	■	■	■

Knob-operated mechanisms





Version	Color	Catalog No.	3LD30 (16 A)	3LD31 (25 A)	3LD32 (32 A)	3LD33 (40 A)	3LD34 (63 A)
For front mounting, without funnel	Black	3LD9343-6C	■	■	■	■	■
	Red/ yellow	3LD9343-7C	■	■	■	■	■
For panel mounting and basic switches without knob-operated mechanism, with funnel	Black	3LD9343-4C	■	■	■	■	■
	Red/ yellow	3LD9343-5C	■	■	■	■	■

Door-coupling rotary operating mechanisms





Version	Variant	Color	Catalog No.	3LD30 (16 A)	3LD31 (25 A)	3LD32 (32 A)	3LD33 (40 A)	3LD34 (63 A)
For panel mounting and basic switches without knob-operated mechanism	Rotary operating mechanisms 66 × 66 mm	Black	3LD9344-2CA	■	■	■	■	■
		Red/ yellow	3LD9344-3CA	■	■	■	■	■
	Knob-operated mechanisms 48 × 48 mm	Black	3LD9343-4CA	■	■	■	■	■
		Red/ yellow	3LD9343-5CA	■	■	■	■	■

Terminal covers

- For front mounting, panel mounting, installation in distribution boards and basic switches without knob-operated mechanism
- Pack of 4 units



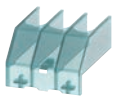

Number of poles	Catalog No.	3LD30 (16 A)	3LD31 (25 A)	3LD32 (32 A)	3LD33 (40 A)	3LD34 (63 A)
1-pole	3LD9341-2A	■	■	■	■	■
3-pole	3LD9341-0A	■	■	■	■	■

Switching shafts



Cross-section	Length	Catalog No.	3LD30 (16 A)	3LD31 (25 A)	3LD32 (32 A)	3LD33 (40 A)	3LD34 (63 A)
6 × 6 mm	600 mm	3LD93451C	■	■	■	■	■

Inscription labels



- Pack of 10 units
- Not for installation in distribution boards

Inscription	Catalog No.	3LD30 (16 A)	3LD31 (25 A)	3LD32 (32 A)	3LD33 (40 A)	3LD34 (63 A)
German / English (Hauptschalter / Main Switch)	3LD9346-1A	■	■	■	■	■
French / Spanish (Interrupteur Principal / Interruptor Principal)	3LD9346-2A	■	■	■	■	■
Without inscription	3LD9346-3A	■	■	■	■	■

3LD switch disconnectors

System overview of 3LD2 switch disconnectors

Basic units for front mounting


3P rotary operating mechanisms


3P knob-operated mechanisms (3LD23/3LD24)


3P knob-operated mechanisms


3P+N rotary operating mechanisms


3P+N knob-operated mechanisms (3LD23/3LD24)


3P+N knob-operated mechanisms


6P rotary operating mechanisms

Basic units for panel mounting


3P rotary operating mechanisms


3P knob-operated mechanisms (3LD23/3LD24)


3P knob-operated mechanisms, defeatable


3P+N rotary operating mechanisms


3P+N knob-operated mechanisms (3LD23/3LD24)


3P+N knob-operated mechanisms, defeatable


6P rotary operating mechanisms

Basic units for installation in distribution boards/enclosures, DC


3P knob-operated mechanisms


3P+N knob-operated mechanisms


8P DC isolators

Additional poles and auxiliary switches


N switching contacts


N/PE terminals (through-type)


Auxiliary switches (standard version)


Auxiliary switch for mounting on the front new

Operating mechanisms


Rotary operating mechanisms for 4-hole and center-hole mounting




Knob-operated mechanisms (3LD23/3LD24)


Switching shafts


Coupling pieces without ON-lock


Assembly tools for center-hole mounting

Other accessories


Terminal covers, 1-pole


Terminal covers, 3 and 4-pole



Inscription labels (with and without inscription)

Note:
You will find a detailed range of accessories with the basic units.

Mounting concept and accessories

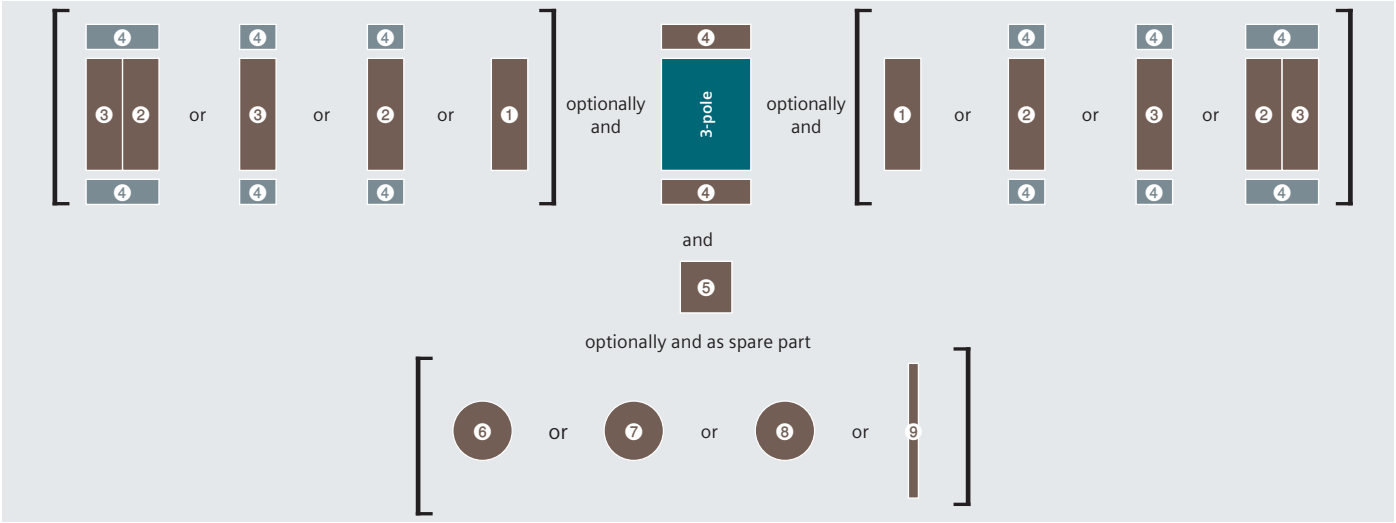

Legend

❶ Auxiliary switch
❷ N switching contact [1)]
❸ N/PE terminal
❹ Terminal cover
❺ Auxiliary switch for mounting on the front [2)]
❻ Rotary operating mechanism, center-hole mounting
❼ Rotary operating mechanism, four-hole mounting
❽ Knob-operated mechanism, four-hole mounting
❾ Switching shaft (300 or 600)

[1)] The N switching contact ❷ first has to be mounted on the basic unit
[2)] Can only be used with four-hole front mounting and panel mounting

Mounting types

You will find further information in the configuration manual: sie.ag/2UlrAvy

Front mounting



The switches for front mounting are mounted on the inside of covers, side panels or, if applicable, control cabinet doors (depending on the applicable standard and switching function). In addition to the 4-hole fastening of the handle, up to 63 A (3LD25) fastening with the 22.5 mm diameter center hole can also be chosen.

Panel mounting



The switches for panel mounting up to 125 A (3LD28) are snapped onto 35 mm standard mounting rails according to EN 60715 or screw-mounted on mounting panels. The switches for 160 and 250 A (3LD23/3LD24) are exclusively screwed onto mounting panels.
The actuators are connected to the lower section of the switch through a door coupling, which can be released in its zero position, and a 300 mm long switch shaft. When the control cabinet door is open, the switch can be protected against inadvertent operation by removing the switch shaft from the lower section of the switch. The overall depth can be adapted to individual requirements by adjusting the switch shaft length.

Distribution board mounting



The switches for distribution board mounting are suited for operation in distribution boards and for switching inside control cabinets or distributors. Up to 125 A (3LD28), they have cap and mounting dimensions acc. to DIN 43880 and can be fitted under the same cover together with miniature circuit breakers.

DC isolators



The DC isolators in the enclosure are suitable for disconnecting loads of up to 800 V DC due to their 8-pole design. To provide additional safety, the isolators can be locked in the 0 position.

3LD2 main control switches, front mounting



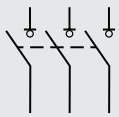

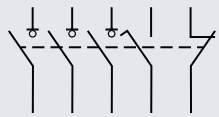

	Operating mechanisms, black	
Number of poles	3P	
Uninterrupted current I_u At AC-21A, 380 ... 440 V	Operational power P At AC-23A, 380 ... 440 V	Operational power P At AC-3A, 380 ... 440 V	Without auxiliary switch	1 NO + 1 NC (standard version)
Rotary operating mechanism, four-hole mounting				
16 A	7.5 kW	5.5 kW	3LD2003-0TK51	3LD2003-1TP51
25 A	9.5 kW	7.5 kW	3LD2103-0TK51	3LD2103-1TP51
32 A	11.5 kW	9.5 kW	3LD2203-0TK51	3LD2203-1TP51
63 A	22 kW	18.5 kW	3LD2504-0TK51	3LD2504-1TP51
100 A	37 kW	30 kW	3LD2704-0TK51	3LD2704-1TP51
125 A	45 kW	37 kW	3LD2804-0TK51	3LD2804-1TP51
160 A	75 kW	50 kW	3LD2305-0TK11	3LD2305-0TK11 + 3LD9200-5B
250 A	132 kW	110 kW	3LD2405-0TK11	3LD2405-0TK11 + 3LD9200-5B
Rotary operating mechanism, center-hole mounting Ø 22.5 mm				
16 A	7.5 kW	5.5 kW	3LD2054-0TK51	3LD2054-1TP51
25 A	9.5 kW	7.5 kW	3LD2154-0TK51	3LD2154-1TP51
32 A	11.5 kW	9.5 kW	3LD2254-0TK51	3LD2254-0TK51 + 3LD9200-5B
63 A	22 kW	18.5 kW	3LD2555-0TK51	3LD2555-0TK51 + 3LD9200-5B
Knob-operated mechanism, four-hole mounting				
16 A	7.5 kW	5.5 kW	3LD2022-0TK11	3LD2022-0TK11 + 3LD9200-5B
25 A	9.5 kW	7.5 kW	3LD2122-0TK11	3LD2122-0TK11 + 3LD9200-5B
32 A	11.5 kW	9.5 kW	3LD2222-0TK11	3LD2222-0TK11 + 3LD9200-5B
Knob-operated mechanism, center-hole mounting Ø 22.5 mm				
16 A	7.5 kW	5.5 kW	3LD2050-0TK11	3LD2050-0TK11 + 3LD9200-5B
25 A	9.5 kW	7.5 kW	3LD2150-0TK11	3LD2150-0TK11 + 3LD9200-5B
32 A	11.5 kW	9.5 kW	3LD2250-0TK11	3LD2250-0TK11 + 3LD9200-5B

Scope of supply:
- Including terminal covers for the infeed side

Accessories, see pages 18/72 to 18/73

3LD switch disconnectors

3LD2 main control switches, front mounting, 25 ... 50 kA_{eff}





3P+N		6P	
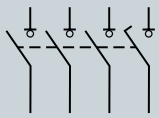	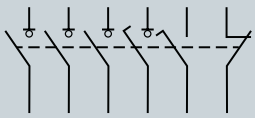	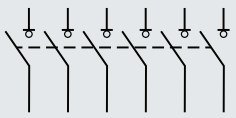	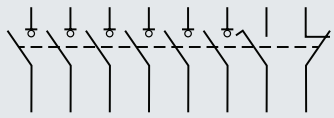
Without auxiliary switch	1 NO + 1 NC (standard version)	Without auxiliary switch	1 NO + 1 NC (standard version)
3LD2003-1TL51	3LD2003-2EP51	–	–
3LD2103-1TL51	3LD2103-2EP51	3LD2103-3VK51	3LD2103-4VP51
3LD2203-1TL51	3LD2203-1TL51 + 3LD9200-5B	3LD2203-3VK51	3LD2203-3VK51 + 3LD9200-5B
3LD2504-1TL51	3LD2504-1TP51 + 3LD9250-0BA	3LD2504-3VK51	3LD2504-3VK51 + 3LD9200-5B
3LD2704-0TK51 + 3LD9280-0B	3LD2704-0TK51 + 3LD9280-0B + 3LD9200-5B	–	–
3LD2804-0TK51 + 3LD9280-0B	3LD2804-0TK51 + 3LD9280-0B + 3LD9200-5B	–	–
3LD2305-1TL11	3LD2305-1TL11 + 3LD9200-5B	3LD2305-3VK11	3LD2305-3VK11 + 3LD9200-5B
3LD2405-1TL11	3LD2405-1TL11 + 3LD9200-5B	3LD2405-3VK11	3LD2405-3VK11 + 3LD9200-5B
3LD2054-1TL51	3LD2054-2EP51	–	–
3LD2154-1TL51	3LD2154-2EP51	–	–
3LD2254-1TL51	3LD2254-1TL51 + 3LD9200-5B	–	–
3LD2555-0TK51 + 3LD9250-0BA	3LD2555-0TK51 + 3LD9250-0BA + 3LD9200-5B	–	–
3LD2022-1TL11	3LD2022-1TL11 + 3LD9200-5B	–	–
3LD2122-1TL11	3LD2122-1TL11 + 3LD9200-5B	–	–
3LD2222-0TK11 + 3LD9220-0B	3LD2222-0TK11 + 3LD9220-0B + 3LD9200-5B	–	–
3LD2050-1TL11	3LD2050-1TL11 + 3LD9200-5B	–	–
3LD2150-0TK11 + 3LD9220-0B	3LD2150-0TK11 + 3LD9220-0B + 3LD9200-5B	–	–
3LD2250-0TK11 + 3LD9220-0B	3LD2250-0TK11 + 3LD9220-0B + 3LD9200-5B	–	–

3LD2 EMERGENCY-STOP switches, front mounting



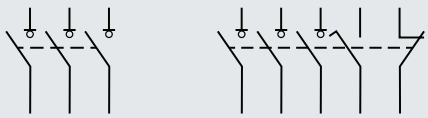

Number of poles	Operating mechanisms, red/yellow 3P	
Uninterrupted current I_u At AC-21A, 380 ... 440 V	Operational power P At AC-23A, 380 ... 440 V	Operational power P At AC-3A, 380 ... 440 V	Without auxiliary switch	1 NO + 1 NC (standard version)
Rotary operating mechanism, four-hole mounting				
16 A	7.5 kW	5.5 kW	3LD2003-0TK53	3LD2003-1TP53
25 A	9.5 kW	7.5 kW	3LD2103-0TK53	3LD2103-1TP53
32 A	11.5 kW	9.5 kW	3LD2203-0TK53	3LD2203-1TP53
63 A	22 kW	18.5 kW	3LD2504-0TK53	3LD2504-1TP53
100 A	37 kW	30 kW	3LD2704-0TK53	3LD2704-1TP53
125 A	45 kW	37 kW	3LD2804-0TK53	3LD2804-1TP53
160 A	75 kW	50 kW	3LD2305-0TK13	3LD2305-0TK13 + 3LD9200-5B
250 A	132 kW	110 kW	3LD2405-0TK13	3LD2405-0TK13 + 3LD9200-5B
Rotary operating mechanism, center-hole mounting Ø 22.5 mm				
16 A	7.5 kW	5.5 kW	3LD2054-0TK53	3LD2054-1TP53
25 A	9.5 kW	7.5 kW	3LD2154-0TK53	3LD2154-1TP53
32 A	11.5 kW	9.5 kW	3LD2254-0TK53	3LD2254-0TK53 + 3LD9200-5B
63 A	22 kW	18.5 kW	3LD2555-0TK53	3LD2555-0TK53 + 3LD9200-5B
Knob-operated mechanism, four-hole mounting				
16 A	7.5 kW	5.5 kW	3LD2022-0TK13	3LD2022-0TK13 + 3LD9200-5B
25 A	9.5 kW	7.5 kW	3LD2122-0TK13	3LD2122-0TK13 + 3LD9200-5B
32 A	11.5 kW	9.5 kW	3LD2222-0TK13	3LD2222-0TK13 + 3LD9200-5B
Knob-operated mechanism, center-hole mounting Ø 22.5 mm				
16 A	7.5 kW	5.5 kW	3LD2050-0TK13	3LD2050-0TK13 + 3LD9200-5B
25 A	9.5 kW	7.5 kW	3LD2150-0TK13	3LD2150-0TK13 + 3LD9200-5B
32 A	11.5 kW	9.5 kW	3LD2250-0TK13	3LD2250-0TK13 + 3LD9200-5B

Scope of supply:
- Including terminal covers for the infeed side

Accessories, see pages 18/72 to 18/73

3LD switch disconnectors

3LD2 EMERGENCY-STOP switches, front mounting, 25 ... 50 kA_{eff}



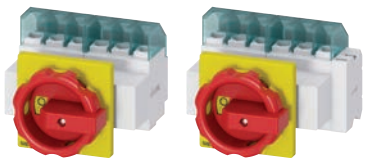

3+N		6P	
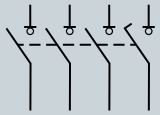	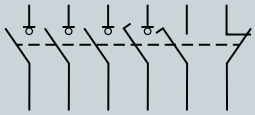	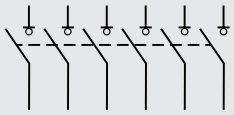	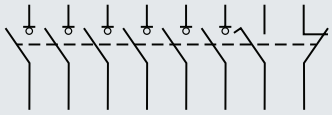
Without auxiliary switch	**1 NO + 1 NC (standard version)**	**Without auxiliary switch**	**1 NO + 1 NC (standard version)**
3LD2003-1TL53	3LD2003-2EP53	–	–
3LD2103-1TL53	3LD2103-2EP53	3LD2103-3VK53	3LD2103-4VP53
3LD2203-1TL53	3LD2203-1TL53 + 3LD9200-5B	3LD2203-3VK53	3LD2203-3VK53 + 3LD9200-5B
3LD2504-1TL53	3LD2504-1TP53 + 3LD9250-0BA	3LD2504-3VK53	3LD2504-3VK53 + 3LD9200-5B
3LD2704-0TK53 + 3LD9280-0B	3LD2704-0TK53 + 3LD9280-0B + 3LD9200-5B	–	–
3LD2804-0TK53 + 3LD9280-0B	3LD2804-0TK53 + 3LD9280-0B + 3LD9200-5B	–	–
3LD2305-1TL13	3LD2305-1TL13 + 3LD9200-5B	3LD2305-3VK13	3LD2305-3VK13 + 3LD9200-5B
3LD2405-1TL13	3LD2405-1TL13 + 3LD9200-5B	3LD2405-3VK13	3LD2405-3VK13 + 3LD9200-5B
3LD2054-1TL53	3LD2054-2EP53	–	–
3LD2154-1TL53	3LD2154-2EP53	–	–
3LD2254-1TL53	3LD2254-1TL53 + 3LD9200-5B	–	–
3LD2555-0TK53 + 3LD9250-0BA	3LD2555-0TK53 + 3LD9250-0BA + 3LD9200-5B	–	–
3LD2022-1TL13	3LD2022-1TL13 + 3LD9200-5B	–	–
3LD2122-1TL13	3LD2122-1TL13 + 3LD9200-5B	–	–
3LD2222-0TK13 + 3LD9220-0B	3LD2222-0TK13 + 3LD9220-0B + 3LD9200-5B	–	–
3LD2050-1TL13	3LD2050-1TL13 + 3LD9200-5B	–	–
3LD2150-0TK13 + 3LD9220-0B	3LD2150-0TK13 + 3LD9220-0B + 3LD9200-5B	–	–
3LD2250-0TK13 + 3LD9220-0B	3LD2250-0TK13 + 3LD9220-0B + 3LD9200-5B	–	–

Accessories for front mounting

			3LD20 (16 A)	3LD21 (25 A)	3LD22 (32 A)	3LD25 (63 A)	3LD27 (100 A)	3LD28 (125 A)	3LD23 (160 A)	3LD24 (250 A)
Switching contacts for N conductor (4th contact)										
	Contacts	Catalog No.								
	Leading switch-on, lagging switch-off	3LD9220-0B		■	■					
		3LD9250-0BA				■				
		3LD9280-0B					■	■		
		3LD9240-0B							■	■
N/PE terminals										
	Contacts	Catalog No.								
	Through-type	3LD9200-2B	■							
		3LD9220-2B		■	■					
		3LD9250-2BA				■				
		3LD9280-2B					■	■		
		3LD9240-2B							■	■
Auxiliary switches (standard version)										
	• For mounting on the left and/or right • Lagging switch-on, leading switch-off									
	Contacts	Contact surface	Catalog No.							
	1 NO + 1 NC	Standard	3LD9200-5B	■	■	■	■	■	■	■	■
		Gold-plated	3LD9200-5BF	■	■	■	■	■	■	■	■
Auxiliary switch for mounting on the front										
	• Mounted on the switch shaft • For four-hole front mounting and panel mounting only • For long leading times (20 ... 150 m) • Not for 6-pole 3LD23 (160 A) and 3LD24 (250 A)									
	Contacts	Contact surface	Catalog No.							
	1 NO + 1 NC	Standard	3LD9280-5D	■	■	■	■	■	■		
			3LD9240-5D new							■	■
		Gold-plated	3LD9280-5DF	■	■	■	■	■	■		
			3LD9240-5DF							■	■
Rotary operating mechanisms										
	• Lockable in 0 position with up to 3 padlocks									
	Version	Mounting	Catalog No.							
	For main control switches	Center-hole mounting	3LD9224-1D	■	■	■					
			3LD9284-1D				■				
		Four-hole mounting	3LD9224-1B	■	■	■					
			3LD9284-1B				■	■	■		
	For EMERGENCY-STOP switches	Center-hole mounting	3LD9224-3D	■	■	■					
			3LD9284-3D				■				
		Four-hole mounting	3LD9224-3B	■	■	■					
			3LD9284-3B				■	■	■		

Accessories for front mounting

			3LD20 (16 A)	3LD21 (25 A)	3LD22 (32 A)	3LD25 (63 A)	3LD27 (100 A)	3LD28 (125 A)	3LD23 (160 A)	3LD24 (250 A)
Knob-operated mechanisms										
	• Lockable in 0 position with up to 3 padlocks									
	Version	**Mounting**	**Catalog No.**							
	For main control switches	Four-hole mounting	3LD9243-1B						■	■
	For EMERGENCY-STOP switches	Four-hole mounting	3LD9243-3B						■	■
Terminal covers										
	• Pack of 4 units									
	Number of poles		**Catalog No.**							
	1-pole		3LD9201-2A	■						
			3LD9221-2A		■	■				
			3LD9251-2A				■			
			3LD9281-2A					■	■	
			3LD9241-2A						■	■
	3-pole		3LD9221-0A		■	■				
			3LD9251-0A				■			
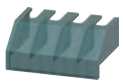	4-pole		3LD9201-1A	■						
Inscription labels										
	• Pack of 10 units									
	Inscription		**Catalog No.**							
	German / English (Hauptschalter / Main Switch)		3LD9286-1A	■	■	■	■	■	■	
	Without inscription		3LD9286-4A	■	■	■	■	■	■	
Assembly tools										
	• For center-hole mounting with nut • Pack of 5 units									
	Version		**Catalog No.**							
	For main control switches and EMERGENCY-STOP switches		3LD9256-0A	■	■	■	■			

3LD2 main control switches, panel mounting



	Operating mechanisms, black	
Number of poles	3P	
	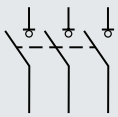	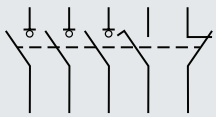
Uninterrupted current I_u At AC-21A, 380 ... 440 V	Operational power P At AC-23A, 380 ... 440 V	Operational power P At AC-3A, 380 ... 440 V	Without auxiliary switch	1 NO + 1 NC (standard version)
Door-coupling rotary operating mechanism, four-hole mounting				
16 A	7.5 kW	5.5 kW	3LD2013-0TK51	3LD2013-0TK51 + 3LD9200-5C
25 A	9.5 kW	7.5 kW	3LD2113-0TK51	3LD2113-0TK51 + 3LD9200-5C
32 A	11.5 kW	9.5 kW	3LD2213-0TK51	3LD2213-0TK51 + 3LD9200-5C
63 A	22 kW	18.5 kW	3LD2514-0TK51	3LD2514-0TK51 + 3LD9200-5C
100 A	37 kW	30 kW	3LD2714-0TK51	3LD2714-0TK51 + 3LD9200-5C
125 A	45 kW	37 kW	3LD2814-0TK51	3LD2814-0TK51 + 3LD9200-5C
160 A	75 kW	50 kW	3LD2318-0TK11	3LD2318-0TK11 + 3LD9200-5C
250 A	132 kW	110 kW	3LD2418-0TK11	3LD2418-0TK11 + 3LD9200-5C
Door-coupling rotary operating mechanism, center-hole mounting Ø 22.5 mm				
16 A	7.5 kW	5.5 kW	3LD2044-0TK51	3LD2044-0TK51 + 3LD9200-5C
25 A	9.5 kW	7.5 kW	3LD2144-0TK51	3LD2144-0TK51 + 3LD9200-5C
32 A	11.5 kW	9.5 kW	3LD2244-0TK51	3LD2244-0TK51 + 3LD9200-5C
63 A	22 kW	18.5 kW	3LD2545-0TK51	3LD2545-0TK51 + 3LD9200-5C
Defeatable door-coupling knob-operated mechanism, four-hole mounting				
16 A	7,5 kW	5,5 kW	3LD2017-0TK11	3LD2017-0TK11 + 3LD9200-5C
32 A	11,5 kW	9,5 kW	3LD2217-0TK11	3LD2217-0TK11 + 3LD9200-5C
63 A	22 kW	18,5 kW	3LD2517-0TK11	3LD2517-0TK11 + 3LD9200-5C

Scope of supply:
- Including terminal covers for the infeed side
- Up to 125 A with integrated tolerance compensation

Mounting:
- Up to 125 A using screws or snap-on mounting on 35 mm mounting rails

Accessories, see pages 18/78 to 18/79

3LD switch disconnectors

3LD2 main control switches, panel mounting, 25 ... 50 kA_{eff}



3P+N		6P	
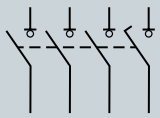	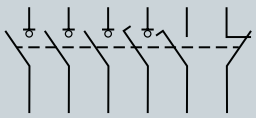	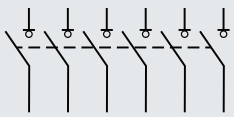	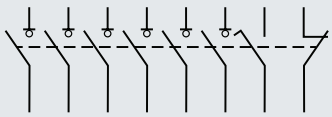
Without auxiliary switch	1 NO + 1 NC (standard version)	Without auxiliary switch	1 NO + 1 NC (standard version)
3LD2013-1TL51	3LD2013-1TL51 + 3LD9200-5C	–	–
3LD2113-1TL51	3LD2113-1TL51 + 3LD9200-5C	3LD2113-3VK51	3LD2113-4VP51
3LD2213-1TL51	3LD2213-1TL51 + 3LD9200-5C	–	–
3LD2514-1TL51	3LD2514-1TL51 + 3LD9200-5C	–	–
3LD2714-0TK51 + 3LD9280-0C	3LD2714-0TK51 + 3LD9280-0C + 3LD9200-5C	–	–
3LD2814-0TK51 + 3LD9280-0C	3LD2814-0TK51 + 3LD9280-0C + 3LD9200-5C	–	–
3LD2318-1TL11	3LD2318-1TL11 + 3LD9200-5C	3LD2318-3VK11	3LD2318-3VK11 + 3LD9200-5C
3LD2418-1TL11	3LD2418-1TL11 + 3LD9200-5C	3LD2418-3VK11	3LD2418-3VK11 + 3LD9200-5C
3LD2044-1TL51	3LD2044-1TL51 + 3LD9200-5C	–	–
3LD2144-1TL51	3LD2144-1TL51 + 3LD9200-5C	–	–
3LD2244-1TL51	3LD2244-1TL51 + 3LD9200-5C	–	–
3LD2545-0TK51 + 3LD9250-0CA	3LD2545-0TK51 + 3LD9250-0CA + 3LD9200-5C	–	–
3LD2017-1TL11	3LD2017-1TL11 + 3LD9200-5C	–	–
3LD2217-1TL11	3LD2217-1TL11 + 3LD9200-5C	–	–
3LD2517-1TL11	3LD2517-1TL11 + 3LD9200-5C	–	–

3LD2 EMERGENCY-STOP switches, panel mounting



	Operating mechanisms, red/yellow	
Number of poles	3P	
	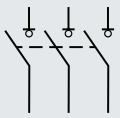	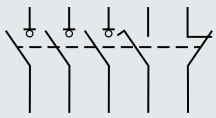
Uninterrupted current I_u At AC-21A, 380 ... 440 V	Operational power P At AC-23A, 380 ... 440 V	Operational power P At AC-3A, 380 ... 440 V	Without auxiliary switch	1 NO + 1 NC (standard version)
Door-coupling rotary operating mechanism, four-hole mounting				
16 A	7.5 kW	5.5 kW	3LD2013-0TK53	3LD2013-0TK53 + 3LD9200-5C
25 A	9.5 kW	7.5 kW	3LD2113-0TK53	3LD2113-0TK53 + 3LD9200-5C
32 A	11.5 kW	9.5 kW	3LD2213-0TK53	3LD2213-0TK53 + 3LD9200-5C
63 A	22 kW	18.5 kW	3LD2514-0TK53	3LD2514-0TK53 + 3LD9200-5C
100 A	37 kW	30 kW	3LD2714-0TK53	3LD2714-0TK53 + 3LD9200-5C
125 A	45 kW	37 kW	3LD2814-0TK53	3LD2814-0TK53 + 3LD9200-5C
160 A	75 kW	50 kW	3LD2318-0TK13	3LD2318-0TK13 + 3LD9200-5C
250 A	132 kW	110 kW	3LD2418-0TK13	3LD2418-0TK13 + 3LD9200-5C
Door-coupling rotary operating mechanism, center-hole mounting Ø 22.5 mm				
16 A	7.5 kW	5.5 kW	3LD2044-0TK53	3LD2044-0TK53 + 3LD9200-5C
25 A	9.5 kW	7.5 kW	3LD2144-0TK53	3LD2144-0TK53 + 3LD9200-5C
32 A	11.5 kW	9.5 kW	3LD2244-0TK53	3LD2244-0TK53 + 3LD9200-5C
63 A	22 kW	18.5 kW	3LD2545-0TK53	3LD2545-0TK53 + 3LD9200-5C
Defeatable door-coupling knob-operated mechanism, four-hole mounting				
16 A	7,5 kW	5,5 kW	3LD2017-0TK13	3LD2017-0TK13 + 3LD9200-5C
32 A	11,5 kW	9,5 kW	3LD2217-0TK13	3LD2217-0TK13 + 3LD9200-5C
63 A	22 kW	18,5 kW	3LD2517-0TK13	3LD2517-1TL13 + 3LD9200-5C

Scope of supply:
- Including terminal covers for the infeed side
- Up to 125 A with integrated tolerance compensation

Mounting:
- Up to 125 A using screws or snap-on mounting on 35 mm mounting rails

Accessories, see pages 18/78 to 18/79

3LD switch disconnectors

3LD2 EMERGENCY-STOP switches, panel mounting, 25 ... 50 kA_{eff}



3P+N		6P	
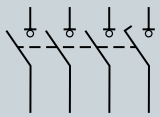	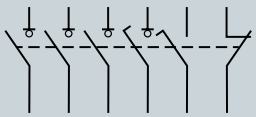	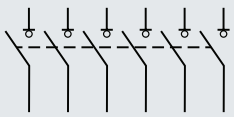	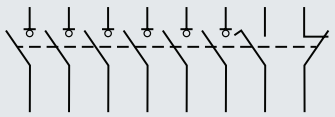
Without auxiliary switch	**1 NO + 1 NC (standard version)**	**Without auxiliary switch**	**1 NO + 1 NC (standard version)**
3LD2013-1TL53	3LD2013-1TL53 + 3LD9200-5C	–	–
3LD2113-1TL53	3LD2113-1TL53 + 3LD9200-5C	3LD2113-3VK53	3LD2113-4VP53
3LD2213-1TL53	3LD2213-1TL53 + 3LD9200-5C	–	–
3LD2514-1TL53	3LD2514-1TL53 + 3LD9200-5C	–	–
3LD2714-0TK53 + 3LD9280-0C	3LD2714-0TK53 + 3LD9280-0C + 3LD9200-5C	–	–
3LD2814-0TK53 + 3LD9280-0C	3LD2814-0TK53 + 3LD9280-0C + 3LD9200-5C	–	–
3LD2318-1TL13	3LD2318-1TL13 + 3LD9200-5C	3LD2318-3VK13	3LD2318-3VK13 + 3LD9200-5C
3LD2418-1TL13	3LD2418-1TL13 + 3LD9200-5C	3LD2418-3VK13	3LD2418-3VK13 + 3LD9200-5C
3LD2044-1TL53	3LD2044-1TL53 + 3LD9200-5C	–	–
3LD2144-1TL53	3LD2144-1TL53 + 3LD9200-5C	–	–
3LD2244-1TL53	3LD2244-1TL53 + 3LD9200-5C	–	–
3LD2545-0TK53 + 3LD9250-0CA	3LD2545-0TK53 + 3LD9250-0CA + 3LD9200-5C	–	–
3LD2017-1TL13	3LD2017-1TL13 + 3LD9200-5C	–	–
3LD2217-1TL13	3LD2217-0TK13 + 3LD9200-5C	–	–
3LD2517-1TL13	3LD2517-1TL13 + 3LD9200-5C	–	–

Accessories for panel mounting

			3LD20 (16 A)	3LD21 (25 A)	3LD22 (32 A)	3LD25 (63 A)	3LD27 (100 A)	3LD28 (125 A)	3LD23 (160 A)	3LD24 (250 A)
Switching contacts for N conductor (4th contact)										
	**Contacts**	**Catalog No.**								
	Leading switch-on, lagging switch-off	3LD9220-0C		■	■					
		3LD9250-0CA				■				
		3LD9280-0C					■	■		
		3LD9240-0C							■	■
N/PE terminals										
	**Contacts**	**Catalog No.**								
	Through-type	3LD9200-2C	■							
		3LD9220-2C		■	■					
		3LD9250-2CA				■				
		3LD9280-2C					■	■		
		3LD9240-2C							■	■
Auxiliary switches (standard version)										
	• For mounting on the left and/or right • Lagging switch-on, leading switch-off									
	Contacts	**Contact surface**	**Catalog No.**							
	1 NO + 1 NC	Standard	3LD9200-5C	■	■	■	■	■	■	■	■
		Gold-plated	3LD9200-5CF	■	■	■	■	■	■	■	■
	2 NO	Standard	3LD9200-6C	■	■	■	■	■	■	■	■
Auxiliary switch for mounting on the front										
	• Mounted on the switch shaft • For long leading times (20 ... 150 ms)									
	Contacts	**Contact surface**	**Catalog No.**							
	1 NO + 1 NC	Standard	3LD9280-5D	■	■	■	■	■	■		
			3LD9240-5D							■	■
		Gold-plated	3LD9280-5DF	■	■	■	■	■	■		
			3LD9240-5DF							■	■
Rotary operating mechanisms										
	• Lockable in 0 position with up to 3 padlocks									
	Version	**Mounting**	**Catalog No.**							
	For main control switches	Center-hole mounting	3LD9224-1D	■	■	■					
			3LD9284-1D				■				
		Four-hole mounting	3LD9224-1B	■	■	■					
			3LD9284-1B				■	■	■		
	For EMERGENCY-STOP switches	Center-hole mounting	3LD9224-3D	■	■	■					
			3LD9284-3D				■				
		Four-hole mounting	3LD9224-3B	■	■	■					
			3LD9284-3B				■	■	■		
Knob-operated mechanisms										
	• Lockable in 0 position with up to 3 padlocks									
	Version	**Mounting**	**Catalog No.**							
	For main control switches	Four-hole mounting	3LD9243-1B						■	■
	For EMERGENCY-STOP switches	Four-hole mounting	3LD9243-3B						■	■

Accessories for panel mounting

			3LD20 (16 A)	3LD21 (25 A)	3LD22 (32 A)	3LD25 (63 A)	3LD27 (100 A)	3LD28 (125 A)	3LD23 (160 A)	3LD24 (250 A)
8UC7.. door-coupling rotary operating mechanisms										
 • To achieve defeatability from 3LD27 (100 A) to 3LD24 (250 A). A coupling driver and a switching shaft must also be ordered.										
Type	**Version**	**Catalog No.**								
8UC71	Standard	8UC7110-1BB					■	■		
	EMERGENCY-STOP	8UC7120-3BB					■	■		
8UC72	Standard	8UC7210-1BB							■	■
	EMERGENCY-STOP	8UC7220-3BB							■	■
Coupling drivers										
	**Version**	**Catalog No.**								
	For 8UC71 door-coupling rotary operating mechanisms	8UC6011					■	■		
	For 8UC72 door-coupling rotary operating mechanisms	8UC6012							■	■
Switching shafts										
	**Cross-section**	**Length**	**Catalog No.**							
	6 × 6 mm	300 mm	3LD9205-0C	■	■	■	■	■	■	
		600 mm	3LD9205-2C	■	■	■	■	■	■	
	8 × 8 mm	300 mm	3LD9245-0C						■	■
		600 mm	3LD9245-2C						■	■
Coupling pieces										
 • Without ON-lock										
		Catalog No.								
		3LD9242-4F							■	■
Terminal covers										
• Pack of 4 units										
Number of poles		**Catalog No.**								
 1-pole		3LD9201-2A	■							
		3LD9221-2A		■	■					
		3LD9251-2A				■				
		3LD9281-2A					■	■		
		3LD9241-2A							■	■
 3-pole		3LD9221-0A		■	■					
		3LD9251-0A				■				
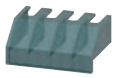 4-pole		3LD9201-1A	■							
Inscription labels										
 • Pack of 10 units • Cannot be used with defeatable 3LD2.17 door-coupling rotary operating mechanisms										
Inscription		**Catalog No.**								
German / English (Hauptschalter / Main Switch)		3LD9286-1A	■	■	■	■	■	■		
Without inscription		3LD9286-4A	■	■	■	■	■	■		
Assembly tools										
 • For center-hole mounting with nut • Pack of 5 units										
Version		**Catalog No.**								
For main control switches and EMERGENCY-STOP switches		3LD9256-0A	■	■	■	■				

3LD2 main control switches, installation in distribution boards



Number of poles	Operating mechanisms, black	
	3P	
	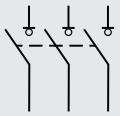	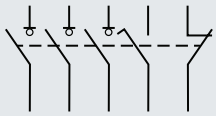
Uninterrupted current I_u At AC-21A, 380 ... 440 V	Operational power P At AC-23A, 380 ... 440 V	Operational power P At AC-3A, 380 ... 440 V	Without auxiliary switch	1 NO + 1 NC (standard version)
Knob-operated mechanisms with masking plate				
16 A	7.5 kW	5.5 kW	3LD2030-0TK11	3LD2030-0TK11 + 3LD9200-5C
25 A	9.5 kW	7.5 kW	3LD2130-0TK11	3LD2130-0TK11 + 3LD9200-5C
32 A	11.5 kW	9.5 kW	3LD2230-0TK11	3LD2230-0TK11 + 3LD9200-5C
63 A	22 kW	18.5 kW	3LD2530-0TK11	3LD2530-0TK11 + 3LD9200-5C
100 A	37 kW	30 kW	3LD2730-0TK11	3LD2730-0TK11 + 3LD9200-5C
125 A	45 kW	37 kW	3LD2830-0TK11	3LD2830-0TK11 + 3LD9200-5C
160 A	75 kW	50 kW	3LD2330-0TK11	3LD2330-0TK11 + 3LD9200-5C
250 A	132 kW	110 kW	3LD2430-0TK11	3LD2430-0TK11 + 3LD9200-5C

Scope of supply:
- 3LD23/3LD24 including terminal covers for the infeed side

Mounting:
- Up to 125 A using screws or snap-on mounting on 35 mm mounting rails
- Up to 125 A cap and mounting dimensions acc. to DIN 43880

Accessories

			3LD20 (16 A)	3LD21 (25 A)	3LD22 (32 A)	3LD25 (63 A)	3LD27 (100 A)	3LD28 (125 A)	3LD23 (160 A)	3LD24 (250 A)
Switching contacts for N conductor (4th contact)										
	Contacts	Catalog No.								
	Leading switch-on, lagging switch-off	3LD9220-0C		■	■					
		3LD9250-0CA				■				
		3LD9280-0C					■	■		
		3LD9240-0C							■	■
N/PE terminals										
	Contacts	Catalog No.								
	Through-type	3LD9200-2C	■							
		3LD9220-2C		■	■					
		3LD9250-2CA				■				
		3LD9280-2C					■	■		
		3LD9240-2C							■	■
Auxiliary switches (standard version)										
	• For mounting on the left and/or right • Lagging switch-on, leading switch-off									
	Contacts	Contact surface	Catalog No.							
	1 NO + 1 NC	Standard	3LD9200-5C	■	■	■	■	■	■	■	■
		Gold-plated	3LD9200-5CF	■	■	■	■	■	■	■	■
	2 NO	Standard	3LD9200-6C	■	■	■	■	■	■	■	■

3LD switch disconnectors

3LD2 main control switches, installation in distribution boards, 25 … 50 kA_{eff}



3P+N

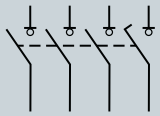

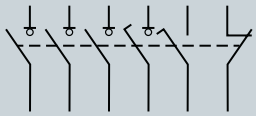

Without auxiliary switch	1 NO + 1 NC (standard version)
3LD2030-1TL11	3LD2030-1TL11 + 3LD9200-5C
3LD2130-0TK11 + 3LD9220-0C	3LD2130-0TK11 + 3LD9220-0C + 3LD9200-5C
3LD2230-0TK11 + 3LD9220-0C	3LD2230-0TK11 + 3LD9220-0C + 3LD9200-5C
3LD2530-0TK11 + 3LD9250-0CA	3LD2530-0TK11 + 3LD9250-0CA + 3LD9200-5C
3LD2730-0TK11 + 3LD9280-0C	3LD2730-0TK11 + 3LD9280-0C + 3LD9200-5C
3LD2830-0TK11 + 3LD9280-0C	3LD2830-0TK11 + 3LD9280-0C + 3LD9200-5C
3LD2330-0TK11 + 3LD9240-0C	3LD2330-0TK11 + 3LD9240-0C + 3LD9200-5C
3LD2430-0TK11 + 3LD9240-0C	3LD2430-0TK11 + 3LD9240-0C + 3LD9200-5C

Terminal covers

- Pack of 4 units

	Number of poles	Catalog No.	3LD20 (16 A)	3LD21 (25 A)	3LD22 (32 A)	3LD25 (63 A)	3LD27 (100 A)	3LD28 (125 A)	3LD23 (160 A)	3LD24 (250 A)
	1-pole	3LD9201-2A	■							
		3LD9221-2A		■	■					
		3LD9251-2A				■				
		3LD9281-2A					■	■		
		3LD9241-2A							■	■
	3-pole	3LD9221-0A		■	■					
		3LD9251-0A				■				
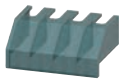	4-pole	3LD9201-1A	■							

3LD2 EMERGENCY-STOP switches, installation in distribution boards, 25 ... 50 kA_{eff}

3LD2 EMERGENCY-STOP switches, installation in distribution boards



Number of poles	Operating mechanisms, red/yellow 3P	
	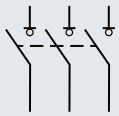	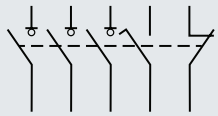

Uninterrupted current I_u At AC-21A, 380 ... 440 V	Operational power P At AC-23A, 380 ... 440 V	Operational power P At AC-3A, 380 ... 440 V	Without auxiliary switch	1 NO + 1 NC (standard version)
Knob-operated mechanisms with masking plate				
16 A	7.5 kW	5.5 kW	3LD2030-0TK13	3LD2030-0TK13 + 3LD9200-5C
25 A	9.5 kW	7.5 kW	3LD2130-0TK13	3LD2130-0TK13 + 3LD9200-5C
32 A	11.5 kW	9.5 kW	3LD2230-0TK13	3LD2230-0TK13 + 3LD9200-5C
63 A	22 kW	18.5 kW	3LD2530-0TK13	3LD2530-0TK13 + 3LD9200-5C
100 A	37 kW	30 kW	3LD2730-0TK13	3LD2730-0TK13 + 3LD9200-5C
125 A	45 kW	37 kW	3LD2830-0TK13	3LD2830-0TK13 + 3LD9200-5C
160 A	75 kW	50 kW	3LD2330-0TK13	3LD2330-0TK13 + 3LD9200-5C
250 A	132 kW	110 kW	3LD2430-0TK13	3LD2430-0TK13 + 3LD9200-5C

Scope of supply:
- 3LD23/3LD24 including terminal covers for the infeed side

Mounting:
- Up to 125 A using screws or snap-on mounting on 35 mm mounting rails
- Up to 125 A cap and mounting dimensions acc. to DIN 43880

Accessories

			3LD20 (16 A)	3LD21 (25 A)	3LD22 (32 A)	3LD25 (63 A)	3LD27 (100 A)	3LD28 (125 A)	3LD23 (160 A)	3LD24 (250 A)
Switching contacts for N conductor (4th contact)										
	Contacts	Catalog No.								
	Leading switch-on, lagging switch-off	3LD9220-0C		■	■					
		3LD9250-0CA				■				
		3LD9280-0C					■	■		
		3LD9240-0C							■	■
N/PE terminals										
	Contacts	Catalog No.								
	Through-type	3LD9200-2C	■							
		3LD9220-2C		■	■					
		3LD9250-2CA				■				
		3LD9280-2C					■	■		
		3LD9240-2C							■	■
Auxiliary switches (standard version)										
	• For mounting on the left and/or right • Lagging switch-on, leading switch-off									
	Contacts	Contact surface	Catalog No.							
	1 NO + 1 NC	Standard	3LD9200-5C	■	■	■	■	■	■	■	■
		Gold-plated	3LD9200-5CF	■	■	■	■	■	■	■	■
	2 NO	Standard	3LD9200-6C	■	■	■	■	■	■	■	■
Terminal covers										
	• Pack of 4 units									
	Number of poles		Catalog No.							
	1-pole		3LD9201-2A	■						
			3LD9221-2A		■	■				
			3LD9251-2A				■			
			3LD9281-2A					■	■	
			3LD9241-2A							■	■
	3-pole		3LD9221-0A		■	■				
			3LD9251-0A				■			
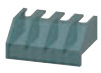	4-pole		3LD9201-1A	■						

3LD switch disconnectors

3LD2 EMERGENCY-STOP switches, installation in distribution boards, 25 … 50 kA_{eff}



3+N

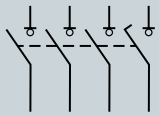

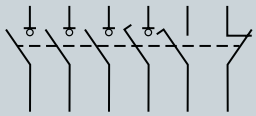

Without auxiliary switch	1 NO + 1 NC (standard version)
3LD2030-1TL13	3LD2030-1TL13 + 3LD9200-5C
3LD2130-0TK13 + 3LD9220-0C	3LD2130-0TK13 + 3LD9220-0C + 3LD9200-5C
3LD2230-0TK13 + 3LD9220-0C	3LD2230-0TK13 + 3LD9220-0C + 3LD9200-5C
3LD2530-0TK13 + 3LD9250-0CA	3LD2530-0TK13 + 3LD9250-0CA + 3LD9200-5C
3LD2730-0TK13 + 3LD9280-0C	3LD2730-0TK13 + 3LD9280-0C + 3LD9200-5C
3LD2830-0TK13 + 3LD9280-0C	3LD2830-0TK13 + 3LD9280-0C + 3LD9200-5C
3LD2330-0TK13 + 3LD9240-0C	3LD2330-0TK13 + 3LD9240-0C + 3LD9200-5C
3LD2430-0TK13 + 3LD9240-0C	3LD2430-0TK13 + 3LD9240-0C + 3LD9200-5C

Disconnect Switches

3LD switch disconnectors

DC isolators, 50 kA_{rms}

DC isolators



Operating mechanisms, black

Number of poles 8P

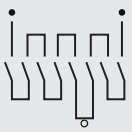

Mains voltage	Rated operational current I_e At DC-21A, 800 V DC	Rated operational current I_e At DC-22A, 800 V DC	Without auxiliary switch
Knob-operated mechanisms			
800 V DC	32 A	16 A	3LD2230-8VQ11-0AF6

Accessories for 3LD2 main control and EMERGENCY-STOP switches

Additional poles

				3LD20 (16 A)	3LD21 (25 A)	3LD22 (32 A)	3LD25 (63 A)	3LD27 (100 A)	3LD28 (125 A)	3LD23 (160 A)	3LD24 (250 A)
Switching contacts for N conductor (4th contact)											
	Version	Contacts	Catalog No.								
	For front mounting	Leading switch-on, lagging switch-off	3LD9220-0B		■	■					
			3LD9250-0BA				■				
			3LD9280-0B					■	■		
			3LD9240-0B							■	■
	For panel mounting, installation in distribution boards	Leading switch-on, lagging switch-off	3LD9220-0C		■	■					
			3LD9250-0CA				■				
			3LD9280-0C					■	■		
			3LD9240-0C							■	■
N/PE terminals											
	Version	Contacts	Catalog No.								
	For front mounting	Through-type	3LD9200-2B	■							
			3LD9220-2B		■	■					
			3LD9250-2BA				■				
			3LD9280-2B					■	■		
			3LD9240-2B							■	■
	For panel mounting, installation in distribution boards	Through-type	3LD9200-2C	■							
			3LD9220-2C		■	■					
			3LD9250-2CA				■				
			3LD9280-2C					■	■		
			3LD9240-2C							■	■
Auxiliary switches (standard version)											
	• For mounting on the left and/or right • Lagging switch-on, leading switch-off										
	Version	Contacts	Catalog No.								
	For front mounting	1 NO + 1 NC, standard	3LD9200-5B	■	■	■	■	■	■	■	■
		1 NO + 1 NC, gold-plated	3LD9200-5BF	■	■	■	■	■	■	■	■
	For panel mounting, installation in distribution boards	1 NO + 1 NC, standard	3LD9200-5C	■	■	■	■	■	■	■	■
		1 NO + 1 NC, gold-plated	3LD9200-5CF	■	■	■	■	■	■	■	■
		2 NO, standard	3LD9200-6C	■	■	■	■	■	■	■	■
Auxiliary switch for mounting on the front											
	• Mounted on the front of the switch shaft • For four-hole front mounting and panel mounting only • For long leading times (20 ... 150 ms)										
	Contacts	Contact surface	Catalog No.								
	1 NO + 1 NC	Standard	3LD9280-5D	■	■	■	■	■	■		
			3LD9240-5D							■	■
		Gold-plated	3LD9280-5DF	■	■	■	■	■	■		
			3LD9240-5DF							■	■

Accessories for 3LD2 main control and EMERGENCY-STOP switches

Operating mechanisms

				3LD20 (16 A)	3LD21 (25 A)	3LD22 (32 A)	3LD25 (63 A)	3LD27 (100 A)	3LD28 (125 A)	3LD23 (160 A)	3LD24 (250 A)
Rotary operating mechanisms											
• Lockable in 0 position with up to 3 padlocks • Center-hole mounting, including seal and nut • Four-hole mounting, including seal											
	**Switch**	**Mounting**	**Catalog No.**								
	For main control switches	Center-hole mounting	3LD9224-1D	■	■	■					
			3LD9284-1D				■	■	■		
		Four-hole mounting	3LD9224-1B	■	■	■					
			3LD9284-1B				■	■	■		
	For EMERGENCY-STOP switches	Center-hole mounting	3LD9224-3D	■	■	■					
			3LD9284-3D				■	■	■		
		Four-hole mounting	3LD9224-3B	■	■	■					
			3LD9284-3B				■	■	■		
Knob-operated mechanisms											
	• Lockable in 0 position with up to 3 padlocks • Including seal										
	Switch	**Mounting**	**Catalog No.**								
	For main control switches	Four-hole mounting	3LD9243-1B							■	■
	For EMERGENCY-STOP switches	Four-hole mounting	3LD9243-3B							■	■
Switching shafts											
	**Version**	**Cross-section**	**Length**	**Catalog No.**							
	For panel mounting	6 × 6 mm	300 mm	3LD9205-0C	■	■	■	■	■	■	
			600 mm	3LD9205-2C	■	■	■	■	■	■	
		8 × 8 mm	300 mm	3LD9245-0C							■	■
			600 mm	3LD9245-2C							■	■
Coupling pieces											
	• Without ON-lock										
	Version			**Catalog No.**							
	For panel mounting			3LD9242-4F						■	■

Other accessories

			3LD20 (16 A)	3LD21 (25 A)	3LD22 (32 A)	3LD25 (63 A)	3LD27 (100 A)	3LD28 (125 A)	3LD23 (160 A)	3LD24 (250 A)
Terminal covers										
• Pack of 4 units										
	Number of poles	**Catalog No.**								
	1-pole	3LD9201-2A	■							
		3LD9221-2A		■	■					
		3LD9251-2A				■				
		3LD9281-2A					■	■		
		3LD9241-2A							■	■
	3-pole	3LD9221-0A		■	■					
		3LD9251-0A				■				
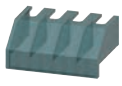	4-pole	3LD9201-1A	■							
Inscription labels										
	• Pack of 10 units									
	Inscription	**Catalog No.**								
	German / English (Hauptschalter / Main Switch)	3LD9286-1A	■	■	■	■	■	■		
	Without inscription	3LD9286-4A	■	■	■	■	■	■		
Assembly tools										
	• For center-hole mounting with nut • Pack of 5 units									
	Switch	**Catalog No.**								
	For main control switches and EMERGENCY-STOP switches	3LD9256-0A	■	■	■	■				

3LD switch disconnectors

System overview of 3LD5 UL main control and EMERGENCY-STOP switches

Basic units for front mounting



3LD5020 (3-pole)



3LD5020 (4-pole)



3LD5420 (3-pole)



3LD5420 (4-pole)

Basic units, panel mounting with direct operating mechanism



3LD5000 (3-pole)



3LD5000 (4-pole)



3LD5400 (3-pole)



3LD5400 (4-pole)

Basic units, panel mounting with door-coupling rotary operating mechanism



3LD5010 (3-pole)



3LD5010 (4-pole)



3LD5410 (3-pole)



3LD5410 (4-pole)

Additional poles and auxiliary switches



N switching contact



N/PE terminals (through-type)



Auxiliary switches (standard version)



Auxiliary switch for mounting on the front

Operating mechanisms



Rotary operators for four-hole mounting



Coupling heads with and without tolerance compensation



Supplementary handles for UL508A/NFPA79



Switching shafts

Other accessories



Terminal covers, 1-pole



Terminal covers, 3 and 4-pole



Inscription labels (with and without inscription)

Note:
You will find a detailed range of accessories with the basic units.

Mounting concept and accessories

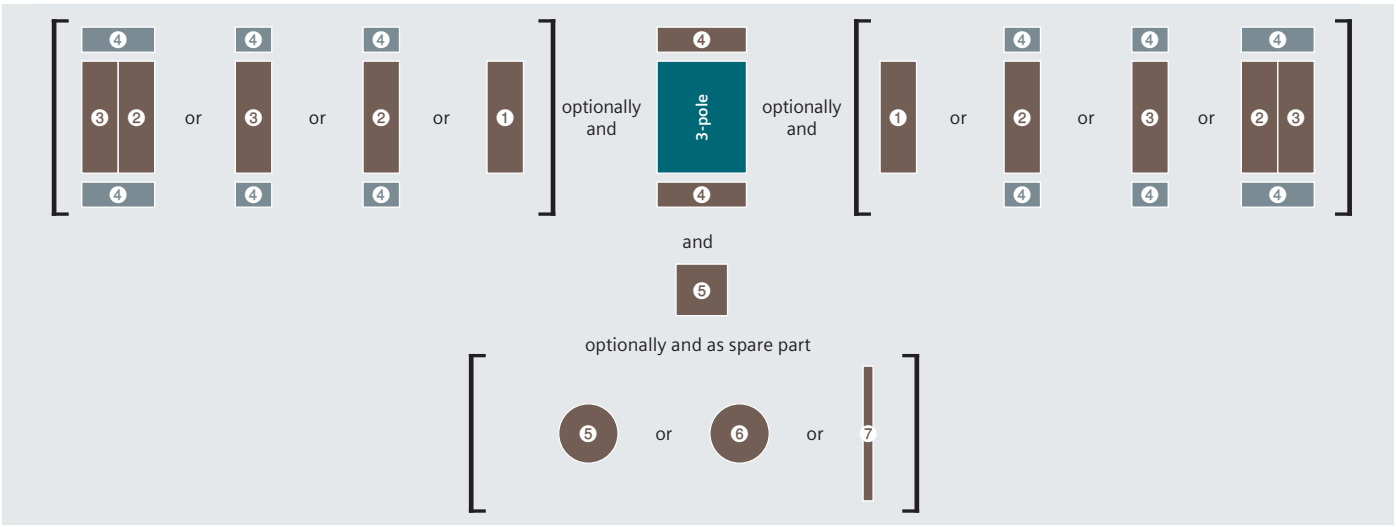

Legend
❶ Auxiliary switch
❷ N switching contact [1)]
❸ N/PE terminal
❹ Terminal cover
❺ Rotary operating mechanism, four-hole mounting
❻ Knob-operated mechanism, four-hole mounting
❼ Switching shaft (300 oder 600 mm)

[1)] The N switching contact ❷ first has to be mounted on the basic unit

Main control switches acc. to UL

The certification according to UL489 makes the 3LD5 UL ideal for use as a main control switch for machinery and plants for export to the NAFTA states. The variety of accessories makes it especially suitable as a main disconnect switch for industrial machinery. The switch is also certified according to UL508 and can also be used as a manual motor controller.

Mounting types

Front mounting of basic units



The switches for front mounting are mounted on the inside of covers, side panels or, if applicable, control cabinet doors (depending on the applicable standard and switching function). Installation is achieved by 4-hole mounting of the handle. This switch is especially suitable when door interlocking is not required or is implemented in a different way.

Panel mounting with direct operating mechanism



The switches for panel mounting with direct operating mechanism up to 30 A are snapped onto 35 mm standard mounting rails according to EN 60715 or screw-mounted on mounting panels. The switches for 100 to 160 A (3LD54 ... 3LD58) are exclusively screwed onto mounting panels.

Basic units, panel mounting with door-coupling rotary operating mechanism



The switches for panel mounting up to 30 A (3LD50) are snapped onto 35 mm standard mounting rails according to EN 60715 or screw-mounted on mounting panels. The switches for 100 to 160 A (3LD54 ... 3LD58) are exclusively screwed onto mounting panels. The actuators are connected to the lower section of the switch through a door coupling, which can be released in its zero position, and a 300 mm long switch shaft. The rotary operating mechanisms are also defeatable, i.e. it is possible to open the control cabinet door with a deliberate action while the switch is in the ON position. To meet the requirement acc. to UL508A/NFPA79, a supplementary handle can be mounted on the switch. Combined with the intermediate handle, the shaft can no longer be removed.

3LD5 UL main control and EMERGENCY-STOP switches, front mounting





Number of poles	Operating mechanisms, black	
	3P	3P+N
	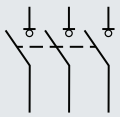	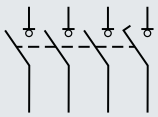

Uninterrupted current I_u At AC-21A, 380 ... 440 V	General use acc. UL489/60947-4-1	Operational power P At AC-23A, 380 ... 440 V		
Rotary operating mechanism, four-hole mounting				
32	30	15	3LD5020-0TK11	3LD5020-0TL11
63	60	30	3LD5220-0TK11	3LD5220-0TL11
100	100	45	3LD5420-0TK11	3LD5420-0TL11
125	125	55	3LD5620-0TK11	3LD5620-0TL11
160	150	75	3LD5820-0TK11	3LD5820-0TL11

Scope of supply:
- Including terminal covers for the infeed side

Accessories for front mounting

				3LD50	3LD52	3LD54	3LD56	3LD58
Switching contacts for N conductor (4th contact)								
	**Contacts**		**Catalog No.**					
	Leading switch-on, lagging switch-off		3LD9250-0BA	■				
			3LD9280-0B		■			
			3LD9240-0B			■	■	■
N/PE terminals								
	**Contacts**		**Catalog No.**					
	Through-type		3LD9250-2BA	■				
			3LD9280-2B		■			
			3LD9240-2B			■	■	■
Auxiliary switches (standard version)								
	• For mounting on the left and/or right • Lagging switch-on, leading switch-off							
	Contacts	**Contact surface**	**Catalog No.**					
	1 NO + 1 NC	Standard	3LD9200-5B	■	■	■	■	■
		Gold-plated	3LD9200-5BF	■	■	■	■	■
Auxiliary switch for mounting on the front								
	• Mounted on the front of the switch shaft • For long leading times (20 ... 150ms)							
	Contacts	**Contact surface**	**Catalog No.**					
	1 NO + 1 NC	Standard	3LD9280-5D	■	■			
			3LD9240-5D			■	■	■
		Gold-plated	3LD9280-5DF	■	■			
			3LD9240-5DF			■	■	■
Rotary operating mechanisms								
	• Auxiliary switch for mounting on the front							
	Version		**Catalog No.**					
	For main control switches		3LD9284-1B	■	■			
	For EMERGENCY-STOP switches		3LD9284-3B	■	■			

3LD switch disconnectors

3LD5 UL main control and EMERGENCY-STOP switches, front mounting, SCCR 50 - 65 kA





Operating mechanisms, red/yellow

3P	3P+N
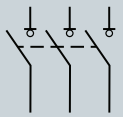	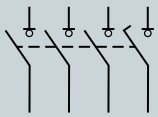
3LD5020-0TK13	3LD5020-0TL13
3LD5220-0TK13	3LD5220-0TL13
3LD5420-0TK13	3LD5420-0TL13
3LD5620-0TK13	3LD5620-0TL13
3LD5820-0TK13	3LD5820-0TL13

		3LD50	3LD52	3LD54	3LD56	3LD58
Knob-operated mechanisms						
	• Lockable in 0 position with up to 3 padlocks					
Version	**Catalog No.**					
For main control switches	3LD9243-1B			■	■	■
For EMERGENCY-STOP switches	3LD9284-3B			■	■	■
Terminal covers						
	• Pack of 4 units					
Number of poles	**Catalog No.**					
 1-pole	3LD9251-2A	■				
	3LD9281-2A		■			
	3LD9241-2A			■	■	■
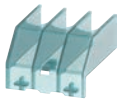 3-pole	3LD9251-0A	■				
Inscription labels						
	• Pack of 10 units					
Inscription	**Catalog No.**					
German / English (Hauptschalter / Main Switch)	3LD9286-1A	■	■	■	■	■
Without inscription	3LD9286-4A	■	■	■	■	■

3LD5 UL main control and EMERGENCY-STOP switches, panel mounting with direct operating mechanism




Number of poles	Operating mechanisms, black	
	3P	3P+N
	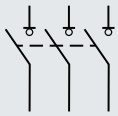	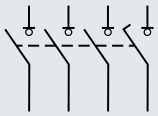
Uninterrupted current I_u At AC-21A, 380 ... 440 V / **General use acc. UL489/508** / **Operational power P At AC-23A, 380 ... 440 V**		
Rotary operating mechanism, four-hole mounting		
32 / 30 / 15	3LD5000-0TK11	3LD5000-0TL11
63 / 60 / 30	3LD5200-0TK11	3LD5200-0TL11
100 / 100 / 45	3LD5400-0TK11	3LD5400-0TL11
125 / 125 / 55	3LD5600-0TK11	3LD5600-0TL11
160 / 150 / 75	3LD5800-0TK11	3LD5800-0TL11

Scope of supply:
- Including terminal covers for the infeed side

Accessories for panel mounting with direct operating mechanisms

				3LD50	3LD52	3LD54	3LD56	3LD58
Switching contacts for N conductor (4th contact)								
	**Contacts**		**Catalog No.**					
	Leading switch-on, lagging switch-off		3LD9250-0CA	■				
			3LD9280-0C		■			
			3LD9240-0C			■	■	■
N/PE terminals								
	**Contacts**		**Catalog No.**					
	Through-type		3LD9250-2CA	■				
			3LD9280-2C		■			
			3LD9240-2C			■	■	■
Auxiliary switches								
	• For mounting on the left and/or right • Lagging switch-on, leading switch-off							
	Contacts	**Contact surface**	**Catalog No.**					
	1 NO + 1 NC	Standard	3LD9200-5C	■	■	■	■	■
		Gold-plated	3LD9200-5CF	■	■	■	■	■
Terminal covers								
	• Pack of 4 units							
	Number of poles		**Catalog No.**					
	1-pole		3LD9251-2A	■				
			3LD9281-2A		■			
			3LD9241-2A			■	■	■
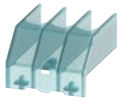	3-pole		3LD9251-0A	■				

3LD switch disconnectors

3LD5 UL main control and EMERGENCY-STOP switches, panel mounting, direct operating mechanism, SCCR 50 ... 65 kA





Operating mechanisms, red/yellow

3P	3P+N
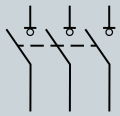	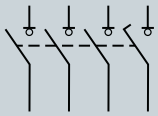
3LD5000-0TK13	3LD5000-0TL13
3LD5200-0TK13	3LD5200-0TL13
3LD5400-0TK13	3LD5400-0TL13
3LD5600-0TK13	3LD5600-0TL13
3LD5800-0TK13	3LD5800-0TL13

3LD5 UL main control and EMERGENCY-STOP switches, panel mounting with door-coupling rotary operating mechanism



Uninterrupted current I_u At AC-21A, 380 ... 440 V	General use acc. UL489/508	Operational power P At AC-23A, 380 ... 440 V	Operating mechanisms, black	
Number of poles			3P	3P+N
			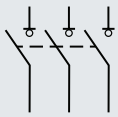	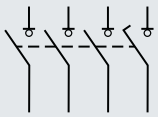
Rotary operating mechanism, four-hole mounting				
32	30	15	3LD5010-0TK11	3LD5010-0TL11
63	60	30	3LD5210-0TK11	3LD5210-0TL11
100	100	45	3LD5410-0TK11	3LD5410-0TL11
125	125	55	3LD5610-0TK11	3LD5610-0TL11
160	150	75	3LD5810-0TK11	3LD5810-0TL11

Scope of supply:
- Including terminal covers for the infeed side
- Defeatable door-coupling rotary operating mechanisms
- Without tolerance compensation

Accessories for panel mounting with door mounted rotary operator

				3LD50	3LD52	3LD54	3LD56	3LD58
Switching contacts for N conductor (4th contact)								
	Contacts		Catalog No.					
	Leading switch-on, lagging switch-off		3LD9250-0CA	■				
			3LD9280-0C		■			
			3LD9240-0C			■	■	■
N/PE terminals								
	Contacts		Catalog No.					
	Through-type		3LD9250-2CA	■				
			3LD9280-2C		■			
			3LD9240-2C			■	■	■
Auxiliary switches (standard version)								
	• For mounting on the left and/or right • Lagging switch-on, leading switch-off							
	Contacts	Contact surface	Catalog No.					
	1 NO + 1 NC	Standard	3LD9200-5C	■	■	■	■	■
		Vergoldet	3LD9200-5CF	■	■	■	■	■
Auxiliary switch for mounting on the front								
	• Mounted on the front of the switch shaft • For long leading times (20 ... 150ms)							
	Contacts	Contact surface	Catalog No.					
	1 NO + 1 NC	Standard	3LD9280-5D	■	■			
			3LD9240-5D			■	■	■
		Gold-plated	3LD9280-5DF	■	■			
			3LD9240-5DF			■	■	■
Handles								
	• Supplied with a masking frame, but without an extension shaft or coupling driver • Can be locked with up to 3 padlocks							
	Labeling	Color	Catalog No.					
	O-I	Gray	8UD1771-2AD01	■	■			
			8UD1731-2AD01			■	■	■
		Red/yellow	8UD1771-2AD05	■	■			
			8UD1731-2AD05			■	■	■

3LD switch disconnectors

3LD5 UL main control and EMERGENCY-STOP switches, panel mounting, direct operating mechanism, SCCR 50 … 65 kA




Operating mechanisms, red/yellow

3P	3P+N
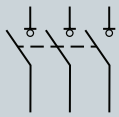	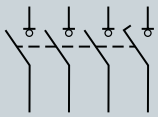
3LD5010-0TK13	3LD5010-0TL13
3LD5210-0TK13	3LD5210-0TL13
3LD5410-0TK13	3LD5410-0TL13
3LD5610-0TK13	3LD5610-0TL13
3LD5810-0TK13	3LD5810-0TL13

			3LD50	3LD52	3LD54	3LD56	3LD58
Supplementary handles for door-coupling rotary operating mechanism							
 • For requirements according to UL508A/NFPA79 • Can be locked with up to 1 padlocks in 0 position • Can only be switched on by deliberate action							
Labeling	**Color**	**Catalog No.**					
O-I	Gray	3LD9287-1C	■	■			
		3LD9247-1C			■	■	■
	Red/yellow	3LD9287-3C	■	■			
		3LD9247-3C			■	■	■
Coupling drivers							
	**Version**	**Catalog No.**					
	With tolerance compensation	8UD1900-1GA00	■	■			
		8UD1900-2GA00			■	■	■
	Without tolerance compensation	8UD1900-1HA00	■	■			
		8UD1900-2HA00			■	■	■
Terminal covers							
• Pack of 4 units							
	Number of poles	**Catalog No.**					
	1-pole	3LD9251-2A	■				
		3LD9281-2A		■			
		3LD9241-2A			■	■	■
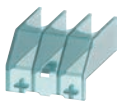	3-pole	3LD9251-0A	■				
Inscription labels							
 • Pack of 10 units							
	Inscription	**Catalog No.**					
	German / English (Hauptschalter / Main Switch)	3LD9286-1A	■	■	■	■	■
	Without inscription	3LD9286-4A	■	■	■	■	■
Switching shafts							
	**section**	**Length**	**Catalog No.**					
	6 × 6 mm	300 mm	3LD9205-0C	■	■			
		600 mm	3LD9205-2C	■	■			
	8 × 8 mm	300 mm	3LD9245-0C			■	■	■
		600 mm	3LD9245-2C			■	■	■

Accessories for 3LD5 UL main control and EMERGENCY-STOP switches

Additional poles

			3LD50	3LD52	3LD54	3LD56	3LD58
Switching contacts for N conductor (4th contact) for front mounting							
	**Contacts**	**Catalog No.**					
	Leading switch-on, lagging switch-off	3LD9250-0BA	■				
		3LD9280-0B		■			
		3LD9240-0B			■	■	■
Switching contacts for N conductor (4th contact) for panel mounting							
	**Contacts**	**Catalog No.**					
	Leading switch-on, lagging switch-off	3LD9250-0CA	■				
		3LD9280-0C		■			
		3LD9240-0C			■	■	■
N/PE terminals for front mounting							
	**Contacts**	**Catalog No.**					
	Through-type	3LD9250-2BA	■				
		3LD9280-2B		■			
		3LD9240-2B			■	■	■
N/PE terminals for panel mounting							
	**Contacts**	**Catalog No.**					
	Through-type	3LD9250-2CA	■				
		3LD9280-2C		■			
		3LD9240-2C			■	■	■
Auxiliary switches (standard version) for front mounting							
	• For mounting on the left and/or right • Lagging switch-on, leading switch-off						
	Contacts	**Contact surface**	**Catalog No.**					
	1 NO + 1 NC	Standard	3LD9200-5B	■	■	■	■	■
		Gold-plated	3LD9200-5BF	■	■	■	■	■
Auxiliary switches (standard version) for panel mounting							
	• For mounting on the left and/or right • Lagging switch-on, leading switch-off						
	Contacts	**Contact surface**	**Catalog No.**					
	1 NO + 1 NC	Standard	3LD9200-5C	■	■	■	■	■
		Gold-plated	3LD9200-5CF	■	■	■	■	■
Auxiliary switch for mounting on the front							
	• Mounted on the front of the switch shaft • For long leading times (20 ... 150ms)						
	Contacts	**Contact surface**	**Catalog No.**					
	1 NO + 1 NC	Standard	3LD9280-5D	■	■			
			3LD9240-5D			■	■	■
		Gold-plated	3LD9280-5DF	■	■			
			3LD9240-5DF			■	■	■

3LD switch disconnectors

Accessories for 3LD5 UL main control and EMERGENCY-STOP switches

Operating mechanisms

			3LD50	3LD52	3LD54	3LD56	3LD58
Rotary operating mechanism for front mounting							
	• Lockable in 0 position with up to 3 padlocks						
	Version	**Catalog No.**					
	For main control switches	3LD9284-1B	■	■			
	For EMERGENCY-STOP switches	3LD9284-3B	■	■			
Knob-operated mechanism for front mounting							
	• Lockable in 0 position with up to 3 padlocks						
	Version	**Catalog No.**					
	For main control switches	3LD9243-1B			■	■	■
	For EMERGENCY-STOP switches	3LD9284-3B			■	■	■
Handles for panel mounting							
	• Supplied with a masking frame, but without an extension shaft or coupling driver • Can be locked with up to 3 padlocks						
	Labeling / **Color**	**Catalog No.**					
	O-I / Gray	8UD1771-2AD01	■	■			
		8UD1731-2AD01			■	■	■
	/ Red/yellow	8UD1771-2AD05	■	■			
		8UD1731-2AD05			■	■	■
Supplementary handles for door-coupling rotary operating mechanism							
	• For requirements according to UL508A/NFPA79 • Can be locked with up to 1 padlocks in 0 position • Can only be switched on by deliberate action						
	Labeling / **Color**	**Catalog No.**					
	O-I / Gray	3LD9287-1C	■	■			
		3LD9247-1C			■	■	■
	/ Red/yellow	3LD9287-3C	■	■			
		3LD9247-3C			■	■	■
Coupling drivers for panel mounting with door-coupling rotary operating mechanism							
	**Version**	**Catalog No.**					
	With tolerance compensation	8UD1900-1GA00	■	■			
		8UD1900-2GA00			■	■	■
	Without tolerance compensation	8UD1900-1HA00	■	■			
		8UD1900-2HA00			■	■	■

Other accessories

			3LD50	3LD52	3LD54	3LD56	3LD58
Terminal covers							
	• Pack of 4 units						
	Number of poles	**Catalog No.**					
	1-pole	3LD9251-2A	■				
		3LD9281-2A		■			
		3LD9241-2A			■	■	■
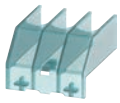	3-pole	3LD9251-0A	■				
Inscription labels							
	• Pack of 10 units						
	Inscription						
	German / English (Hauptschalter / Main Switch)	3LD9286-1A	■		■	■	■
	Without inscription	3LD9286-4A	■		■	■	■
Switching shafts							
	**section** / **Length**	**Catalog No.**					
	6 × 6 mm / 300 mm	3LD9205-0C	■	■			
	/ 600 mm	3LD9205-2C	■	■			
	8 × 8 mm / 300 mm	3LD9245-0C			■	■	■
	/ 600 mm	3LD9245-2C			■	■	■

3LD switch disconnectors

3LD2 Rotary Disconnect Switches in Non-Metallic Enclosures

Description

16–125A non-fusible switches are available in fiberglass reinforced polycarbonate enclosures which are UL approved as Type 12 & 4X and for either indoor or outdoor use. All are horsepower and load break rated. All are panel mounted and are either supplied with factory installed aux. contacts or will accept contact kits. All are compact in size while providing ample wiring space for copper line & load conductors.

Siemens Enclosed Rotary Disconnect Switches

- 16–125A, Non-Fusible
- 600VAC max. rated
- Available in both Type 12 and 4X non-metallic enclosures
- Listed and marked "suitable for use as motor disconnect" per NEC Section 430-109
- Switches are UL listed under File No. E47705 and are CSA certified under File No. 203576
- IEC 60947-3 rated and CE marked (enclosures are IP65 rated)
- HP rated
- 16–63A switches have factory installed ground bars.
- Switches are provided with knockouts
- Padlockable in OFF position with up to (3) padlocks
- Enclosures are constructed from Makrolon 9425.



Amp Rating	Catalog Number		Shipping Weight①	Horsepower Ratings			
				240V AC		480V AC	600V AC
	3 Pole, 3 Wire	3 Pole, 3 Wire with (1) NO & (1) NC Aux. Contact⑤⑥		1 Phase	3 Phase	3 Phase	3 Phase
Non-Fusible, Type 1, 4X & 12K② with Black Rotary Handle 600V AC Max.							
16	**3LD2064-0TB51-0US2**	**3LD2064-1GP51-0US2**	1	1½	3	7½	10
25	**3LD2164-0TB51-0US2**	**3LD2164-1GP51-0US2**	1	3	7½	10	15
30	**3LD2264-0TB51-0US2**	**3LD2264-1GP51-0US2**	1	3	7½	15	20
30	—	**3LD2264-1TS51-0US2③▲**	1	3	7½	15	20
30	—	**3LD2264-2TW51-0US2④▲**	1	3	7½	15	20
63	**3LD2565-0TB51-0US2**	**3LD2565-1GP51-0US2▲**	3	10	15	40	50
100	**3LD2766-0TB51-0US2**	**3LD2766-1GP51-0US2▲**	6	—	30	60	75
125	**3LD2866-0TB51-0US2**	**3LD2866-1GP51-0US2▲**	6	—	40	75	100
Non-Fusible, Type 1, 4X & 12K② with Red and Yellow Rotary Handle 600V AC Max.							
16	**3LD2064-0TB53-0US2**	**3LD2064-1GP53-0US2**	1	1½	3	7½	10
25	**3LD2164-0TB53-0US2**	**3LD2164-1GP53-0US2**	1	3	7½	10	15
30	**3LD2264-0TB53-0US2**	**3LD2264-1GP53-0US2**	1	3	7½	15	20
30	—	**3LD2264-1TS53-0US2③▲**	1	3	7½	15	20
30	—	**3LD2264-2TW53-0US2④▲**	1	3	7½	15	20
63	**3LD2565-0TB53-0US2**	**3LD2565-1GP53-0US2▲**	3	10	15	40	50
100	**3LD2766-0TB53-0US2▲**	**3LD2766-1GP53-0US2▲**	6	—	30	60	75
125	**3LD2866-0TB53-0US2▲**	**3LD2866-1GP53-0US2▲**	6	—	40	75	100

▲ Built to order. Allow 6–8 weeks for delivery.
① Carton quantity of (1). Shipping weight in pounds (lbs.).
② Approved for indoor/outdoor use. No cover interlock provided.
③ Switch is supplied with (2) NO and no NC aux. contacts.
④ Switch is supplied with (4) NO and no NC aux. contacts. Ground bar is not provided or available.
⑤ Aux. contacts break about 3 Ms before and make about 3 Ms after main switch contacts.
⑥ 6P, 25A, switch with 1 NO & 1 NC aux. contacts and a black operating handle is also available. Order catalog number **3LD2165-4VD51** (Discount Code: Pilot Devices).

Enclosed Disconnect Switch Dimensions (Inches)

Catalog Number	Ampere Rating	Dimensions			
		A	B	C	D
3LD2064-	16	5.52③	3.94	3.19	4.57
3LD2164-	25	5.52③	3.94	3.19	4.57
3LD2264-	30	5.52③	3.94	3.19	4.57
3LD2565-	63	6.93③	5.75	4.10	5.87
3LD2766-	100	11.90	8.35	5.36	7.13
3LD2866-	125	11.90	8.35	5.36	7.13

Note: 3LD2 Type switches only have top and bottom end KOs as follows:
16-30A - 1/2" & 3/4", 63A - 3/4" & 1", 100 & 25A - 1" & 1 1/4"

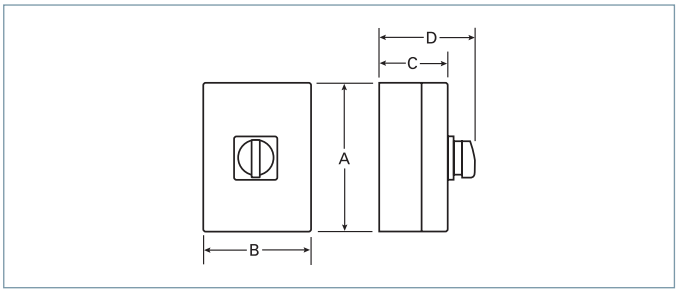

UL and CUL Short Circuit Withstand Ratings③

Ampere Rating	Short Circuit Withstand Rating and Fuse Class				
	With Line Side Fusing			With Load Side Fusing①	
	5 kA at 600V Max	10 kA at 600V Max	18 kA at 480V Max	5 kA at 480V Max	18 kA at 480V Max
16	RK5 (50A Max)	—	—	—	—
25 & 30	RK5 (80A Max)	—	—	—	—
63	RK5 (175A Max)	—	—	—	—
100 & 125	—	RK5 (200A Max)	—	—	—

Wire ranges 60/75°C Cu Only②

16 Amps	(1) #18-10 AWG
25–30 Amps	(1) #14-10 AWG
63 Amps	(1) #14-6 AWG
100–125 Amps	(1) #12-1 AWG

IEC Fuse and Withstand Ratings

Ampere Rating	gG Fuse Size	Short Circuit Rating
16	20A	5k Arms
25	25A	10k Arms
32	50A	10k Arms
63	63A	15k Arms
100	100A	20k Arms
125	125A	20k Arms

Accessories②

Switch Ampere Rating	Catalog Number	Description
16–30A	**3LD9220-2C**	Neutral Kit
63A	**3LD9250-2CA**	Neutral Kit
100–125A	**3LD9280-2C**	Neutral Kit

① For use as supplemental protection on the load side of the branch circuit over current protective device.
② Factory installed ground lugs supplied as follows: 16-30A #14-10 Cu, 63A #14-8 Cu. Ground lug not provided and is not available on catalog numbers 3LD2264-2TW51-0US2 and 3LD2264-2TW53-0US2.
③ 6.38 inches high including mounting feet.
④ 7.85 inches high including mounting feet.
⑤ 16-63A 3LD switches are also rated 5kA at 600VAC max when protected by a 3RV type MSP of the same or lesser ampere rating.

Type VBII (30-600A) with Flange Mounted Operating Handle

Features and Ordering Information

Features

- 30-600A, 600VAC and DC ratings
- 240 & 600V AC switches are UL Recognized under file number E121152, Vol. 3 and CSA certified under file number 154852
- 600V DC Photovoltaic switches are UL Recognized under file number E335018, Vol. 3 and are rated to switch 3 separate 600V DC circuits
- Visible blade quick make and break switching action
- Panel and Flange mounted assemblies facilite installation
- Panel mounted switches are variable depth
- Short circuit rating of 10,000 AIC with class H fuse, and of 200,000 AIC with class R or J fuses. PV switches are rated 10,000 AIC at 600V DC with 600V DC rated class K, J or R fuses.
- Flange mounted handles rated as Type 1, 3R & 12 or 4X are padlockable in the off position with up to (3) padlocks with 5/16 hasps
- Meets UL98 requirements and suitable for both main and branch circuit applications
- A complete line of aux contacts are available
- Load break and horsepower rated
- Defeatable cover interlock standard with all handles
- Meets NFPA79 requirements
- Seismic qualified — complies with the 2010 California Building Code (CBC) — and with the International Building Code (IBC) — Compliance Level SDS = 1.85 g



VBFS361, VBLK1 & VBH1



VBFS363F



VBNFS365, VBLK4 & VBH2

Ordering Information

1. Determine the ratings required (amps, volts, HP, Fusible, NF), the mounting needed (Panel or Flange), and select the appropriate switch.
2. For panel mounted switches with a rigid operating shaft (30-600A), order panel mounted switch, flange mounted operating handle & rigid linkage kit based on depth required.
3. For panel mounted switches with a Max-Flex operator, order panel mounted switch, Max-Flex Handle & Adapter Kit and drive cable.
4. Select accessories if required.

Type VBII (30-600A) with Flange Mounted Operating Handle

Selection

Switches—for Standard 600V Max AC or DC Applications

Switch Ampere Rating	Max. AC Voltage Rating	Catalog Number	Horsepower Rating, Switches and 3-Phase④						600 Volts DC (max)④
			240 Volts AC		480 Volts AC		600 Volts AC		
			Standard	Max.	Standard	Max.	Standard	Max.	
Fusible Panel Mounted Variable Depth Switches - 3-Pole⑤									
30	240	**VBFS321**	3	7 1/2	—	—	—	—	— ①
60	240	**VBFS322**	7 1/2	15	—	—	—	—	— ②
30	600	**VBFS361**	—	—	5	15	7 1/2	20	15 ③
60	600	**VBFS362**	—	—	15	30	15	50	30 ③
100	600	**VBFS363**	—	—	25	60	30	75	50 ③
200	600	**VBFS364**	—	—	50	125	60	150	50
400	600	**VBFS365**	—	—	100	250	125	350	— ⑨
600	600	**VBFS366**	—	—	150	400	200	500	— ⑨
Non-fusible Panel Mounted Variable Depth Switches - 3-Pole⑤									
30	600	**VBNFS361**	—	10	—	20	—	30	15 ③
60	600	**VBNFS362**	—	20	—	50	—	60	30 ③
100	600	**VBNFS363**	—	40	—	75	—	100	50 ③
200	600	**VBNFS364**	—	60	—	125	—	150	50
400	600	**VBNFS365**	—	125	—	250	—	300	— ⑨
600	600	**VBNFS366**	—	200	—	400	—	500	— ⑨
Fusible Flange Mounted Switches - 3-Pole⑥⑩									
30	240	**VBFS321F**	3	7 1/2	—	—	—	—	— ①
60	240	**VBFS322F**	7 1/2	15	—	—	—	—	— ②
30	600	**VBFS361F**	—	—	5	15	7 1/2	20	15 ③
60	600	**VBFS362F**	—	—	15	30	15	50	30 ③
100	600	**VBFS363F**	—	—	50	60	30	75	50 ③
200	600	**VBFS364F**	—	—	100	125	60	150	50
Non-fusible Flange Mounted Switches – 3-Pole⑥⑩									
30	600	**VBNFS361F**	—	10	—	20	—	30	15 ③
60	600	**VBNFS362F**	—	20	—	50	—	60	30 ③
100	600	**VBNFS363F**	—	40	—	75	—	100	50 ③
200	600	**VBNFS364F**	—	60	—	125	—	150	50

Note: Fusible switches include fuse provisions for Class H Fuses. The load base can be moved to pre-drilled holes for Class J Fuses on all 600V switches. If Class R Fuses are required, add a Class R Fuse Clip Kit.

Switches—for Photovoltaic Applications, 600VDC Max.⑦

(for use in negative ground systems only)

Switch Ampere Rating	Catalog Number	Rated Isc per NEC Article 690
Fusible Panel Mounted Variable Depth Switches—3 Pole⑤⑧		
30	**VBFS361PV**	19.2A
60	**VBFS362PV**	38.4A
100	**VBFS363PV**	64.0A
Non-Fusible Panel Mounted Variable Depth Switches—3 Pole⑤		
30	**VBNFS361PV**	24.0A
60	**VBNFS362PV**	48.0A
100	**VBNFS363PV**	80.0A
Fusible Flange Mounted Variable Depth Switches—3 Pole (Includes Type 1, 3R and 12 Rated Operating Handle)⑥⑧		
30	**VBFS361FPV**	19.2A
60	**VBFS362FPV**	38.4A
100	**VBFS363FPV**	64.0A
Non-Fusible Flange Mounted Variable Depth Switches—3 Pole (Includes Type 1, 3R and 12 Rated Operating Handle)⑥		
30	**VBNFS361FPV**	24.0A
60	**VBNFS362FPV**	48.0A
100	**VBNFS363FPV**	80.0A

① Rated 5 HP at 250V DC.
② Rated 10 HP at 250V DC.
③ 600V DC & 600V DC horsepower rating shown requires (2) poles to be connected in series.
④ Std. - applies when non-time delay fuses are used. Max. - applies when time delay fuses are used.
⑤ Includes line base, load base, operating mechanism and line and load lugs. Order operating handle and linkage kits from tables on pages 18/99 or 18/100.
⑥ Includes line base, load base, operating mechanism line and load lugs plastic operating handle and required linkage.
⑦ All photovoltaic switches are rated to be used with 3 separate 600V DC circuits.
⑧ Fusible switches accept Class K or R fuses as standard and Class J fuses by relocating the load base.
⑨ Rated 250V DC max and 50HP at 250V DC.
⑩ Please add letter "M" to the end of catalog number for metal handle.

Cable Kit

For use with 30-200A panel mounted switches and Max-Flex handle and adapter kit.

Catalog Number	Description
FHOEC036	36" long drive cable
FHOEC048	48" long drive cable

Max-Flex™ Handle and Adapter Kit

(Type 1, 12, 3R & 4X) Use with 30-200A panel mounted switches and cable kit.

Catalog Number	Operating Handle Description
Plastic Handles	
VBHM1	30-200A Type 1, 3R, 12 and 4X
Metal Handles	
VBHM2	30-200A Type 1, 3R and 12
VBHM2X	30-200A Type 4X

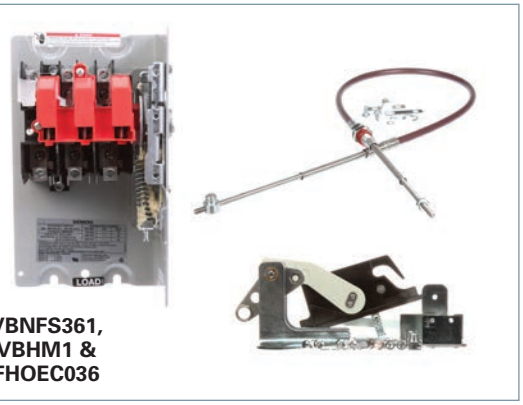

VBNFS361, VBHM1 & FHOEC036

Type VBII (30-600A) with Flange Mounted Operating Handle

Selection & Accessories

Flange Mounted Operating Handles

For use with Panel Mounted Switches. Plastic handle is included with Flange Mounted Switches as standard.

Catalog Number	Operating Handle Description
Plastic Handles	
VBH1	30-200A Type 1, 3R & 12
VBH14X	30-200A Type 4X
Metal Handles	
VBH112	30-200A Type 1, 3R & 12
VBH14	30-200A Type 4X
VBH2	400A Type 1 & 12
VBH2R	400 & 600A Type 1, 3R & 12
VBH24X	400 & 600A Type 4X



HR612

Class R Fuse Clip Kits

These kits prevent the installation of Class H and K fuses (one kit required per switch).

Class R Fuse Clip Kits

Catalog Number	Description
HR21	30A, 240V Kit (HD only)
HR612	30A, 600V Kit/60A, 240V Kit
HR62	60A, 600V Kit
HR63	100A Kit
HR64	200A Kit
HR656	400A/600A Kit

Internal Door Latch Kits

For use with enclosures with door mounted latching bar. Required when a flange mounted switch is mounted in a Hoffmann or Rittal enclosure provided with an AB cutout.

Catalog Number	Description
DKR2	2 point (for use with enclosures less than 40" high)
DKR3	3 point (for use with enclosures 40" or larger in height)

Rigid Linkage Kits

For use with Panel Mounted Switches. Not required for Flange Mounted Switches.

Catalog Number	Switch Ampere Rating	Enclosure Depth① Min	Enclosure Depth① Max.
VBLK1	30-200	6.94②	6.94②
VBLK2	30-200	6.94②	19.0
VBLK3	400 & 600	9.00	8.75
VBLK4	400 & 600	9.00	19.0



HT63

Class T Fuse Adapter Kits

100-600A fusible switches are field convertible to accept Class T fuses. 400-600A switches are field convertible to accept Class T fuses by moving the load base to a pre-drilled T fuse position.

Class T Fuse Adapter Kits③

Catalog Number	Description
HT23	100A, 240V Kit
HT63	100A, 600V Kit
HT24	200A, 240V Kit
HT64▲	200A, 600V Kit

Class J Fuse Provisions

All 30-600A, 600V fusible switches are field convertible to accept Class J fuses by moving the load base to a pre-drilled J fuse position.

Window Kits (Type 1, 12, 3R and 4x)

Allows viewing of visible blades and of indicating fuses through 200A.

Catalog Number	Description
VBWK1	30A Window Kit
VBWK2	60 & 100A Window Kit
VBWK3	200-600A Window Kit

NEW Quick Connects

They provide two point control power take-off capability and are normally used on two poles on the line side when it is required to have control power available when the switch is in the OFF position. They provide a mounting provision for standard ¼" quick connect terminal. Installed in the line or load side. 30A VBII switches have lugs UL listed to accept (2) wires per pole as standard so a 30A kit is not required.

Catalog Number	Description
HCQ62	60A 2 wire quick connect kit
HCQ63	100A 2 wire quick connect kit
HCQ64	200A 2 wire quick connect kit



HN612

Neutral Kits④

Standard Neutral Kits can be field installed in 30-100A switches.

Neutral Kits

Switch Ampere Rating	Kit Catalog Number
30A 600V, 60A 240V	HN612
60A, 600V & 100A	HN623

200% Neutral Kits④

UL listed 200% Neutrals are available on 60 & 100A switches. They are typically used with non-linear transformers or where increased neutral ampacity/lug capacity is required.

200% Neutral Kits

Switch Ampere Rating	Kit Catalog Number	Wire Range Line & Load Lugs (Cu/Al)
60 & 100A	HN263	(2) #14-1/0 AWG

▲ Built to order. Allow 6–8 weeks for delivery.
① Dimensions (min. & max.) from enclosure mounting pan to outside surface of enclosure handle mounting flange.
② 7.12 for 200A switches.
③ One kit per pole required.
④ UL approved (not CSA certified).



HA161234



HA261234



HP61



HLC612

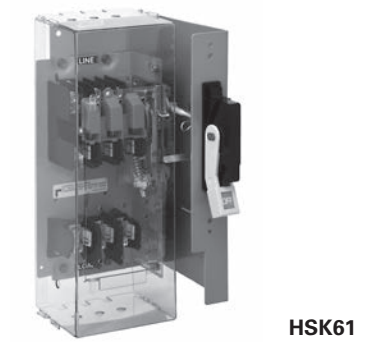

HSK61

Auxiliary Contacts

The auxiliary contacts are available in 1 normally open and 1 normally closed or 2 normally open and 2 normally closed configurations. Siemens offers a PLC Auxiliary Switch (30-200A) that has very low resistance for low voltage and current typical in PLC circuits. All auxiliary contacts make after and break before main switch contacts.

Switch Ampere Rating	Aux. Switch Catalog Number	Kit Ampere Rating			Kit Horsepower Rating		
		125V AC Max.	250V AC Max.	28V DC Max.	125V AC Max.	250V AC Max.	28V DC Max.
With 1 NO & 1 NC Isolated Contacts							
30-200	**HA161234**	10	10	—	1/2	3/4	—
400-600	**HA165678**	10	10	—	1/2	3/4	—
With 2 NO & 2 NC Isolated Contacts							
30-200	**HA261234**	10	10	7	1/2	3/4	—
400-600	**HA265678**	10	10	7	1/2	3/4	—
Low Current PLC Type with 1 NO & 1 NC Gold Plated Contacts							
30-200	**HA361234**	10	10	—	1/2	3/4	—
400-600	**HA365678**	10	10	—	1/2	3/4	—

Fuse Puller Kits

Fuse Puller Kits are field installable in 30-100A Type VBII Heavy Duty Switches (one kit required per 3-pole switch).

Switch Ampere Rating	Fuse Puller Kit Catalog Number
30	**HP61**
60	**HP62▲**
100	**HP63▲**

Copper Lug Kits

All switches are UL approved to accept field installed copper lug kits.

Switch Ampere Rating	Copper Lug Catalog Number	Description
30–60	**HLC612**	(9) Lugs/Kit #14-4 AWG Cu
100	**HLC63▲**	(9) Lugs/Kit #14-1/0 AWG Cu
200	**HLC64▲**	(9) Lugs/Kit #6 AWG-300 Kcmil Cu
400–600A	**HLC65678**	(1) Lugs/Kit #1/0 AWG-600 Kcmil Cu

Equipment Ground Kits

Equipment Ground Lug Kits are available for all switches.

Switch Ampere Rating	Catalog Number	Number of Terminals	Wire Range Per Terminal (Cu/Al)
30–200	**HG61234**	2	#14-4 AWG
400 & 600	**HG656**	4	#6 AWG-250 Kcmil

NEW Internal Shield Kits (for fusible switches)

Kits provide a "skirt" that encloses the VBII switch and also a clear plastic inner door to prevent accidental contact with live parts. Test probe holes are provided and fuses can be replaced without removal of kit.

Switch Ampere Rating	Shield Kit Catalog Number
30A	**HSK61**
60-100A	**HSK623**
200A	**HSK64**

▲ Built to order. Allow 6–8 weeks for delivery.

Lugs

30 & 60A switches are suitable for use with 60° or 75°C wire. 100–600A switches are suitable for use with 75°C rated wire. All switches are supplied with factory installed line and load lugs.

Wire Ranges (Line, Load and Standard Neutral)

Switch Ampere Rating	UL Approved Wire Range	Lug Wire Range
30	#14-6 AWG (Cu/Al)	#14-2 AWG (Cu/Al)
60	#14-2 AWG (Cu/Al)	#14-2 AWG (Cu/Al)
100	#14-1/0 AWG (Cu/Al)	#14-1/0 AWG (Cu/Al)
200	#6 AWG-300 Kcmil (Cu/Al)	#6 AWG-300 Kcmil (Cu/Al)
400	1/0 AWG-750 Kcmil (Cu/Al) or (2) 1/0 AWG-250 Kcmil (Cu/Al)	(1) 1/0 AWG-750 Kcmil (Cu/Al) or (2) 1/0 AWG-250 Kcmil (Cu/Al)
600	(2) 1/0 AWG-750 Kcmil (Cu/Al) or (4) 1/0 -250 Kcmil (Cu/Al)	(2) 1/0 AWG-750 Kcmil (Cu/Al) or (4) 1/0 AWG-250 Kcmil (Cu/Al)

Approximate Dimensions

Mounting bracket shown with handle installed is supplied with Flange Mounted Switches only. All Panel Mounted Switches have a "L" shaped mounting pan with a line base, load base (if fusible) and mechanism installed.

	Dimensions				
Catalog Number	A	B	C①	D (min)	D (max)
Fusible, Panel Mounted					
VBFS321	11.88	N/A	7.47	6.94	19
VBFS322	13.12	N/A	8.50	6.94	19
VBFS361, VBFS361PV	11.88	N/A	7.47	6.94	19
VBFS362, VBFS362PV	13.12	N/A	8.50	6.94	19
VBFS363, VBFS363PV	13.12	N/A	8.50	6.94	19
VBFS364	17	N/A	12.33	7.12	19
VBFS365	26.25	N/A	16.50	8.63	19
VBFS366	26.25	N/A	16.50	8.63	19
Non-fusible, Panel Mounted					
VBNFS361, VBNFS361PV	9.79	N/A	7.47	6.94	19
VBNFS362, VBNFS362PV	9.79	N/A	8.50	6.94	19
VBNFS363, VBNFS363PV	9.79	N/A	8.50	6.94	19
VBNFS364	10.77	N/A	12.33	7.12	19
VBNFS365	13	N/A	16.50	8.63	19
VBNFS366	13	N/A	16.50	8.63	19
Fusible, Flange Mounted					
VBFS321F	11.88	14.08	7.47	7.27	N/A
VBFS322F	13.12	15.83	8.85	7.27	N/A
VBFS361F, VBFS361FPV	11.88	14.08	7.47	7.27	N/A
VBFS362F, VBFS362FPV	13.12	15.83	8.85	7.27	N/A
VBFS363F, VBFS363FPV	13.12	15.83	8.85	7.27	N/A
VBFS364F	17	18.20	12.68	7.57	N/A
Non-fusible, Flange Mounted					
VBNFS361F, VBNFS361FPV	9.79	11.78	7.47	7.27	N/A
VBNFS362F, VBNFS362FPV	9.79	11.78	8.85	7.27	N/A
VBNFS363F, VBNFS363FPV	9.79	11.78	8.85	7.27	N/A
VBNFS364F	10.77	11.97	12.68	7.57	N/A

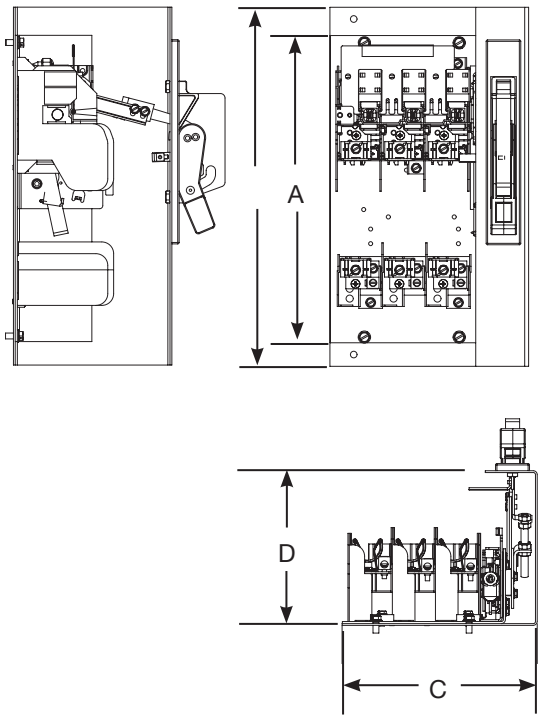

① Dimension C for panel mounted switches indicates the minimum width from the left hand edge of the switch mounting pan to the right hand inside surface of the enclosure.

Type MCS (30-200A) — Switches, Fuse and No Fuse Kits

Selection

Features

- 30, 60, 100 and 200 Ampere Switches
- UL Recognized (file # E121152 vol. 1 & 2) and CSA Certified
- Simple Mounting — with an integral switch and over center mechanism
- Horsepower & load break rated
- Compact Size
- Visible Blade Contacts
- Rugged Construction — with a short circuit current rating of 10,000 amps with Class H or 200,000 amps at 600V maximum AC, when fused with Class R or Class J fuses
- Available with three operator handle options, allowing flexible placement of switch
- Field Installable Auxiliary Contacts
- Flexible Fuse Class Configurations
- Flange mounted handles meet NFPA79 requirements

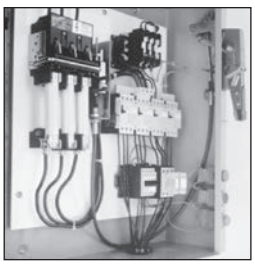

Type MCS Disconnect Switch with Max-Flex™ handle operator



Type MCS Disconnect Switch with fixed-depth, flange-mounted handle

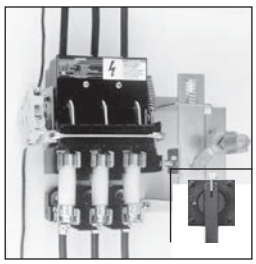

Type MCS Disconnect Switch with rotary handle

Ordering Information

1. Select the basic switch size you need (30, 60, 100 or 200 ampere).
2. Check the switch selected against the maximum horsepower rating required for our application. "L" or "R" suffix on switch catalog numbers denotes left or right-handed mechanism drive.
3. Choose either fuse or no fuse kit from chart below.
4. Check "Minimum Dimensions" on page 18/104 for installation space requirements.
5. Select from the list of handle operators, the type which best suits your application. Handle operators can be selected from the next page.

Basic Switches

Switch Ampere Rating	Maximum Voltage Rating	Catalog Number Right Hand	Catalog Number Left Hand	Maximum Horsepower Rating, 3 Phase④						250 Volts DC (max)④
				240 Volts AC		480 Volts AC		600 Volts AC		
				Standard Fuse	Time Delay Fuse	Standard Fuse	Time Delay Fuse	Standard Fuse	Time Delay Fuse	
30	600	**MCS603R**	**MCS603L**	3	7½	5	15	7½	20	5
60	600	**MCS606R**	**MCS606L**	7½	15	15	30	15	50	10
100	600	**MCS610R**	**MCS610L▲**	15	30	25	60	30	75	20
200	600	**MCS620R**	**MCS620L▲**	25	60	50	125	60	150	40

Fuse And No Fuse Kits (Includes load base plus line and load fuse clips)①

Basic Switch Ampere Rating	Switch Catalog Number	Kit Description	No Fuse Kits		For Class H	For Class J	For Class R	Lug Wire Size
			Standard	Cu Only②				
			Catalog Number	Catalog Number	Catalog Number ①	Catalog Number ①	Catalog Number ①	
30	**MCS603R** or **MCS603L**	No Fuse	**TMK606**	—	—	—	—	#14 to #4 AWG Cu/Al
		30A, 250V	—	—	**FCK203▲**	—	**FCRK203**	
		30A, 600V	—	—	**FCK206**	**FCJK603**	**FCRK206**	
		60A, 250V	—	—	**FCK206**	—	**FCRK206**	
		60A, 600V	—	—	**FCK606**	**FCJK606**	**FCRK606**	
60	**MCS606R** or **MCS606L**	No Fuse	**TMK606**	—	—	—	—	#14 to #4 AWG Cu/Al
		60A, 250V	—	—	**FCK206**	—	**FCRK206**	
		60A, 600V	—	—	**FCK606**	**FCJK606**	**FCRK606**	
		100A, 250V	—	—	**OFCK661▲**	**OFCK661▲**	③	
		100A, 600V	—	—	**OFCK661▲**	**OFCK661▲**	③	
100	**MCS610R** or **MCS610L**	No Fuse	**TMK610**	**TMK610C**	—	—	—	#14 to #2/0 AWG Cu/Al
		100A, 250V	—	—	**FCK610**	**FCK610**	③	
		100A, 600V	—	—	**FCK610**	**FCK610**	③	
		200A, 250V	—	—	**OFCK620**	**OFCK620**	③	
		200A, 600V	—	—	**OFCK620**	**OFCK620**	③	
200	**MCS620R** or **MCS620L**	No Fuse	**TMK620**	**TMK620C▲**	—	—	—	#6 to 300 kcmil Cu/Al
		200A, 250V	—	—	**FCK620**	**FCK620**	③	
		200A, 600V	—	—	**FCK620**	**FCK620**	③	

▲ Built to order. Allow 6–8 weeks for delivery.
① For "copper only" connectors, order as follows:
Fusible—order standard switch, standard fuse kit and copper only no fuse kit.
Non-Fusible—order standard switch and copper only no fuse kit.
② Includes both line and load lugs.
③ For Class R fuses order Class H kit from this table and the Class R conversion kit from the next page.
④ HP ratings for time delay fuses and for 250V DC also apply to Non-fusible switches.

Auxiliary Switch Kits

Switch Catalog Number	Contact Arrangement	
	1 NO/1 NC Catalog Number	2 NO/2 NC Catalog Number
MCS603R	MCSAKR136	MCSAKR236
MCS603L	MCSAKL136	MCSAKL236▲
MCS606R	MCSAKR136	MCSAKR236
MCS606L	MCSAKL136	MCSAKL236▲
MCS610R	MCSAK116	MCSAK216
MCS610L	MCSAK116	MCSAK216
MCS620R	MCSAK126	MCSAK226
MCS620L	MCSAK126	MCSAK226

Class R Fuse Conversion Kits

Fuse Clip Rating	Catalog Number
100A, 600V	SSRK33
200A, 600V	SSRK34

Fuse Ejector Kits

Switch Catalog Number	Fuse Ejector Kit Catalog Number
MCS610	FE100▲
MCS620	FE200▲

Handle Operators

Fixed Depth, Flange Mounted, Types 1, 3, 3R, 12①⑥

Switch Catalog Number	Complete Handle Mechanism Catalog Number	Handle Only Catalog Number	Switch Operator Only Catalog Number
MCS603R	FDFS06R	FDH10	FDS06R
MCS603L	FDFS06L	FDH10	FDS06L
MCS606R	FDFS06R	FDH10	FDS06R
MCS606L	FDFS06L	FDH10	FDS06L
MCS610R	FDFS06R	FDH10	FDS06R
MCS610L	FDFS06L	FDH10	FDS06L
MCS620R	FDFS20R	FDH20	FDS20R
MCS620L	FDFS20L	FDH20	FDS20L

Variable Depth, Flange Mounted Max-Flex™, Types 1, 3, 3R, 12②

Switch Catalog Number	Complete Handle Mechanism Catalog Number	Handle Only Catalog Number	Switch Operator Only Catalog Number	Cable Only③ Catalog Number
MCS603R	FHOS06036R	FHOHS	FHOS06R	FHOEC036
MCS603L	FHOS06036L	FHOHS	FHOS06L	FHOEC036
MCS606R	FHOS06036R	FHOHS	FHOS06R	FHOEC036
MCS606L	FHOS06036L	FHOHS	FHOS06L	FHOEC036
MCS610R	FHOS06036R	FHOHS	FHOS06R	FHOEC036
MCS610L	FHOS06036L	FHOHS	FHOS06L	FHOEC036
MCS620R	FHOS20036R	FHOHS	FHOS20R	FHOJC036
MCS620L	FHOS20036L	FHOHS	FHOS20L	FHOJC036

Variable Depth Rotary, Through-The-Door-Mounted, Types 1, 12④⑤

Variable Depth				Shaft Only Variable Depth
MCS603R	CRHOS06VD	CRHOH	RHOS06	RHOSVD
MCS606R	CRHOS06VD	CRHOH	RHOS06	RHOSVD
MCS610R	CRHOS06VD	CRHOH	RHOS06	RHOSVD
MCS620R	CRHOS20VD	RHOH	RHOS20	RHOSVD

MCS Disconnect Switch Panel Space Requirements

Panel Space Requirements

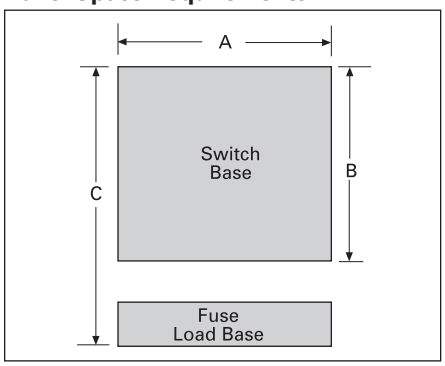

Minimum Dimensions (inches*)

Switch Catalog Number	Size	"A"	"B"	"C"	Fuse Class
MCS603	30A/240V	6.13	5.52	8.11	H, K, R
	30A/600V	6.13	5.52	10.11	H, K, R
	30A/600V	6.13	5.52	8.48	J
MCS606	60A/240V	6.13	5.52	7.86	H, K, R
	60A/600V	6.13	5.52	10.38	H, K, R
	60A/600V	6.13	5.52	8.35	J
MCS610	100A/240V	7.38	7.59	11.85	H, K, R
	100A/600V	7.38	7.59	13.85	H, K, R
	100A/600V	7.38	7.59	10.6	J
MCS620	200A/240V	9.17	9.00	14.7	H, K, R
	200A/600V	9.17	9.00	17.2	H, K, R
	200A/600V	9.17	9.00	13.32	J

"A" – Dimension is measured from each cross bail pin.

"B" – Dimension is measured from line side barrier to load side barrier.

"C" – Dimension is measured from line side terminal of switch to load side terminal of fuse load base.

▲ Built to order. Allow 6–8 weeks for delivery.

①For Type 4 and 4X applications, order handle only Catalog Number
100A - **FDH104** 200A - **FDH204**

②For Type 4 and 4X applications, order handle only Catalog Number **FHOHS4**

③Standard cable length is 36 inches. Alternate lengths are available as follows:

Length	Amps	Cat. No.
48"	30–100	**FHOEC048**
60"	30–100	**FHOEC060**
48"	200	**FHOJC048**
60"	200	**FHOJC060**

④For Type 4 and 4X applications, order handle only Catalog Number **RHOH4**

⑤For Type 3 and 3R applications, order handle only Catalog Number **RHOH**

⑥Min. enclosure depth from mounting pan to handle mounting surfaces: 30-100A 6.44 Inches
200A 10.93 Inches

*For millimeters multiply inches by 25.4.

Type CFS Compact Fusible Switches

Description

Siemens Type CFS compact fusible switches meet UL 98 requirements and can be used in either service entrance or branch circuit applications. 30-800A, 3 pole switches are offered and are all rated 600V AC maximum. 30A switches are available with provisions for either Class CC or J fuses. 60A and larger switches provided with Class J fuse provisions can be used in non-fusible applications with field installable no-fuse kits.

All are open style, designed to be panel mounted and are UL listed under file number #E121152 or #E68312 and CSA certified under file number #222227. A variety of door mounted rotary operators are available with Type 1, 3R, 12 or 4/4X ratings.

NFPA79 Kits

CFSNFPA1 AND CFSNFPA2N kits provide an internal handle and padlocking means to comply with article 5.3.4.2 of the NFPA-2002 standard.

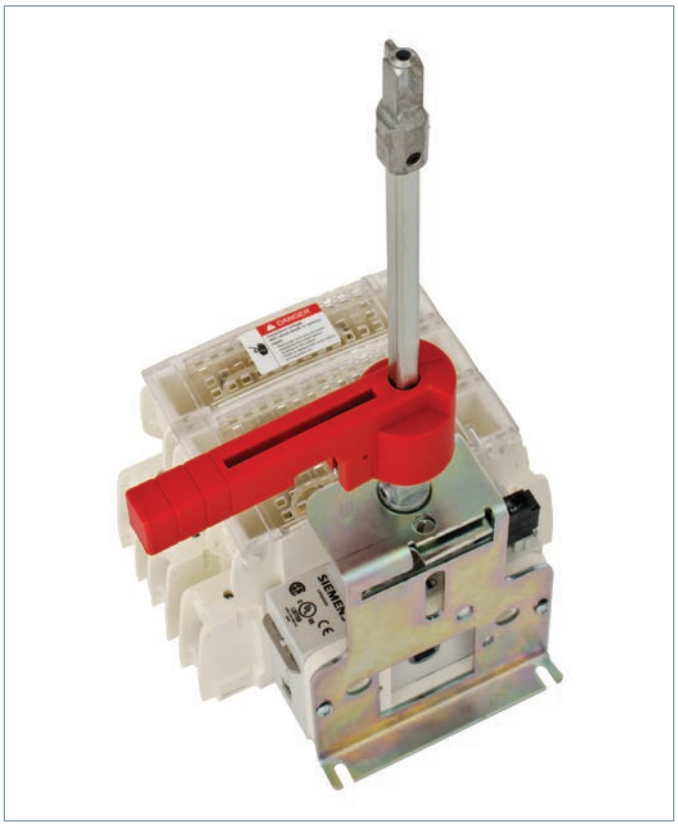

Catalog Numbering System

CFS Switches
Compact Fusible Switch

CFS	3	6	1	J	5	N

- Number of poles 3 = 3
- Max. Voltage Rating 6 = 600V
- Ampere rating
  - 1 = 30A
  - 2 = 60A
  - 3 = 100A
  - 4 = 200A
  - 5 = 400A
  - 6 = 600A
  - 7 = 800A
- Fuse provisions type
  - C = Class CC
  - J = Class J with right hand mechanism
  - JL = Class J with left hand mechanism
  - L = Class L with right hand mechanism
- Max. AIC rating
  - 5 = 100kA
  - Omit = 200kA J fused
- Version
  - N = New size reduced version
  - N1 = New 100kA 60A switch

Operating Handles
CFS type handle

CFSH	10	R	12	N

- Shaft cross section
  - 5 = 5 mm
  - 10 = 10 mm
  - 12 = 12 mm
- Handle color and length
  - B = Black & blue, short
  - R = Red & yellow, short
  - BL = Black & blue, long
  - RL = Red & yellow, long
- NEMA type
  - 12 = 1, 3R and 12
  - 4 = 1, 3R, 12 and 4/4X
- Version
  - N = New version

CFS Operating Shafts
CFS type shaft

CFSS	10	200	H	N

- Shaft cross section
  - 5 = 5 mm
  - 10 = 10 mm
  - 12 = 12 mm
- Shaft length
  - 200 = 200 mm
  - 400 = 400 mm
- Switch compatibility
  - Omit = 30A, 100kA
  - H = 100 or 200 kA
- Version
  - N = New version

Type CFS Compact Fusible Switches

Features and Ordering Information

Features

- 30 - 800A ratings
- UL Listed under file #E121152 & CSA Certified under file #222227
- Door mounted rotary handles with defeatable cover interlock
- Meets UL requirements for both main and branch circuit applications
- Compact size
- 100kA with Class CC fuses or up to 200kA with Class J fuses
- Load break and horsepower rated
- Quick make and break operation
- All handles are padlockable with up to (3) padlocks with 5/16" hasps in the OFF position
- Catalog numbers CFS361C5 & CFS361J5 can be DIN-rail mounted and can be either front or side operated with standard rotary handles..
- All CFS part numbers ending in N can be either front or side operated with standard rotary handles.
- Handles are available in Type 1, 3R, 4/4X & 12 ratings
- NFPA 79 field installed kits are available
- 30-400A, 200kA switches are provided with quick connect terminal provisions for voltage sensing or for 10A max. control circuits

Switch



CFS363JN
with (2) **CFSAUX1NO**

Shaft



CFSS10200HN

Handle



CFSH10BL12N

Lugs/Accessories



CFSL200

Ordering information

1. Select the panel mounted switch required based on Ampere, HP and AIC requirements. Switches with a right hand mechanism are standard, 30-100A switches with a left hand mechanism are available.
2. Select handle based on environmental rating required.
3. Select operating shaft (200 or 400mm in length). For enclosure depths of 9.0" or less from panel mounting surface to inside of door use 200mm long shafts. For deeper enclosures use 400mm long shafts. 30A 100kA switches can be used in 10" deep enclosures (panel to inside of door) with 200mm shaft and CFSH5N handles.

Note: Be sure to check shaft and handle compatibility with the switch selected by using information provided in the selection tables.

4. Line & load lugs are provided as standard on 30-100A switches. Terminal kits are available for 200-800A switches if needed.
5. Auxiliary contact are available if needed as follows. 30A switch CFS361J5 will accept up to (2) aux contacts without an aux contact holder. If more than (2) aux contacts are required order aux contacts PLUS aux contact holder kit CFSAUXH1. All other switches will accept up to (4) aux contacts.
6. 30-100A switches are designed to prevent inadvertent contact with live parts and shields are not required. 200 & 400A switches are not supplied with terminal shields. They are available as field installed kits for both line and load terminals. 400-800A switches are supplied as standard with line shields and terminal shroud kits are available for the load side.

Fusible switches, 3-pole 600V AC Max. 30-100A & 600-800A switches are also rated 250V DC Max when poles are field connected in series[5]

Switch Ampere Rating	Catalog Number	Fuse Provisions Provided	Max Horsepower Ratings 240V 3Ø AC	480V 3Ø AC	600V 3Ø AC	250V DC	AC Short Circuit Rating
Standard – With Right Hand Mounted Mechanism							
30[1]	**CFS361C5**	Class CC	7.5	15	20	5[3]	100kA
30[1]	**CFS361J5**	Class J	7.5	15	20	5[3]	100kA
30[1]	**CFS361JN**	Class J	7.5	15	20	5[3]	200kA
60[1]	**CFS362JN1**	Class J	15	30	50	10[3]	100kA
60[1]	**CFS362JN**		15	30	50	10[3]	
100[1]	**CFS363JN**		30	60	75	20[3]	
200[2]	**CFS364JN**[4]	Class J	60	125	150	—	200kA
400[2]	**CFS365JN**[4]		125	250	350	—	
600[2]	**CFS366J**[8][9]		200	400	500	—	
800[2]	**CFS367L**[8][9]	Class L	200	400	500	—	200kA
Optional – With Left Hand Mounted Mechanism[4]							
30[1]	**CFS361JLN**	Class J	7.5	15	20	5[3]	200kA
60[1]	**CFS362JLN**		15	30	50	10[3]	
100[1]	**CFS363JLN**		30	60	75	20[3]	



CFS361J5

Operating Shafts for 30-400A Switches[5]

Catalog number	Shaft length in. (mm)	Switch & handle compatibility
CFSS5200N	7.9 (200)	5mm x 5mm for use with CFS361C5 & CFS361J5 switches & with "CFSH5" handles only
CFSS5400N	15.7 (400)	
CFSS5200HN	7.9 (200)	5mm x 5mm for use with all "CFSH10" handles & with CFS361C5 & CFS361J5 switches only
CFSS5400HN	15.7 (400)	
CFSS10200HN	7.9 (200)	10mm x 10mm for use with all "CFSH10" handles & with all 30-400A switches except CFS361C5 & CFS361J5
CFSS10400HN	15.7 (400)	



CFSS5400N

Compact rotary operating handles — door mounted (for use with CFS361C5 & CFS361J5 switches only)[6]

Catalog number	Color	UL Type	Operating shaft compatibility
CFSH5B12N **CFSH5R12N**	Blue & Black Yellow & Red	1, 3R & 12	CFSS5200N or CFSS5400N
CFSH5B4N **CFSH5R4N**	Blue & Black Yellow & Red	1, 3R, 12 & 4/4X	



CFSH5B12N

Rotary Operating Handles - Door Mounted (for use with CFSS5200HN, CFSS5400HN, CFSS10200HN & CFSS10400HN)

Catalog number	Color	Description
Type 1, 3R & 12[7]		
CFSH10B12N	Blue & Black	Heavy duty pistol grip (2.75" long for use with 30A switches & CFS362JN1)
CFSH10R12N	Yellow & Red	
CFSH10BL12N	Blue & Black	Heavy duty pistol grip (4.92" long for 30-400A switches)
CFSH10RL12N	Yellow & Red	
Type 1, 3R, 4/4X & 12[7]		
CFSH10B4N	Blue & Black	Heavy duty pistol grip (2.75" long for use with 30A switches & CFS362JN1)
CFSH10R4N	Yellow & Red	
CFSH10BL4N	Blue & Black	Heavy duty pistol grip (4.92" long for 30-400A switches)
CFSH10RL4N	Yellow & Red	

[1] Line and load lugs included.
[2] Line and load lugs are not included. Order from table on next page if required.
[3] DC HP rating shown requires (3) poles to be connected in series.
[4] **CFS364JN** & **CFS365JN** can be rotated 180º for left hand operation as standard.
[5] Catalog numbers **CFS361C5** & **CFS361J5** accept 5mm x 5mm operating shafts. All other 30-400A switches accept 10mm x 10mm operating shafts.
[6] Compact pistol grip design (2.75" long) with defeatable cover interlock. Cover can be opened when handle is padlocked in the OFF position.
[7] Defeatable cover interlock provided. Cover cannot be opened when handle is padlocked in the OFF position.
[8] 4 pole 600 & 800A switches, **CFS466J** & **CFS467L** are also available.
[9] **CFS366J** and **CFS367L** are rated 250 & 600V DC when (2) poles are connected in series.

600 & 800A Rotary Operating Handles - Door Mounted (8.27" long)⑦

Catalog number	Color	UL Type
CFSH12BL12	Blue & Black	1, 3R & 12
CFSH12RL12	Yellow & Red	1, 3R & 12
CFSH12BL4	Blue & Black	1, 3R, 12 & 4/4X
CFSH12RL4	Yellow & Red	1, 3R, 12 & 4/4X

600 & 800A Operating Shafts (Cross Section 12mm x 12mm)

Catalog number	Shaft length in. (mm)	Enclosure depth (switch mounting surface to door OD)
CFSS12200H	12.59 (320)	10.43 – 16.68 in.
CFSS12400H	15.75 (400)	10.43 – 19.84 in.



CFSL200 & 400

Type CFS Fusible Switch Accessories

Catalog number	Description
Terminals①	
CFSL200	200A lug kit (6 lugs per kit) #6-3/0
CFSL400N	400A lug kit (6 lugs per kit) #2-600kcmil (for CFS365JN only)
CNFSL400D	400A lug kit (6 lugs per kit, 2 wires per lug) #6-350kcmil
CFSL400	600-800A lug kit (6 lugs per kit, 2 wires per lug) #2-600kcmil⑨
Shorting bars (no fuse kits)	
CFSSB60	60A shorting bar kit (3 links per kit)
CFSSB100	100A shorting bar kit (3 links per kit)
CFSSB200	200A shorting bar kit (3 links per kit)
CFSSB400	400A shorting bar kit (3 links per kit)
CFSSB680	600 & 800A shorting bar kit (1 link per kit)
Auxiliary contacts (NEMA ratings AC A600 DC N600)	
CFSAUXH1②	Aux contact holder (CFS361C5 & CFS361J5)
CFSAUX1NO	Aux contact 1 NO (30-800A Sws)
CFSAUX1NC	Aux contact 1 NC (30-800A Sws)
CFS11AUX	1NO, 1NC aux contact kit (side mount for 200kA switches)
CFS22AUX	2NO, 2NC aux contact kit (side mount for 200kA switches)
Terminal shrouds (line or load)	
CFSTS200N⑧	200A shroud kit (line or load 3-pole kit)
CFSTS400N⑧	400A shroud kit (line or load 3-pole kit for CFS365JN only)
CFSTS680⑥	600/800A 3-pole shroud kit
CFSTS6804⑥	600/800A 4-pole shroud kit
30A compact switch kits	
CFSPLK	Shaft padlocking kit for 30A compact switch when door is opend
CFSH5CDM	Direct mount handle kit for CFS361C5
CFSH5JDM	Direct mount handle kit for CFS361J5



CFSAUX1NC



CFSSB100 – CFSSB400

NFPA 79 kits (if auxiliary contacts are needed, see table above)

Kits provide an operating shaft suitable for use with all heavy duty handles (not for use with CFSH5 handles).
Kits also provide an internal operating handle and an internal OFF padlocking provision.

CFSNFPA1④	For use with CFS361C5 & CFS361J5
CFSNFPA2N⑤	For use with CFS361JN, CFS361CN, CFS362JN1, CFS362JN, CFS363JN & CFS364JN
CFSNFPA3N⑤	For use with CFS365JN only

① Supplied as standard on 30-100A switches
② **CFS361C5** will accept (4) aux contacts without an aux contact holder. **CFS361J5** will accept (2) aux contacts without an aux contact holder.
③ Supplied as standard on all but 30A, 100kA compact switches.
④ 12.6 in. (320 mm) long operating shaft included
⑤ 12.7 in. (323 mm) long operating shaft included
⑥ Line side terminal shrouds supplied with switch
⑦ Defeatable cover interlock included. Cover cannot be opened when the handle is padlocked in the OFF position.
⑧ Neither line or load terminal shrouds are supplied as standard with new style 200 & 400A switches.
⑨ 2 kits needed for 800A, total 12 lugs to cover line and load sides

UL & CSA Technical Characteristics And Panel Space Requirements

Catalog Number	Amps	Fuse Class	Ac Short Circuit Rating	Electrical Endurance	Mechanical Endurance	Panel Space Requirements - in. (mm)		
						Height	Width	Depth①
CFS361C5	30	CC	100kA	6000	10000	4.56 (116)	3.78 (96)	6.00 (152)
CFS361J5	30	J	100kA	6000	10000	4.56 (116)	4.15 (105)	6.00 (152)
CFS361JN	30	J	200kA	6000	10000	5.35 (136)	5.89 (150)	6.00 (152)
CFS361JLN	30	J	200kA	6000	10000	5.35 (136)	5.89 (150)	6.00 (152)
CFS362JN1	60	J	100kA	6000	10000	5.35 (136)	5.89 (150)	6.00 (152)
CFS362JN	60	J	200kA	6000	10000	7.32 (186)	5.89 (150)	6.00 (152)
CFS362JLN	60	J	200kA	6000	10000	7.32 (186)	5.89 (150)	6.00 (152)
CFS363JN	100	J	200kA	6000	10000	7.32 (186)	5.89 (150)	6.00 (152)
CFS363JLN	100	J	200kA	6000	10000	7.32 (186)	5.89 (150)	6.00 (152)
CFS364JN	200	J	200kA	6000	8000	11.46 (291)	7.72 (196)	6.00 (152)
CFS365JN	400	J	200kA	1000	6000	15.35 (390)	10.19 (259)	8.00 (203)
CFS366J	600	J	200kA	1000	5000	11.81 (300)	14.33 (364)	11.00 (280)
CFS466J	600	J	200kA	1000	5000	11.81 (300)	18.03 (458)	11.00 (280)
CFS367L	800	L	200kA	500	3500	11.81 (300)	14.33 (364)	11.00 (280)
CFS467L	800	L	200kA	500	3500	11.81 (300)	18.03 (458)	11.00 (280)

Wire Ranges Line & Load Lugs

Switch	Amperage Rating	UL Approved Wire Size (75º C)
CFS361J5	30	(1)#14-10
CFS361C5	30	(1)#14-10
CFS361JN	30	(1)#14-6
CFS362JN1	60	(1)#14-6
CFS362JN	60	(1)#12-1
CFS363JN	100	(1)#12-1
CFS364JN	200	(1)#3/0
CFS365JN	400	(1)600MCM
CFS366J	600	(2)350 MCM
CFS367L	800	(2)600 MCM

Auxiliary Contact Capability When An NFPA79 Kit Is Used

Switch	NFPA79 Kit	Aux Contacts That Can Be Installed
CFS361C5	**CFSNFPA1**	(2) Total, CFSAUX1NO or CFSAUX1NC
CFS361J5		(1) CFSAUX1NO or (1) CFSAUX1NC
CFS361JN **CFS362JN1** **CFS362JN** **CFS363JN** **CFS364JN**	**CFSNFPA2N**	(2) Total, CFSAUX1NO or CFSAUX1NC②
CFS365JN	**CFSNFPA3N**	(2) Total, CFSAUX1NO or CFSAUX1NC②

① Minimum dimensions from mounting surface to inside of cover. Dimensions shown can be decreased if aux contacts are not required.

② For additional auxiliary contacts use side mounted **CFS11AUX** or **CFS22AUX**.

Type CNFS Compact Non-Fusible Switches

Description

Siemens Type CNFS compact non-fusible switches meet UL 98 requirements and can be used in either service entrance or branch circuit applications. They are available in 30-800A, 3-pole switches and are all rated 600VAC maximum.

All are open style, designed to be panel mounted and are UL listed under file number #E121152 or #E68312 and CSA certified under file number #222227. A variety of door mounted rotary operators are available with Type 1, 3R, 12 or 4/4X ratings.

These non-fusible switches are UL listed under file #E201138 and CSA certified under file #112964. They also conform to IEC standard 60947-3.



Catalog Numbering System

CNFS Switches
Compact Non-Fusible Switch

CNFS	3	6	1	N

- Number of poles 3 = 3
- Max. Voltage Rating 6 = 600V
- Ampere rating
  - 1 = 30A
  - 2 = 60A
  - 3 = 100A
  - 4 = 200A
  - 5 = 400A
  - 6 = 600A
  - 7 = 800A
- Design type
  - N = Compact design

Type CNFS Compact Non-Fusible Switches

Features

- 30 - 800A ratings
- UL Listed under file #E201138 & CSA Certified under file #112964 or #703166
- Options to have door mounted pistol handles with defeatable cover interlock or direct mounted handles.
- Meets UL 98 requirements
- Compact size
- All short circuit protection ratings require the use of Class J fuses in the circuit.
- Load break and horsepower rated
- Quick make and break operation
- All external handles and direct handles for 600-800A switches are padlockable with up to (3) padlocks with 5/16" hasps in the OFF postition. Direct handles for 30-100A switches are padlockable with (1) padlock with 3/16" hasps in the OFF position.
- All switches are able to be panel mounted. Catalog numbers CNFS361N, CNFS362N, & CNFS363N can also be DIN-rail mounted and can either be front or side operated with standard pistol handles.
- Handles are available in Type 1, 3R, 4/4X & 12 ratings

Shaft



CFSS10200HN

Handle



CFSH10BL12N

Lugs/Accessories



CFSL200

Ordering information

1. Select the panel mounted switch required based on Ampere, HP and AIC requirements. Switches with a right hand mechanism are standard.
2. Select handle based on environmental rating required.
3. For door mounted handles, select operating shaft based on enclosure depth. For enclosure depths of 9.00" or less from panel mounting surface to inside of door use up to 200 mm long shafts. From 9.00" to 13.00" use up to 320 mm long shafts. For deeper enclosures use up to 400 mm long shafts. For direct mount handles, no shaft is needed.

Note: Be sure to check shaft and handle compatibility with the switch selected by using information provided in the selection tables.

4. Line & load lugs are provided as standard on 30-100A switches. Terminal kits are available for 200-800A switches if needed.
5. Auxiliary contacts are available if needed. Each switch will accept up to (2) aux contact modules, containing (2) contacts in each.
6. 30-100A Series N switches are designed to prevent inadvertent contact with live parts and shields are not required but are offered as terminal shrouds. 100-400A switches are not supplied with terminal shields. They are available as separate field installed kits for both line and load terminals by amperage rating. Line side terminal screens are provided for 600-800A switches.

Type CNFS compact non-fusible switches

Switch Ampere Rating	Catalog Number	Max Horsepower Ratings			Short Circuit Rating	
		240V 3Ø AC	480V 3Ø AC	600V 3Ø AC	@ 480VAC	@ 600VAC
30	**CNFS361N**①	10	20	25	100	100
60	**CNFS362N**①	20	40	50	100	100
100	**CNFS363N**①	20	50	50	100	25
200	**CNFS364N**②	75	150	200	200	200
400	**CNFS365N**②	125	250	350	200	200
600	**CNFS366N**②	200	400	350	200	200
800	**CNFS367N**②	200	500	500	100	100



CNFS363N

Direct mount rotary handles for compact non-fusible switches

Catalog Number	Color	Use with compact non-fusible switches
CNFSHD1	Blue	CNFS361N, CNFS362N, CNFS363N
CNFSHD2	Black	CNFS364N, CNFS365N
CNFSHD3	Black	CNFS366N, CNFS367N

Operating shafts for compact non-fusible switches

Catalog Number	Shaft length in. (mm)	Switch and handle compatibility
CNFSS52001	7.9 (200)	5mm x 5mm for use with CNFS361N, CNFS362N and CNFS363N switches and with "CNFSH5" handles only
CNFSS53201	12.6 (320)	
CNFSS54001	15.7 (400)	
CFSS10200HN	7.9 (200)	10mm x 10mm for use with "CFSH10" handles and with CNFS364N and CNFS365N switches only
CNFSS103202	12.6 (320)	
CFSS10400HN	15.7 (400)	
CNFSS152003	7.9 (200)	15mm x 15mm for use with "CFSH12" handles and with CNFS366N and CNFS367N switches only
CNFSS153203	12.6 (320)	
CNFSS154003	15.7 (400)	



CNFSS154003

Compact rotary operating handles for non-fusible switches – door mounted

Catalog Number	Color	UL Type	Operating shaft compatibility	Use with non-fusible compact switches
CNFSH5BP121	Black	NEMA 1, 3R, 12	CNFSS52001, CNFSS53201, CNFSS54001	CNFS361N, CNFS362N, CNFS363N
CNFSH5RP121	Red/Yellow	NEMA 1, 3R, 12		
CNFSH5BP41	Black	NEMA 4/4X		
CNFSH5RP41	Red/Yellow	NEMA 4/4X		
CFSH10BL12N	Black	NEMA 1, 3R, 12	CFSS10200HN, CNFSS103202, CFSS10400HN	CNFS364N, CNFS365N
CFSH10RL12N	Red/Yellow	NEMA 1, 3R, 12		
CFSH10BL4N	Black	NEMA 4/4X		
CFSH10RL4N	Red/Yellow	NEMA 4/4X		
CFSH12BL12	Black	NEMA 1, 3R, 12	CNFSS152003, CNFSS153203, CNFSS154003	CNFS366N, CNFS367N
CFSH12RL12	Red/Yellow	NEMA 1, 3R, 12		
CFSH12BL4	Black	NEMA 4/4X		
CFSH12RL4	Red/Yellow	NEMA 4/4X		



CFSH12RL12

① Line and load lugs are included.
② Line and load lugs are not included. Order from table on following pages if needed.
③ All switches can be rotated 180° for left hand operation as standard.
④ Flange mounting is not available for non-fusible switches.

Auxiliary contacts for use with non-fusible switches

Catalog Number	Number of Contacts	Use with Non-fusible Contact Switches
CNFS1AUX1	1 Normally Open + 1 Normally Closed	CNFS361N, CNFS362N, CNFS363N
CNFS2AUX1	2 Normally Closed	
CNFS1AUX2	1st Auxiliary Contact: 1 Normally Open + 1 Normally Closed	CNFS364N, CNFS365N, CNFS366N, CNFS367N
CNFS2AUX2	2nd Auxiliary Contact: 1 Normally Open + 1 Normally Closed	



CNFS1AUX1

Terminal shrouds for use with non-fusible switches

Catalog Number	Shroud Location	Use with Non-fusible Contact Switches
CNFSTS100	Top and Bottom	CNFS361N, CNFS362N, CNFS363N
CNFSTSC200T	Top	CNFS364N
CNFSTSC200B	Bottom	
CNFSTSC400T	Top	CNFS365N
CNFSTSC400B	Bottom	
CNFSTSC600B	Bottom	CNFS366N
CNFSTSC800B	Bottom	CNFS367N



CNFSTSC400T

Terminal lug kits for use with non-fusible switches

Catalog Number	Wire Sizes	Use with Non-fusible Contact Switches
Included	#10-2/0	CNFS361N, CNFS362N, CNFS363N
CFSL200	#6-300MCM	CNFS364N
CFSL400N	#2-600MCM	CNFS365N
CNFSL400D	#6-350MCM, 2 wires per lug	CNFS356N
CFSL400	#6-350MCM, 2 wires per lug	CNFS366N, CNFS367N①



CFSL200 & 400

① 2 kits needed for 800A, total 12 lugs to cover line and load sides.

Notes