

General Duty Switch

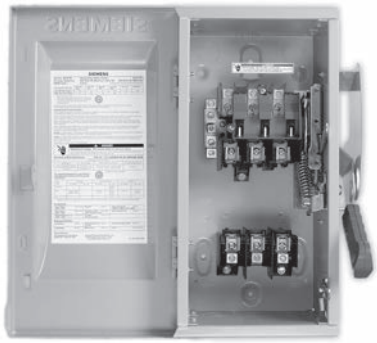

Heavy Duty Switch



Window Switch

Scan to connect online to the most up-to-date version of this Section of SPEEDFAX.

contents

Safety Switch Guide Form Specifications	4-2
Feature Comparison	4-3
Enclosure Types	4-4
Catalog Numbering System	4-5
Wire Ranges	4-6
Non-Fusible Safety Switch AIC Ratings When Protected by a 3VA Circuit Breaker	4-7
General Duty Safety Switches	
General Duty Switches—Features	4-9
240V Fusible—Selection	4-10
240V Non-Fusible—Selection	4-11
Heavy Duty Safety Switches	
Heavy Duty Switches—Features	4-12
240V Fusible—Selection	4-13
600V Fusible—Selection	4-14
600V Non-Fusible—Selection	4-15
Type 4/4X and 12 with Viewing Window—Selection	4-16
Special Applications Safety Switches	
Elevator Control Switches in NEMA Type 1, 3R, and 12 Enclosures	4-17 – 4-18
Heavy-Duty Shunt Trip Safety Switches	4-19 – 4-20
Heavy-Duty Switches with Surge Protection	4-21 – 4-22
4-Pole and 6-Pole—Selection	4-23
Interlocked Receptacle—Selection	4-24
Non-Metallic—Selection	4-25
Enclosed Solar PV Disconnects	4-26
Double-Throw Switches—Selection	4-27 – 4-28
Accessories—General and Heavy Duty Switches	
Class R Fuse Clips, Class J Fusing, Class T Fuse Adapter Kits	4-29
Neutral Kits, 200% Neutral Kits, Fuse Puller Kits	4-29
Auxiliary Contacts, Copper Lug Kits	4-31
Equipment Ground Kits, Isolated Ground Kits	4-31
Interchangeable Hubs	4-32
Compression Lug, Neutral Barrier Kits, Lugs and Wire Ranges	4-32
Multiple Padlocks	4-32
Dimensions and Weights	
General and Heavy Duty Switches	4-33 – 4-36
Type 1 and 3R Knockout Diagrams	4-38 – 4-39
Non-Metallic and Receptacle Switch Dimensions	4-40
4-Pole and 6-Pole Switch Dimensions	4-41
Double-Throw Switches Dimensions	4-42
Enclosed Rotary Disconnect Switches	4-43 – 4-44
VBII Safety Switch Replacement Parts	4-45
Wiring Diagrams	4-46 – 4-55

	General Duty	Heavy Duty	Double Throw
Application	General Duty Switches are intended for applications where reliable performance and continuity of service are needed, but where duty requirements are not severe and usual service conditions prevail. (These switches are intended for use primarily with supply circuits rated 240V AC or less where the available fault current is less than 100,000A when used with Class R or T fuses or 10,000A max. when used with Class H fuses.)	Heavy Duty Switches are intended for use in applications where: 1. Rugged construction, reliable performance, continuity of service and ease of maintenance are emphasized, or 2. Available fault currents higher than 10,000A are likely to be encountered, such as in manufacturing plants, mass production industries, and commercial, institution-al and other large buildings served by network systems or transformers of higher capacities. 3. System voltage is 600V AC or DC Max. 4. A Type 12 or 4 / 4X enclosure is required.	Double throw switches are intended to transfer loads from one power source to another. All 2 & 3 pole double throw switches are suitable for use as service equipment. All are UL Listed. Switches are rated for use on systems with an available fault current of up to 10,000 AIC when protected with Class H fuses or either 100,000 or 200,000 AIC when protected with Class R, J or Class T fuses. They can also be used to connect a single source of power to either of two loads, In this application it is necessary to field modify fusible switches so that the fuses are on the load side of the switching mechanism.
Short Circuit Withstand Ratings	Suitable for use on systems capable of delivering not more than 100,000 RMS symmetrical amperes of fault current as follows: Sw. Rating / AIC Rating / Protective Device① 30-600A / 10,000 / Circuit Breaker 30-600A / 10,000 / Class H Fuse 30-600A / 100,000 / Class R Fuse 100-600A / 100,000 / Class J or T Fuse	Suitable for use on systems capable of delivering not more than 200,000 RMS symmetrical amperes of fault current as follows: Sw. Rating & Tpye / AIC Rating / Protective Device① All Heavy Duty & DT / 10,000 / Circuit Breaker 30-600A HD & DT / 10,000 / Class H Fuse 60A Compact HD / 100,000 / Class R, J or T Fuse GD & 4P DT / 100,000 / Class R, J or T Fuse 30-600A HD / 200,000 / Class R, J or T Fuse 30-600A DTF & DTNF DT② / 200,000 / Class R, J or T Fuse 800 & 1200A HD & DT② / 200,000 / Class L or T Fuse	
Fuses	Fusible switches will accept the following UL class fuses: 30-600A "GF" Class H & K, Class R with kit 100-600A "GF" Class J-move base 100-200 "GF" Class T with kit 400-600A "GF" Class T with kit	Fusible switches will accept the following UL class fuses: 30-600A "HF" Class H & K, Class R with kit 30-400A, 600V "HF" Class J-move base 100-600A, 240V "HF" Class J-move base 100-200A "HF" Class T with kit 400-600A "HF" Class T with kit 800-1200A "HF" Class L, Class T③	Fusible switches will accept the following UL class fuses: 30-200A "DT" & "F" Class H & K, Class R with kit 30 & 60A 600V "DT" Class J-move base 100-200A "DT" Class J-move base, Class T with kit 400-600A "DT" Class J-standard, Class T-move bases 400A 240v "F" Class H-standard 400A, 600V & 600A "F" Class T-Standard
Cover Interlocks	Voidable – cover interlocks on switches prevent the switch door from being opened when in the "ON" position. No cover interlock on 30-60A GD.	Voidable dual cover interlocks standard on all heavy duty switches. Prevents cover from being opened when switch is in the "ON" position and prevents switch from being turned "ON" when door is opened.	Dual cover interlocks standard on all double throw switches. Prevents cover from being opened when switch is in the "ON" position and prevents switch from being turned "ON" when door is opened.
Underwriters' Laboratories, Inc.	Listed by UL under file #E4776 as enclosed switches and also suitable for use as service equipment (where applicable). UL98 Enclosed and Deadfront Switches.		
NEMA Specifications	Meet NEMA standard KS-1-2001 for type GD switches.	Meet NEMA standard KS-1-2001 for type HD switches.	Meet NEMA standard KS-1-2001 type GD for "DTG" & type HD for "DT", "F" & "NF" switches.
Seismic Qualifications	30-1200A GD & all HD switches and "DT" type double throw switches have been tested and designed in accordance with the American Society of Civil Engineers (ASCE) 7-17 chapter 13 - Compliance Level SDS = 2.00 g (z/h = 1); 2.50 g (z/h=0)		
Groundable Neutral (All neutrals are bondable for service entrance use.)	Fusible switches have groundable neutral blocks factory installed. Non-fusible switches accept field addable neutrals.	All switches (both Fusible and Non-Fusible) are either supplied with factory installed neutrals or accept field addable neutrals.	All except 4 pole switches will accept field addable neutrals except that "DTG" 100 & 200A switches are also available with factory installed neutrals.
Padlocks	Padlockable cover latch. OFF padlock provisions on handle.	Padlockable cover latch and multiple OFF padlock provisions on handle.	Padlockable cover latch and multiple OFF padlock provisions on handle.
HP & Load Break Ratings	All General Duty, Heavy Duty and Double Throw Switches are both load break and horsepower rated.		

① The protective device can either be a fuse or circuit breaker protecting a non-fusible switch. The ampere rating of the protective device must not exceed the switch ampere rating.

② All 4 pole and fusible double switches with catalog numbers starting with "F" are rated 100,000 AIC max.

③ 800A switches do not require an adapter kit, bases can be relocated to accommodate class-T fuses. A class-T adapter kit is required available for 240V applications on 1200A switches.

General Duty	Heavy Duty	Double Throw	Features / Ratings
▪	▪	▪	30 thru 600 Amps
	▪	▪	800 and 1200 Amps
▪	▪	▪	240 Volt AC
	▪	▪	600 Volt AC
▪	▪	▪	250 Volt DC
	▪		600 Volt DC
▪	▪	▪	Double-break visible blade design (30-200A)
▪	▪	▪	Quick-make, quick-break switching action (excludes 30A GD)
	▪		Handle design for hook stick operation
▪	▪	▪	Padlockable cover latch
▪	▪	▪	Padlockable handle
▪		▪	Single voidable cover interlock (excludes 30-60A GD)
	▪	▪	Dual voidable cover interlock
▪	▪	▪	Type 1 enclosure
▪	▪	▪	Type 3R enclosure
	▪	▪	Type 12 enclosure
	▪	▪	Type 4 / 4X enclosures
▪	▪	▪	Generous wiring gutters that meet UL and NEC wire-bending space requirements
▪⑤	▪	▪	Lugs suitable for copper or aluminum at 60˚ or 75˚C
▪	▪	▪	CU/AL wire lugs that meet UL 486B requirements
	▪	▪	Suitable for field-convertible compression connectors
▪⑥	▪	▪	All plated copper current carrying parts (except lugs)
▪	▪	▪	Spring reinforced Fuse Clips (except 30-60A GD)②
	▪	▪	Clear pivoting line terminal shield
▪	▪	▪	Replacement parts (except 30-60A GD)
	▪		200% neutral available for purchase separately
▪⑦	▪①⑦	▪①⑦	Provisions for UL Class T, R and H Fuses
	▪	▪①	Provisions for UL Class J and L Fuses
	▪	▪	Metal nameplate
▪	▪	▪	Aux. switch kits (excludes 30-60A GD)
	▪③		Type 4X with stainless steel interior parts
▪④	▪		Rolled flange enclosure design (30-200A)
	▪	▪	Isolated ground kits

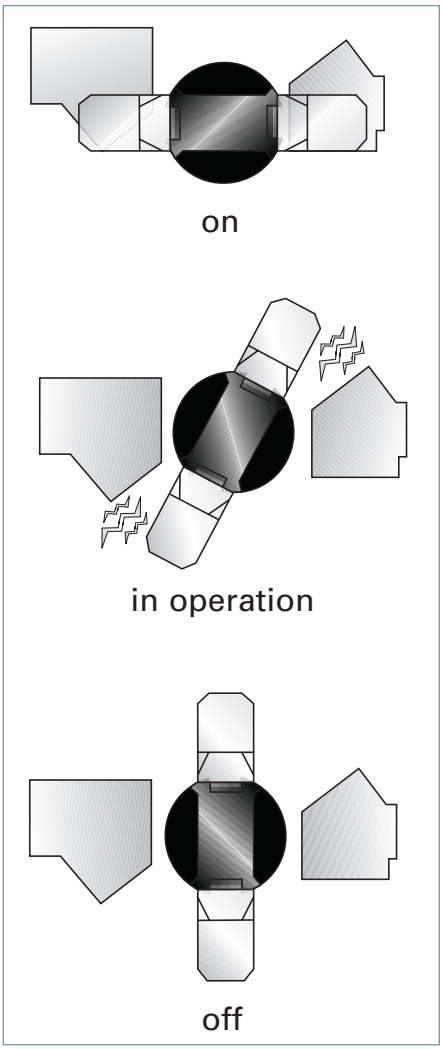

Double Break Switching Action

Like the time-proven Vacu-Break Design, the Siemens VBII double break switching action breaks the arc in two places in 30-600A ratings. This reduces heat generation and increases switching speed by doubling the breaking distance. The result is enhanced performance and increased longevity. We also provide the most visible blade design available today. Unlike conventional knife blade switches, the blades are self-aligning to ensure positive contact. In addition, they have no wear and friction point since the "electrical hinge" has been eliminated. The result is a very fast, positive and reliable switching action for even the most severe applications.

① 400, 600V & 600A fusible, double-throw switches accept only Class J or T fuses. Only 800 & 1200A HD switches will accept Class L fuses.
② 30-60A general duty switches have fuse clips constructed of spring type copper.
③ 30-200A Type VBII in stainless steel enclosures.
④ 100-200A.
⑤ 60A only suitable for Cu at 75°.
⑥ 200A general duty switches have aluminum neutral assemblies.
⑦ 100-600A GD & DT and 100-1200A HD switches will accept Class T fuses.

Enclosure Types

A **Type 1** enclosures are intended for indoor use primarily to provide protection against contact with the enclosed equipment in locations where unusual service conditions do not exist.

B **Type 3R** enclosures are intended for outdoor use primarily to provide a degree of protection against falling rain and sleet and must remain undamaged by the formation of ice on the enclosure. They are not intended to provide protection against conditions such as dust, internal condensation, or internal icing.

C **Type 4, 4X** enclosures are intended for indoor or outdoor use primarily to provide a degree of protection against windblown dust, rain, splashing water and hose-directed water. They are not intended to provide protection against conditions such as internal condensation or internal icing. Also meets 4X definition by providing a high degree of protection against corrosion. Siemens 30-200A stainless steel 4X switches are supplied stainless interior parts and hardware as standard.

D **Type 4** enclosures are intended for indoor or outdoor use primarily to provide a degree of protection against windblown dust, rain, splashing water and hose-directed water. They are not intended to provide protection against conditions such as internal condensation or internal icing.

E **Type 12**① enclosures are intended for indoor use primarily to provide a degree of protection against dust, falling dirt and dripping water. They are not intended to provide protection against conditions such as internal condensation.

Type 7/9 enclosures for use in hazardous locations. Use with molded case switches listed in Section 7.



A



B



C D



E

Load Break Ratings

All Siemens safety switches are load break rated. The load break rating is assigned by UL after the switching unit has successfully performed the following tests:

Switch Ampere Rating	Number of ON/OFF Operations per Minute	Number of Operations		
		With Current	Without Current	Total
30–100	6	6000	4000	10000
200	5	6000	2000	8000
400	4	1000	5000	6000
600	3	1000	4000	5000
800	2	500	3000	3500
1200	1	500	2000	2500

Maintenance

Refer to the latest edition of the following standards for switch maintenance.

- NEMA KS-3: Guidelines for Inspection and Preventive Maintenance of Switches Used in Commercial and Industrial Applications (available online at www.nema.org)
- NFPA 70B: Recommended Practice for Electrical Equipment Maintenance (available online at www.nfpa.org)

Horsepower Ratings

All Siemens safety switches, where appropriate, are horsepower rated. Ratings are approved by UL only after the switching unit has undergone testing to determine its acceptability which includes repeated interruption of the locked rotor current of the motor for which it is to be rated as follows:

Max HP Rating	Number of ON/OFF Operations per minute	Number of Cycles of Operation
100	6	50
500	1	10

① VBII Type 12 switches are also rated 3R & 3S for outdoor use. Type 3R is defined in B above. 3S rated enclosures provide a degree of protection against windblown dust and allow operation when the enclosure is ice laden.

Catalog Numbering System

Type VBII Safety Switch Catalog Numbering System

H	F	3	6	4	N	R	CU	A

Switch Type

L =	General Duty Quick Install④
G =	Gen. Duty
H =	Heavy Duty
DT =	Double Throw
DTG =	General Duty DT

Fused or Non-Fused

F =	Fused
NF =	Non-Fused

Number of Poles

2 =	2	**4** =	4
3 =	3	**6** =	6

Voltage

1 =	120V or 120/240V
2 =	240V
6 =	600V

Amperes

1 =	30A	**5** =	400A
2 =	60A	**6** =	600A
3 =	100A	**7** =	800A
4 =	200A	**8** =	1200A

Series Type

A =	All General Duty, 400A HD, 600A HD
Omit =	All HD except 400A, 600A

Special Applications With:

CH =	Crouse-Hinds Receptacle
H =	Height or Size Reduced
L =	Overzised enclosure / Plus Series
LL =	Max Series (30A GD)
PN =	Pyle-National Receptacle
PV =	Photovoltaic rated
PVPG =	Photovoltaic rated, Positive Ground
W =	Viewing Window

Enclosure Type

Omit =	Type 1, Indoor
R =	Type 3R, Outdoor
S =	Type 4 / 4X, Stainless Steel
SS =	Type 4 / 4X, 316 Grade Stainless Steel
X =	Type 4 / 4X, Non-Metallic
J =	Type 12, Industrial

With or Without Neutral

Omit =	Less Neutral
N =	With Neutral

Type VBII Accessories Catalog Numbering System

H	R	6	4	A

Switch Type

H =	Heavy Duty
G =	General Duty③

Accessory Type

A1 =	Auxiliary Switch 1/NO and 1/NC
A2 =	Auxiliary Switch 2/NO and 2/NC
A3 =	Auxiliary Switch Low Current
CL =	Compression Lug Barrier / Mounting Kit
CU =	Copper Lug③
G =	Ground Lug Kit
G2 =	Insulated Ground Lug Kit
J =	Class J Fuse Kit②
LC =	Copper Lug Kit③
N =	Neutral
N2 =	200% Neutral③
NCM =	Field Replacement Lug Kit②
P =	Fuse Puller Kit
R =	Class R - Fuse Clip Kit
T =	Class T - Fuse Kit

Series Type

A =	All General Duty, 400A HD, 600A HD
Omit =	All HD except 400A, 600A

Amperes

1 =	30A	**1234** =	30/60/100/200A
2 =	60A	**4** =	200A
12 =	30/60A	**5** =	400A
3 =	100A	**56** =	400/600A
23 =	60/100A	**5678** =	400/600/800/1200A
123 =	30/60/100A	**6** =	600A
		78 =	800/1200A

Maximum Voltage

2 =	240V Max①
6 =	600V Max

Note: Catalog numbering systems above do not apply to 4-pole & Type "F" & "FR" double throw switches & accessories.

① For 400A, 600A use 680V max accessories except for T Fuse Kit.
② Only offered for 400A, 600A.
③ For 30A-200A, 800A-1200A.
④ Quick install switches are NEMA 3R rated with ground lug included and no top top hub provision.

Wire Ranges (Line, Load and Standard Neutral)

Switch Ampere Rating	Wire Range with Wire Bending Space Per NEC Requirements	Lug Wire Range
30GD	#14-8 AWG (Cu/Al)	#14-2 AWG (Cu/Al)①
60GD	#14-6 AWG (Cu)	#14-2 AWG (Cu)①
30HD	#14-6 AWG (Cu/Al)	#14-2 AWG (Cu/Al)
60HD②③	#14-3 AWG (Cu/Al)	#14-2 AWG (Cu/Al)
100④	#14-1/0 AWG (Cu/Al)	#14-1/0 AWG (Cu/Al)
200⑤	#6 AWG-250 Kcmil (Cu/Al)	#6 AWG-300 Kcmil (Cu/Al)
400⑥	(1) 1/0 AWG-600 Kcmil (Cu/Al) (2) 1/0 AWG-500 Kcmil (Cu/Al)	(2) 1/0 AWG-600 Kcmil (Cu/Al)
600⑥	(1) 1/0 AWG-600 Kcmil (Cu/Al) (2) 1/0 AWG-500 Kcmil (Cu/Al)	(2) 1/0 AWG-600 Kcmil (Cu/Al)
800	(3) 1/0 AWG-750 Kcmil (Cu/Al) Line Load (4) 1/0 AWG-750 Kcmil (Cu/Al) neutral	(3) 1/0 AWG-750 Kcmil (Cu/Al) Line Load (4) 1/0 AWG-750 Kcmil (Cu/Al) neutral
1200	(4) 3/0 AWG-750 Kcmil (Cu/Al) Line Load (4) 1/0 AWG-750 Kcmil (Cu/Al) neutral	(4) 1/0 AWG-750 Kcmil (Cu/Al) Line Load (4) 1/0 AWG-750 Kcmil (Cu/Al) neutral

■ Built to order. Allow 3-4 weeks for delivery.

① Neutral lugs (only) are UL approved to accept #14-4 CU/Al cable.
② Compact HD NF switches are also UL approved for #2 Cu/Al conductors.
③ Also for 30A oversized heavy duty switches.
④ Also for 60A oversized heavy duty switches.
⑤ All 200A Heavy Duty Switches have a wire range & wire bending space for (1) #6-300 Kcmil (Cu/Al).
⑥ Max. wire size for height reduced switches is 500 kcmil (Cu/Al).

Non-Fusible Safety Switch Short Circuit Current Ratings when protected by a Molded Case Circuit Breaker (MCCB)

Heavy Duty Switch Rating (Amps)	Fuse Class or Circuit Breaker Type	3-Phase			250 VDC / 600 VDC
		240 VAC	480 VAC	600 VAC	
Protected by Fuse					
All	H, K	10 kA	10 kA	10 kA	Up to 10 kA
	R, T, J, L	200 kA	200 kA	200 kA	—
Protected by Circuit Breaker					
All	Any Brand CB	10 kA	10 kA	10 kA	Up to 10 kA
Protected by 3VA Circuit Breaker①					
30	SEAS / SEAB	18 kA	18 kA	18 kA	Up to 10 kA
30	MEAS / MEAB	18 kA	18 kA	18 kA	
60-100	SEAS / SEAB	65 kA	25 kA	14 kA	
60-100	MEAS / MEAB	85 kA	35 kA	18 kA	
60-100	HEAS / HEAB	150 kA	65 kA	25 kA	
60-100	MDAE	100 kA	35 kA	18 kA	
60-100	HDAE	100 kA	65 kA	22 kA	
60-100	CDAE	200 kA	100 kA	35 kA	
60-100	LDAE	200 kA	150 kA	50 kA	
60-100	EDAE	—	200 kA	100 kA	
200	MFAS	85 kA	35 kA	18 kA	
200	HFAS	100 kA	65 kA	25 kA	
200	CFAS	200 kA	100 kA	35 kA	
200	MFAE	100 kA	35 kA	18 kA	
200	HFAE	100 kA	65 kA	22 kA	
200	CFAE	200 kA	100 kA	35 kA	
200	LFAE	200 kA	150 kA	50 kA	
200	EFAE	—	200 kA	100 kA	
400	MJAS	85 kA	35 kA	18 kA	
400	HJAS	100 kA	65 kA	25 kA	
400	CJAS	200 kA	100 kA	35 kA	
400	MJAE	100 kA	35 kA	18 kA	
400	HJAE	100 kA	65 kA	22 kA	
400	CJAE	200 kA	100 kA	35 kA	
400	LJAE	200 kA	150 kA	50 kA	
400	EJAE	—	200 kA	100 kA	
600	MLAS	85 kA	35 kA	18 kA	
600	HLAS	100 kA	65 kA	25 kA	
600	CLAS	200 kA	100 kA	35 kA	
600	MLAE	100 kA	35 kA	18 kA	
600	HLAE	100 kA	65 kA	22 kA	
600	CLAE	200 kA	100 kA	35 kA	
600	LLAE	200 kA	150 kA	50 kA	
600	ELAE	—	200 kA	100 kA	
Protected by Sentron Circuit Breaker②					
30	EDAE	200 kA	100 kA	100 kA	Up to 10 kA
60-100	EDAE	200 kA	200 kA	100 kA	
60-100	NEB, NGB, NEG, NGG, ED4	18 kA	18 kA	—	
60-100	ED6	18 kA	18 kA	18 kA	
200	F(X)D6-A, J(X)D6-A	18 kA	18 kA	18 kA	
400	(H)J(X)D6-A, (H)L(X)D6-A	25 kA	25 kA	25 kA	
600	(H)L(X)D6-A	25 kA	25 kA	25 kA	
1200	NNG	25 kA	25 kA	25 kA	

① Includes Nonfused Double throw and OEM switches 30-200 amps
② Includes Nonfused Double throw and OEM switches

Non-Fusible Safety Switch Short Circuit Current Ratings when protected by a Molded Case Circuit Breaker (MCCB) cont.

General Duty Switch Rating (Amps)	Fuse Class or Circuit Breaker Type	3-Phase			250 VDC
		240 VAC	480 VAC	600 VAC	
Protected by Fuse					
All	H, K, R, T, J	10 kA	—	—	Up to 10 kA
Protected by Circuit Breaker					
All	Any Brand CB	10 kA	—	—	Up to 10 kA
Protected by 3VA Circuit Breaker①					
60-100	SEAS / SEAB	65 kA	—	—	Up to 10 kA
60-100	MEAS / MEAB	85 kA	—	—	
60-100	MDAE	100 kA	—	—	
60-100	HDAE	100 kA	—	—	
200	MFAS	85 kA	—	—	
200	HFAS	100 kA	—	—	
200	MFAE	100 kA	—	—	
200	HFAE	100 kA	—	—	
400	MJAS	85 kA	—	—	
400	HJAS	100 kA	—	—	
400	MJAE	100 kA	—	—	
400	HJAE	100 kA	—	—	
600	MLAS	85 kA	—	—	
600	HLAS	100 kA	—	—	
600	MLAE	100 kA	—	—	
600	HLAE	100 kA	—	—	

Non-Fusible Safety Switch Short Circuit Current Ratings when protected by a Legacy Circuit Breaker

Breaker Frame	Non-Fused Switch	UL Listed Short Circuit Current Rating
NEG, NGB, ED4	30 DT (240V)	18 kA Thru 240 VAC
NEB, NEG, NGG, NGB, ED4	100A GD & DT (240V)	18 kA Thru 240 VAC
NEB, NEG, NGG, NGB, ED4	30-100A HD & DT (600V)	18 kA Thru 480 VAC
ED6	30-100A HD & DT (600V)	18 kA Thru 600 VAC
FD6-A, JD6-A	200A HD & DT (600V)	18 KA Thru 600 VAC
JD6-A, LD6-A	400A GD & DT (240V)	18 kA Thru 240 VAC
JD6-A, LD6-A	400A HD & DT (600V)	18 kA Thru 600 VAC
LD6-A	600A GD & DT (240V)	25kA Thru 240 VAC
LD6-A	600A HD & DT (600V)	25kA Thru 600 VAC
NNG	1200A HD & DT (600V)	25 kA Thru 600 VAC

① Includes Nonfused Double throw and OEM switches 30-200 amps

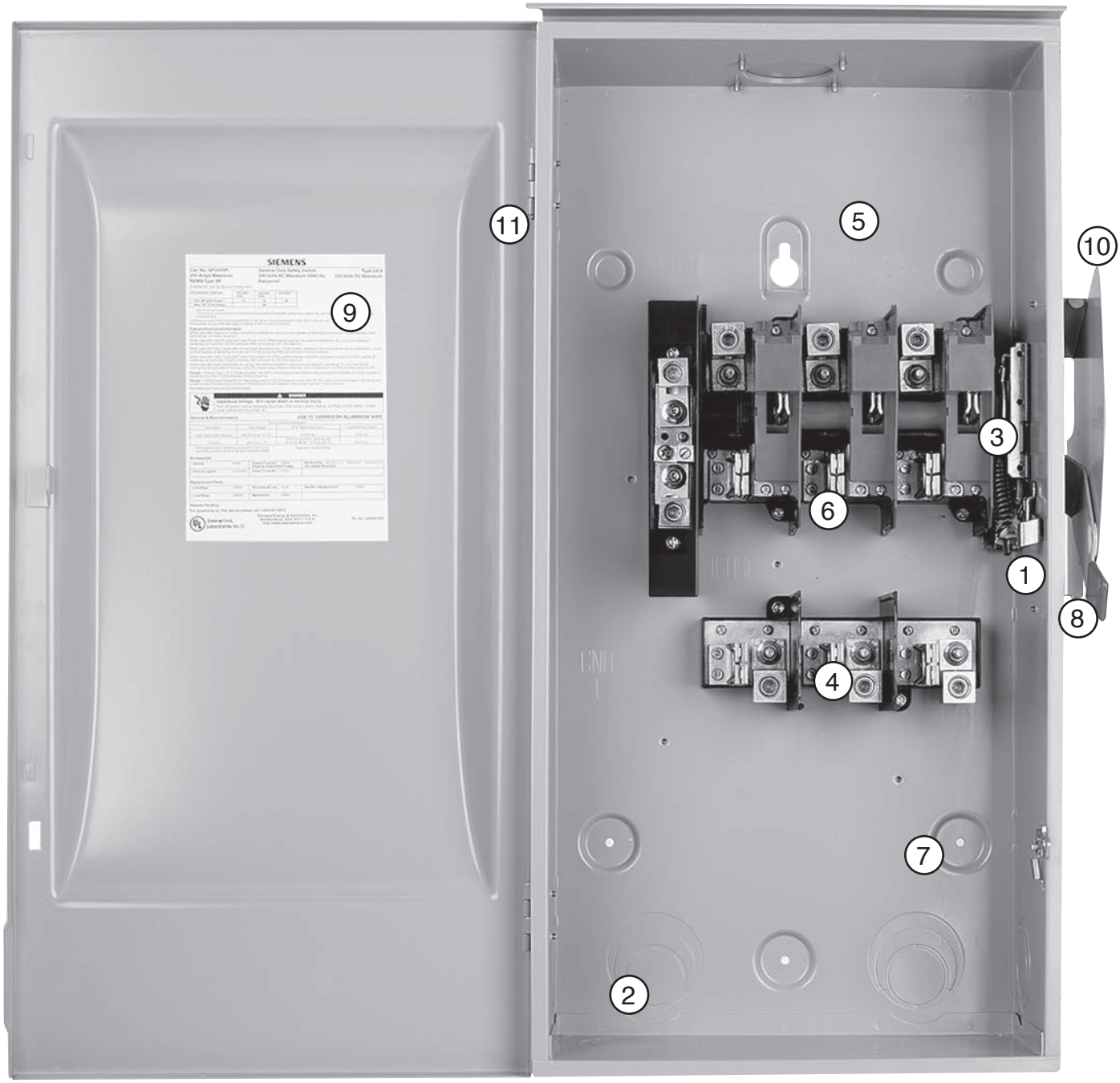

1. Cover interlock
2. Tangential knockouts 100-600A for easy conduit lineup
3. Quick-make, quick-break operating mechanism that ensures positive operation
4. Provisions for T, R, J, H, and K class fuses (T & J 100-600A)
5. Wiring gutters that meet or exceed NEC wire-bending space requirements
6. Visible blade, double-break switch action
7. Positive 2 or 3 point mounting
8. Highly visible red handle grip
9. Informative door labeling which includes replacement parts list
10. Handle and cover padlocking provisions
11. 100A and above have side-hinged door that opens 180 degrees for easier wiring

Note. 400A and 600A GD switches include internal shields which meet 2020 NEC 230.62 touch safe requirements for service entrance equipment.





System	Ampere Rating	Indoor — Type 1 Catalog Number	Indoor — Type 1 Ship Wt. (lbs) Std. Pkg	Outdoor — Type 3R Catalog Number	Outdoor — Type 3R Ship Wt. (lbs) Std. Pkg	Horsepower Rating① 240V AC 1-Phase, 2-Wire Std.	1-Phase, 2-Wire Max.	2-Phase, 4-Wire Std.	2-Phase, 4-Wire Max.	3-Phase, 3-Wire Std.	3-Phase, 3-Wire Max.	250 Volt DC Std.
240 Volt Fusible②												
2-Pole, 2-Fuse, and Solid Neutral③④												**240 Volt AC/250 Volt DC**
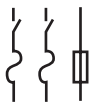	30	**GF221NA⑤**	30⑦	**GF221NRA⑤⑨**	30⑦	1½	3	—	—	3	7½	5
	30	**GF221NLA④**	20⑧	**GF221NRLA⑥⑨**	20⑧	1½	3	—	—	3	7½	5
	60	**GF222NA**	20⑧	**GF222NRA⑨**	20⑧	3	10	—	—	7½	15	10
	100	**GF223NA**	17	**GF223NRA**	17	7½	15	—	—	15	30	20
	200	**GF224NA**	37	**GF224NRA**	37	15	—	—	—	25	60	40
	400	**GF225NA**	91	**GF225NRA**	91	—	—	—	—	50	125	50
	600	**GF226NA**	92	**GF226NRA**	92	—	—	—	—	75	200	50
3-Pole, 3-Fuse, and Solid Neutral④												**240 Volt AC/250 Volt DC**
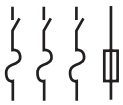	30	**GF321NA⑤**	30⑦	**GF321NRA⑤⑨**	30⑦	1½	3	—	—	3	7½	5
	30	**GF321NLA⑥**	20⑧	**GF321NRLA⑥⑨**	20⑧	1½	3	—	—	3	7½	5
	60	**GF322NA**	20⑧	**GF322NRA⑨**	20⑧	3	10	—	—	7½	15	10
	100	**GF323NA**	17.5	**GF323NRA**	17.5	7½	15	—	—	15	30	20
	100	**GF323NLA**	22.5	**GF323NLA**	22.5	7½	15	—	—	15	30	20
	200	**GF324NA**	37	**GF324NRA**	37	15	—	—	—	25	60	40
	200	**GF324NLA**	43.5	**GF324NRLA**	43.5	15	—	—	—	25	60	40
	400	**GF325NA**	94.6	**GF325NRA**	94.6	15	—	—	—	50	125	50
	600	**GF326NA**	95.6	**GF326NRA**	95.6	15	—	—	—	75	200	—

① Dual HP ratings: Std.- applies with installed non-time delay fuses. Max.- applies with installed time-delay fuses.
② Internal shields for 30A to 200A switches to meet 2020 NEC 230.62 touch safe requirements for service entrance equipment can be purchased separately.
③ These switches are UL-listed for application on grounded B-phase systems.
④ Service entrance labeled unless otherwise noted.
⑤ Compact series
⑥ PLUS series: largest enclosure option for 60A non-fusible, 30A fusible.
⑦ 10 switches per standard package.
⑧ 5 switches per standard package.
⑨ Has provision for ECHA type hub.

General Duty Safety Switches





System	Ampere Rating	Indoor — Type 1 Catalog Number	Indoor — Type 1 Ship Wt. (lbs) Std. Pkg	Outdoor — Type 3R Catalog Number	Outdoor — Type 3R Ship Wt. (lbs) Std. Pkg	Horsepower Rating① 240V AC 1-Phase, 2-Wire Std.	1-Phase, 2-Wire Max.	2-Phase, 4-Wire Std.	2-Phase, 4-Wire Max.	3-Phase, 3-Wire Std.	3-Phase, 3-Wire Max.	250 Volt DC Std.
240 Volt Non-Fusible②③												
2-Pole Quick Install				**1 or 2-Pole — No Fuse**								**240 Volt — 1-Phase, 2-Wire**
	30	—	—	**LNF221RLA④**	30⑦	—	3	—	—	—	—	—
	30	—	—	**LNF221RLLA④⑤**	38⑧	—	3	—	—	—	—	—
	60	—	—	**LNF222RA④**	30⑦	—	10	—	—	—	—	—
	60	—	—	**LNF222RLA④⑥**	38⑧	—	10	—	—	—	—	—
2-Pole or 3-Pole												**240 Volt AC/250 Volt DC**
	30	**GNF221A⑨⑩**	20⑦	**GNF221RA⑨⑩⑭**	20⑦	—	3	—	—	—	—	5
	30	**GNF221LA⑪**	30⑦	**GNF221RLA⑪⑭**	30⑦	—	3	—	—	7½	—	5
	30	**GNF221LLA⑫**	20⑧	**GNF221RLLA⑫⑭**	20⑧	—	3	—	—	7½	—	5
	30	**GNF321A⑨⑩**	20⑦	**GNF321RA⑨⑩⑭**	20⑧	—	3	—	—	7½	—	5
	30	**GNF321LA⑪**	30⑦	**GNF321RLA⑪⑭**	30⑦	—	3	—	—	7½	—	5
	30	**GNF321LLA⑫**	20⑧	**GNF321RLLA⑫⑭**	20⑧	—	3	—	—	7½	—	5
	60	**GNF222A**	30⑦	**GNF222RA⑭**	30⑦	—	10	—	—	15	—	10
	60	**GNF222LA⑬**	20⑧	**GNF222RLA⑬⑭**	20⑧	—	10	—	—	15	—	10
	60	**GNF322A**	30⑦	**GNF322RA⑭**	30⑦	—	10	—	—	15	—	10
	60	**GNF322LA⑬**	20⑧	**GNF322RLA⑬⑭**	20⑧	—	10	—	—	15	—	10
	100	—	—	**GNF223RA**	17	—	15	—	—	30	—	20
	100	**GNF323A**	17	**GNF323RA**	18	—	15	—	—	30	—	20
	200	—	—	**GNF224RA**	35	—	15	—	—	60	—	40
	200	**GNF324A**	35	**GNF324RA**	35	—	15	—	—	60	—	40
	400	**GNF325A**	114	Use 600V Switch **HNF365RA**		—	15	—	—	125	—	50
	600	**GNF326A**	116	Use 600V Switch **HNF366RA**		—	15	—	—	200	—	—

① Dual HP ratings: Std.- applies with installed non-time delay fuses. Max.- applies with installed time-delay fuses.
② Service entrance labeled unless otherwise noted.
③ Internal shields for 30A to 200A switches to meet 2020 NEC 230.62 touch safe requirements for service entrance equipment can be purchased separately.
④ Quick install switches are NEMA 3R rated with ground lug included and no top top hub provision.
⑤ MAX series: Larger enclosure compared to LNF221RLA.
⑥ PLUS series: Larger enclosure compared to LNF222RA.
⑦ 10 switches per standard package.
⑧ 5 switches per standard package.
⑨ Not suitable for service entrance.
⑩ Compact series
⑪ PLUS series: larger enclosure, metal handle, quick make-break action.
⑫ MAX series: largest enclosure option for 30A non-fusible, included same upgraded features as PLUS series and additional KOs.
⑬ PLUS series: largest enclosure option for 60A non-fusible, 30A fusible.
⑭ Has provision for ECHA type hub.

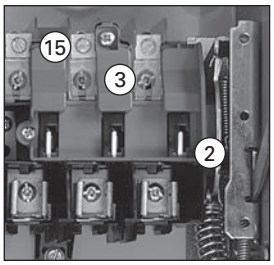



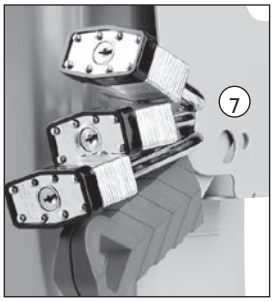



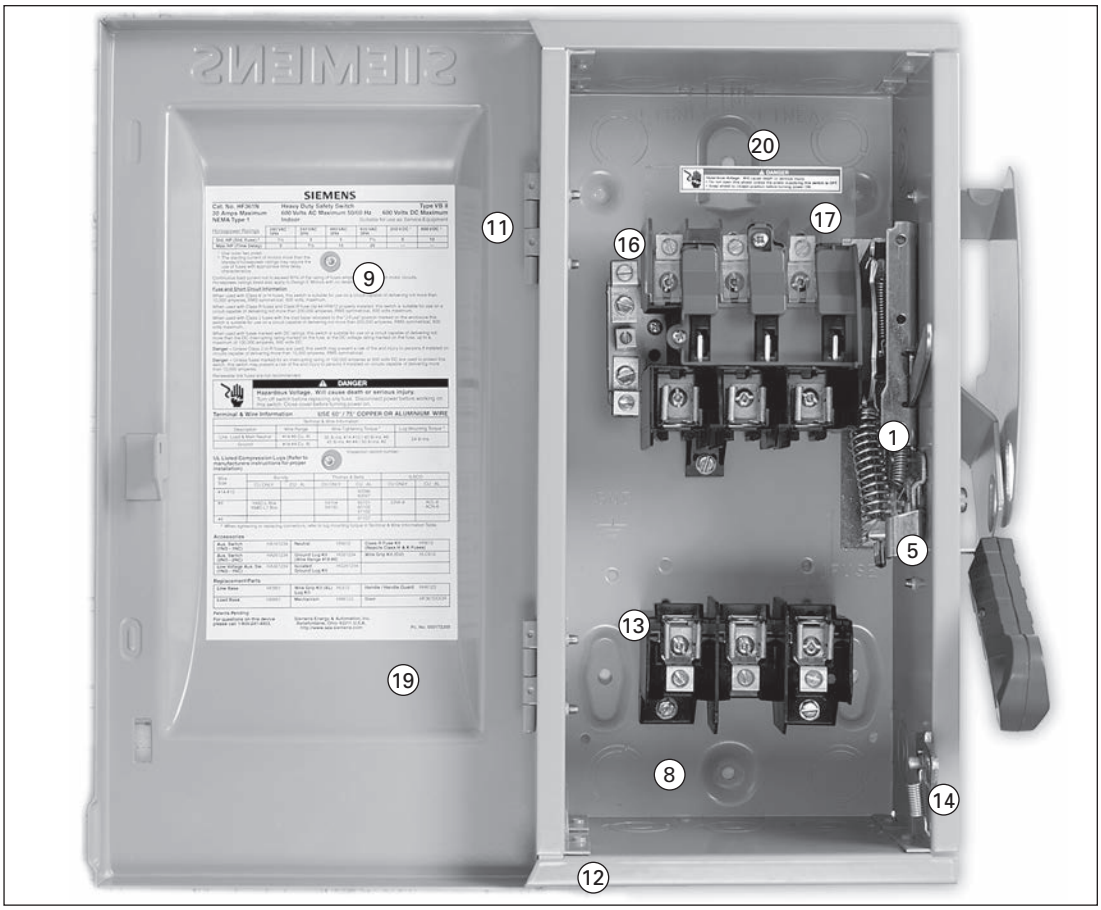

1. Quick-make, quick-break operating mechanism that ensures positive operation.
2. Visible blade, double-break switching action.
3. Arc chutes dissipate heat and prolong switch life.
4. Highly visible red handle grip. Designed for hook stick operation.
5. Defeatable dual cover interlock.
6. Center punch provided for field drilling to allow ON padlocking.
7. Handle can be padlocked in the OFF position with up to (3) padlocks with 5/16" hasps.
8. Generous top, bottom and side gutters that meet or exceed NEC wire-bending space requirements.
9. Informative door labeling which includes replacement parts list.
10. Tangential knockouts through 600A for easy conduit lineup.
11. Side-hinged door that opens past 180 degrees for easier wiring.
12. Unique enclosure design increases rigidity and prevents cuts and scrapes to conductors and installer's hands.
13. Spring reinforced fuse clips that assure reliable contact for cool operation.
14. Door latch securely holds door closed and allows cover padlocking.
15. Front removable mechanical lugs that are suitable for CU/Al 60 or 75° C conductors.
16. Lugs are field convertible to copper body and to a wide variety of compression connectors.
17. Hinged clear line terminal shield with probe holes for inspecting or testing line side terminals.

    All HD switches include internal shields which meet 2020 NEC 230.62 touch safe requirements for service entrance equipment.
18. Embossed aluminum nameplate on Heavy Duty Switches provides highly visible ON/OFF indication.
19. Drawn cover for increased rigidity and resistance to abuse.
20. Top key hole and bottom mounting holes provide easy 2 or 3 point mounting.





System	Ampere Rating	Indoor — Type 1 Catalog Number	Indoor — Type 1 Ship Wt. (lbs.) Std. Pkg	Outdoor — Type 3R Catalog Number	Outdoor — Type 3R Ship Wt. (lbs.) Std. Pkg	Horsepower Rating① 240V AC 1-Phase, 2-Wire Std.	1-Phase, 2-Wire Max.	2-Phase, 4-Wire Std.	2-Phase, 4-Wire Max.	3-Phase, 3-Wire Std.	3-Phase, 3-Wire Max.	250 Volt DC Std.

240 Volt Fusible⑤

2-Pole, 2-Fuse, and Solid Neutral③ (Also used for 2-Pole, 2-Wire Applications) 240 Volt AC/250 Volt DC

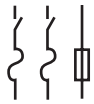

30	HF221N	12	HF221NR	13	1½	3	—	—	3	7½	5
60	HF222N	18	HF222NR	19	3	10	—	—	7½	15	10
100	HF223N	23	HF223NR	24	7½	15	—	—	15	30	20
200	HF224N	47	HF224NR	48	15	—	—	—	25	60	40
400	HF225NA	91.1	HF225NRA	91.1	15	—	—	—	50	125	50
600	HF226NA	95.6	HF226NRA	95.6	15	—	—	—	75	200	50
800	HF227N	365	HF227NR	365	—	—	—	—	100	250	50
1200	HF228N■	385	HF228NR■	385	—	—	—	—	100	250	50

3-Pole, 3-Fuse, and Solid Neutral (Also used for 3-Pole, 3-Wire Applications) 240 Volt AC/250 Volt DC

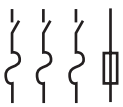

30	HF321N	14	HF321NR	15	1½	3	—	—	3	7½	5
60	HF322N	19	HF322NR	20	3	10	—	—	7½	15	10
100	HF323N	25	HF323NR	26	7½	15	—	—	15	30	20
200	HF324N	49	HF324NR	50	15	—	—	—	25	60	40
400	HF325NA	94.6	HF325NRA	94.6	15	—	—	—	50	125	50
600	HF326NA	99.6	HF326NRA	99.6	15	—	—	—	75	200	50
800	HF327N	375	HF327NR	375	—	—	—	—	100	250	50
1200	HF328N	395	HF328NR	388	—	—	—	—	100	250	50

240 Volt Fusible⑤

2-Pole, 2-Fuse④ 240 Volt AC/250 Volt DC



	Type 4/4X Stainless⑦		Type 12 Industrial⑥								
30	HF221S	13	HF221J	13	1½	3	—	—	3	7½	5
60	HF222S	19	HF222J	19	3	10	—	—	7½	15	10
100	HF223S	24	HF223J	24	7½	15	—	—	15	30	20
200	HF224S	48	HF224J	48	15	—	—	—	25	60	40

3-Pole, 3-Fuse④ (Also used for 2-Pole, 2-Wire Applications in 400–800A Ratings) 240 Volt AC/250 Volt DC



30	HF321S	14	HF321J	14	1½	3	—	—	3	7½	—
60	HF322S	20	HF322J	20	3	10	—	—	7½	15	10
100	HF323S	25	HF323J	25	7½	15	—	—	15	30	20
200	HF324S	49	HF324J	49	15	—	—	—	25	60	40
400	HF325SA	93	HF325JA	93	15	—	—	—	50	125	50
600	HF326SA	98	HF326JA	98	15	—	—	—	75	200	50
800	HF327S■	370	HF327J■	365	—	—	—	—	100	250	50

■ Built to order. Allow 3-5 weeks for delivery.
① Height reduced switch (45.25 rather than 56 inches in height) for use with 500MCM or smaller conductors.
② Dual horsepower ratings: Std.- applies when non-time delay fuses are installed. Max.- applies when time-delay fuses are installed.
③ These switches are UL-listed for application on grounded B-phase systems and are suitable for 3-phase motor applications.
④ When a neutral is required use a field installed neutral kit.
⑤ Suitable for use as service entrance equipment.
⑥ Also rated Type 3S/3R.
⑦ 304 grade stainless steel. For switches with enclosures constructed from 316 grade stainless steel, substitute "SS" in catalog number for "S." 316 available up through 600A.





System	Ampere Rating	Indoor — Type 1 Catalog Number	Indoor — Type 1 Ship Wt. (lbs.) Std. Pkg	Outdoor — Type 3R Catalog Number	Outdoor — Type 3R Ship Wt. (lbs.) Std. Pkg	Horsepower Rating④ 480V AC 1-Phase, 2-Wire Std.	480V AC 1-Phase, 2-Wire Max.	480V AC 3-Phase, 3-Wire Std.	480V AC 3-Phase, 3-Wire Max.	600V AC 1-Phase, 2-Wire Std.	600V AC 1-Phase, 2-Wire Max.	600V AC 3-Phase, 3-Wire Std.	600V AC 3-Phase, 3-Wire Max.	250 Volt DC	600 Volt DC
600 Volt Fusible⑤															
2-Pole, 2-Fuse③														**480 Volt AC/600 Volt AC/600 Volt DC**	
	30	HF261	15	HF261R	15	3	7½	—	—	3	10	—	—	5	15
	60	HF262	20	HF262R	20	5	20	—	—	10	25	—	—	10	30
	100	HF263	26	HF263R	27	10	30	—	—	15	40	—	—	20	50
3-Pole, 3-Fuse														**480 Volt AC/600 Volt AC/250 Volt DC①**	
	30	HF361	14	HF361R	15	3	7½	5	15	3	10	7½	20	5	—
	30	—	—	HF361RL⑦	20	3	7½	5	15	3	10	7½	20	5	—
	60	HF362	19	HF362R	20	5	20	15	30	10	25	15	50	10	30⑧
	60	—	—	HF362RL⑦	25	5	20	15	30	10	25	15	50	10	30⑧
	100	HF363	24	HF363R	25	5	20	25	60	15	40	30	75	20	50⑧
	200	HF364	48	HF364R	49	25	50	50	125	30	50	60	150	40	50
	400	HF365A①	93	HF365RA①	157	—	—	100	250	—	—	125	350	50	—
	600	HF366A①	98	HF366RA①	161	—	—	150	400	—	—	200	500	50	—
	800	HF367	365	HF367R	365	—	—	200	500	—	—	250	500	50	—
	1200	HF368	383	HF368R	385	—	—	200	500	—	—	250	500	50	—
3-Pole, 3-Fuse and Solid Neutral														**480 Volt AC/600 Volt AC/250 Volt DC①**	
	30	HF361N	14	HF361NR	15	3	7½	5	15	3	10	7½	20	5	—
	60	HF362N	19	HF362NR	20	5	20	15	30	10	25	15	50	10	30⑧
	100	HF363N	25	HF363NR	26	10	30	25	60	15	40	30	75	20	50⑧
	200	HF364N	49	HF364NR	50	25	50	50	125	30	50	60	150	40	50
	400	HF365NA	94.6	HF365NRA	94.6	—	—	100	250	—	—	125	350	50	—
	600	HF366NA	99.6	HF366NRA	99.6	—	—	150	400	—	—	200	500	50	—
	800	HF367N	375	HF367NR	375	—	—	250	500	—	—	250	500	50	—
	1200	HF368N	395	HF368NR	388	—	—	250	500	—	—	250	500	50	—
600 Volt Fusible⑤															
2-Pole, 2-Fuse③														**480 Volt AC/600 Volt AC/600 Volt DC**	
		Type 4/4X Stainless⑨		Type 12 Industrial⑥											
	30	HF261S	15	HF261J■	15	3	7½	—	—	3	10	—	—	5	15
	60	HF262S	20	HF262J■	20	5	20	—	—	10	25	—	—	10	30
	100	HF263S■	27	HF263J■	27	10	30	—	—	15	40	—	—	20	50
3-Pole, 3-Fuse														**480 Volt AC/600 Volt AC/250 Volt DC①**	
	30	HF361S	13	HF361J	14	—	—	5	15	—	—	7½	20	5	—
	60	HF362S	20	HF362J	20	—	—	15	30	—	—	15	50	10	30⑧
	100	HF363S	25	HF363J	25	—	—	25	60	—	—	30	75	20	50⑧
	200	HF364S	49	HF364J	49	—	—	50	125	—	—	60	150	40	50
	400	HF365SA①	93	HF365JA①	93	—	—	100	250	—	—	125	350	50	—
	600	HF366SA①	98	HF366JA①	98	—	—	150	400	—	—	200	500	50	—
	800	HF367S	370	HF367J■	365	—	—	200	500	—	—	250	500	50	—
	1200	HF368S■	388	HF368J■	388	—	—	250	500	—	—	250	500	50	—

■ Built to order. Allow 3-5 weeks for delivery.
① 60-600A 3-Pole switches are also rated 600V DC.
② Height reduced switch (45.25 rather than 56 inches in height) for use with 500MCM or smaller conductors.
③ Use 3-Pole switch for 200A applications.
④ Dual horsepower ratings: Std.- applies when non-time delay fuses are installed. Max.- applies when time-delay fuses are installed.
⑤ Suitable for use as service entrance equipment except on 1200 Amp solidly grounded wye systems per NEC 230.95.
⑥ Also rated Type 3S/3R.
⑦ Indicates oversized enclosure (30A switch with 60A lugs in a 60A enclosure or 60A switch with 100A lugs in a 100A enclosure).
⑧ 600V DC & 600V DC horsepower rating shown requires (2) poles to be connected in series.
⑨ 304 grade stainless steel. For switches with enclosures constructed from 316 grade stainless steel, substitute "SS" in catalog number for "S." 316 available up through 600A.





System	Ampere Rating	Indoor — Type 1 Catalog Number	Indoor — Type 1 Ship Wt. (lbs.)	Outdoor — Type 3R Catalog Number	Outdoor — Type 3R Ship Wt. (lbs.)	Horsepower Rating 240 Volt 1-Phase	240 Volt 3-Phase	480 Volt 1-Phase	480 Volt 3-Phase	600 Volt 1-Phase	600 Volt 3-Phase	250V DC	600V DC
600 Volt Non-Fusible④													
2-Pole③													**480 Volt AC / 600 Volt AC / 600 Volt DC**
	30	HNF261	12	HNF261R	13	—	—	7½	—	10	—	5	15
	60	HNF262	19	HNF262R	20	—	—	20	—	25	—	10	30
	100	HNF263	24	HNF263R	25	—	—	30	—	40	—	20	50
3-Pole													**480 Volt AC / 600 Volt AC / 250 Volt DC**
	30	HNF361	12	HNF361R	13	5	10	7½	20	10	30	5	—
	30	—	—	HNF361RL⑥	19	5	10	7½	20	10	30	5	—
	60	HNF362H②	11	HNF362RH②	11	10	20	20	50	20	40	10	—
	60	HNF362①	18	HNF362R①	19	10	20	20	50	25	60	10	30⑦
	60	—	—	HNF362RL⑥	24	10	20	20	50	25	60	10	30⑦
	100	HNF363①	16	HNF363R①	16	15	40	30	75	40	100	20	50⑦
	100	HNF363L	22½	HNF363RL	22½	15	40	30	75	40	100	20	50
	200	HNF364①	35	HNF364R①	35	15	60	50	125	50	150	40	50
	200	HNF364L	43½	HNF364RL	43½	15	60	50	125	50	150	40	50
	400	HNF365A①	75	HNF365RA①	75	15	125	50	250	50	350	50	—
	600	HNF366A①	77	HNF366RA①	77	15	200	50	400	50	500	50	—
	800	HNF367	295	HNF367R	295	15	250	50	500	50	500	50	—
	1200	HNF368	305	HNF368R	307	15	250	50	500	50	500	50	—
600 Volt Non-Fusible④													
2-Pole③													**480 Volt AC / 600 Volt AC / 600 Volt DC**
		Type 4 / 4X Stainless⑧		Type 12 Industrial⑤									
	30	HNF261S	13	HNF261J	13	—	—	7½	—	10	—	5	15
	60	HNF262S	20	HNF262J	20	—	—	20	—	25	—	10	30
	100	HNF263S■	25	HNF263J■	25	—	—	30	—	40	—	20	50
3-Pole													**480 Volt AC / 600 Volt AC / 250 Volt DC**
	30	HNF361S	13	HNF361J	13	5	10	7½	20	10	30	5	—
	60	HNF362SH②	15	HNF362JH②	14	10	20	20	50	20	40	10	—
	60	HNF362S①	19	HNF362J①	19	10	20	20	50	25	60	10	30⑦
	100	HNF363S①	24	HNF363J①	24	15	40	30	75	40	100	20	50⑦
	200	HNF364S①	47	HNF364J①	47	15	60	50	125	50	150	40	50
	400	HNF365SA①	75	HNF365JA①	75	15	125	50	250	50	350	50	—
	600	HNF366SA①	77	HNF366JA①	77	15	200	50	400	50	500	50	—
	800	HNF367S	295	HNF367J■	295	15	250	50	500	50	500	50	—
	1200	HNF368S■	310	HNF368J■	310	15	250	50	500	50	500	50	—

■ Built to order. Allow 3-5 weeks for delivery.
① 60-600A 3-Pole switches are also rated 600V DC.
② Compact switch (11.1"H, 6.6"W box less cover and handle). Short circuit withstand rating—100,000 RMS sym. amps.
③ Use 3-Pole switch for 200A application.
④ Suitable for use as service entrance equipment except for 1200 when used on a 480 or 600V grounded wye system.
⑤ Also rated type 3S / 3R.
⑥ Indicates oversized enclosure (30A switch in a 60A enclosure or a 60A switch in a 100A enclosure.
⑦ 600V DC and 600V DC horsepower rating shown requires (2) poles to be connected in series.
⑧ 304 grade stainless steel. For switches with enclosures constructed from 316 grade stainless steel, substitute "SS" in catalog number for "S." 316 available for up through 600A.

Description

30–600A, 3-pole 600V max. in fusible and non-fusible versions in Type 4/4X stainless steel, and Type 12, and select 3R enclosures.

All allow viewing of visible blade position with the door closed. 30–200A also allow viewing of indicating type fuses.

Features

- Rugged installer-friendly enclosure design features a gasket flange with continuously welded seams
- Tool-free cover latches
- Two, three and four point mounting
- Metal handle with large insulating grip features a positive stop in both ON and OFF position
- Ground lugs provided as standard in Type12 and 4X switches
- Type 12 enclosures are fabricated from galvanized steel and are also rated for 3R/3S outdoor applications
- Type 4X stainless steel switches (30–200A) are provided with stainless steel interior parts
- The widest range of accessories available including 200% neutrals, gold plated PLC auxiliary contacts and isolated ground kits



System	Ampere Rating	Catalog Number	Ship Wt. (lbs.)	Maximum Horsepower Rating② 240V AC 1-Phase, 2-Wire	240V AC 3-Phase	480V AC 3-Phase	600V AC 3-Phase	250V DC	600V DC
3-Pole, 3-Wire Fusible, Type 3R④								**600 Volt AC / 250 Volt DC①**	
	30	HF361RW	17	3	7½	15	20	5	—
	60	HF362RW	22	10	15	30	50	10	30⑤
	800	HF367NRW	375	—	—	500	500	50	—
	1200	HF368NRW	388	—	—	500	500	50	—
3-Pole, 3-Wire Non-Fusible, Type 3R④								**600 Volt AC / 250 Volt DC①**	
	30	HNF361RW	14	3	10	20	30	5	—
	60	HNF362RW	21	10	20	50	60	10	30⑤
	800	HNF367RW	295	15	250	500	500	50	—
	1200	HNF368RW	307	15	250	500	500	50	—
3-Pole, 3-Wire Fusible, Type 12③④								**600 Volt AC / 250 Volt DC①**	
	30	HF361JW	17	3	7½	15	20	5	—
	60	HF362JW	22	10	15	30	50	10	30⑤
	100	HF363JW	26	15	30	60	75	20	50⑤
	200	HF364JW	53	—	60	125	150	40	50
	400	HF365JWA	93	—	125	250	350	50	—
	600	HF366JWA	98	—	200	400	500	50	—
	800	HF367JW	365	—	—	500	500	50	—
	1200	HF368JW	388	—	—	500	500	50	—
3-Pole, 3-Wire Non-Fusible, Type 12③④								**600 Volt AC / 250 Volt DC**	
	30	HNF361JW	14	3	10	20	30	5	—
	60	HNF362JW	21	10	20	50	60	10	30⑤
	100	HNF363JW	25	15	40	75	100	20	50⑤
	200	HNF364JW	51	15	60	125	150	40	50
	400	HNF365JWA	75	15	125	250	350	50	—
	600	HNF366JWA	77	15	200	400	500	50	—
	800	HNF367JW	295	15	250	500	500	50	—
	1200	HNF368JW	310	15	250	500	500	50	—
3-Pole, 3-Wire Fusible, Type 4X Stainless Steel④⑥								**600 Volt AC / 250 Volt DC①**	
	30	HF361SW	17	3	7½	15	20	5	—
	60	HF362SW	23	10	15	30	50	10	30⑤
	100	HF363SW	28	15	30	60	75	20	50⑤
	200	HF364SW	55	—	60	125	150	40	50
	400	HF365SWA	75	15	125	250	350	50	—
	600	HF366SW	98	—	—	400	500	50	—
	800	HF367SW	365	—	—	500	500	50	—
	1200	HF368SW	388	—	—	500	500	50	—
3-Pole, 3-Wire Non-Fusible, Type 4X Stainless Steel④⑥								**600 Volt AC / 250 Volt DC①**	
	30	HNF361SW	15	3	10	20	30	5	—
	60	HNF362SW	23	10	20	50	60	10	30⑤
	100	HNF363SW	27	15	40	75	100	20	50⑤
	200	HNF364SW	54	15	60	125	150	40	50
	400	HNF365SWA	75	15	125	250	350	50	—
	800	HNF367SW	295	15	250	500	500	50	—
	1200	HNF368SW	310	15	250	500	500	50	—

① 200A switches are also rated 600V DC.
② Maximum HP ratings listed apply only when time delay fuses are used.
③ Also rated 3S/3R for outdoor use.
④ All switches are suitable for use as service entrance equipment.
⑤ 600V DC and 600V DC horsepower rating shown requires (2) poles to be connected in series.
⑥ 304 grade stainless steel. For switches with enclosures constructed from 316 grade stainless steel, substitute "SS" in catalog number for "S." 316 available for up through 600A.

Description

The new Siemens Series-A Elevator Control Switch (ECS) is designed to interrupt incoming AC power upon receiving a signal from a Fire Alarm Control Panel (FACP) for both cable and hydraulic elevators.

Siemens' new Series-A ECS retains the same functionality as the legacy ECS but with notable improvements. Upgraded components allow for easier maintenance, reduced configuration complexity, and better lead times. The 3VA switch with shunt trip capability, is fully field serviceable and can utilize 3VA accessories. The standard 3-pole fire alarm voltage monitoring relay has been made standard, further simplifying the ECS configuration.

The Elevator Control Switch comes completely assembled for quick installation, eliminating the labor and time needed to assemble individual components. The smart numbering system helps ensure the switch includes the correct components and eliminates the need for ordering accessories.

Siemens ECS supports fused systems requiring selective coordination code compliance. The ECS achieves the code requirement by utilizing Class J fuses which coordinate with any upstream fuse by simply using a 2:1 line-side to load-side fuse ratio.

Agency information

- UL 98 Enclosed and Dead Front Switch



Catalog number system

The following catalog numbering system defines an Elevator Control Switch construction. Note that 3 pole fire alarm voltage monitoring relays and auxiliary contacts come standard with the series-A switch.

ECS	1	T2	R2	G	J	N	C	A

Elevator Control Switches

Ampere rating

1 = 30 A
2 = 60 A
3 = 100 A
4 = 200 A
5 = 400A

Control Transformer①

T2 = 208 V
T3 = 240 V
T1 = 480 V
T4 = 600 V

Fire Safety Interface Relay (3PDT, 10 A, 120 V)

R2 = 24 Vdc Coil
R1 = 120 Vac Coil

Pilot Light ON

G = Green
R = Red
W = White

Enclosure options (NEMA 1 Standard with no suffix designation required)③

J = NEMA 1/3R/12

Neutral Lug

N = Isolated Full Capacity

Surge Protection

C = Integrated surge protection device②

Series A

① 100 VA with Primary and Secondary fusing (120 V Secondary)
② For information on Siemens TPS4 03 protection device refer to product literature or Speedfax.
③ Only 30-100A switches have a NEMA 1 enclosure variant. Utilize "J" suffix if for NEMA 1, 3R, and 12 for 200A and 400A switches.

Standard features

- 30-400 A, 600 Vac, 3-phase fused power switch
- 200 kA RMS assembly short-circuit current rating
- Shunt trip 120 V
- Control power terminal block
- Class J fuse mounting only (Class J fuses not included)
- Key to test switch
- Pilot light – "ON"
- Mechanically interlocked auxiliary contact for hydraulic elevators with battery backup (5 A, 120 Vac rated)
- Handle designed for hook stick operation
- OSHPD Special Seismic Certification Preapproval (OSP)

Configurable standard features

- Control power transformer with fuses and blocks
- Fire safety interface relay
- Fire Alarm Voltage Monitoring Relay (to monitor Shunt Trip Voltage)
- NEMA 1 and 3R/12 enclosures available

Optional features

- Isolated neutral lug①
- Integrated surge protection device (TPS4 03 with current rating of 50kA per phase). Externally viewable though window in door
- Upgraded surge protection (130Ka TPS4 09) can be field installed with an accessory kit
- Field installed compression and copper lugs available up to 200A

Contact closure feature

The contact closure allows for a battery lowering/door opening system. The additional contact offers support for the states of Arizona, Oregon, and Texas requirements to prevent "nuisance" fire alarms by over-riding the "Control Power not Available" signal when the ECS is manually (intentionally) turned off, and distinctive signaling for ON-OFF-TRIPPED conditions.

Shunt-trip operation

The disconnect means is a shunt-trip operated switch. The control power source for the shunt-trip operator is a 120 Vac supply originating in the Siemens Elevator Control switch. Current to the shunt-trip device is switched by an isolation relay, which is in turn controlled by the FACP.

The control signal may be either 24 Vdc from the FACP or a "dry" contact closure in the FACP. In the case of a "dry" contact closure, the sensing voltage is 120 Vac originating in the Siemens Elevator Control switch.

A key test switch is included for testing the shunt-trip circuit.

Supervisory indication

The fire alarm voltage monitoring relay can be specified to monitor the 120 Vac control power source in the Siemens Elevator Control switch. This relay is used to provide supervisory indication of "Control Power Available" as required by NFPA 72 Section 6.15.4.4.

UL_A / NEC_B Listed Horsepower Ratings

	30A		60A		100A		200A		400A	
Voltage / Poles	**Std[2]**	**Max[1]**	**Std[2]**	**Max[1]**	**Std[2]**	**Max[1]**	**Std[2]**	**Max[1]**	**Std[2]**	**Max[1]**
208VAC / 3 $Pole_B$	2	5	5	10	10	15	20	40	40	75
240VAC / 3 $Pole_A$	2	7 1/2	7 1/2	15	15	30	25	60	50	75
480VAC / 3 $Pole_A$	5	15	15	30	25	60	50	125	100	150
600VAC / 3 $Pole_A$	7 1/2	20	15	50	30	75	60	150	125	200

1 = Max HP w/time delay Class J Fuses
2 = Max HP w/non-time delay Class J Fuses

① The factory installed optional neutral lug is 100% for sizes 30 – 200A and 200% for size 400A. The field installed 200% neutral lug accessory is available for only sizes 200 and 400A.

Reliable protection with remote control capability.

Description

This Heavy-Duty Shunt Trip Fusible Safety Switch combines the robust overcurrent and short circuit protection of a traditional fusible safety switch with the advanced functionality of the Siemens 3VA molded case switch (MCS) with remote controlled shunt trip. It is designed for critical applications where safety, speed, and control are paramount. In addition to interrupting excessive current flow due to overloads and short circuits, it ensures rapid power disconnection in response to a remote signal. It is ideal for emergency shutdown systems, fire safety integration, and automated control environments.

The steadfast protection of the Heavy-Duty Shunt Trip Fusible Safety Switch can be further enhanced with optional surge protection.

The Surge Protection Device (SPD) adds an additional layer of protection further reducing downtime and maintenance costs. It accomplishes this by preventing failures due to external surges, lightning strikes, and utility switching events. This SPD is designed to intercept and neutralize these threats before they reach your critical infrastructure.



Engineered for demanding industrial and commercial environments, this integrated solution offers reliable circuit protection and rapid power disconnection. Whether you're upgrading existing infrastructure or designing a new system, this solution delivers unmatched protection and value in one compact, easy-to-install unit.

Catalog number system

The following catalog numbering system defines a Heavy-Duty Shunt Trip Safety Switch construction.

STF36	1	2	T	C	1	N	J

Fusible Shunt Trip Switch 600 VAC Max

Ampere rating
1 = 30 A
2 = 60 A
3 = 100 A
4 = 200 A
5 = 400A

Shunt Trip Coil
1 = 12VDC①
2 = 24V DC/AC③
3 = 120 VAC

Integrated Control Power Transformer (CPT)③
X = Not included
T = Included and pre-wired to power the shunt trip

Integrated Surge Protection Device (SPD)
X = Not included
C = Included

System Voltage②
X = Not required if neither CPT or SPD is selected
1 = 480
2 = 208
3 = 240
4 = 600

Neutral
(blank) = Not included
N = Included

Enclosure
J = NEMA Type 1/3R/12

① 12 VDC control voltage is externally provided. Integrated CPT does not apply.
② System voltage must be selected if either CPT or surge protection is selected. Leave system voltage blank if neither CPT or surge protection is selected.

③ If both 24V DC/AC coil and CPT is selected, the CPT secondary will be 24V AC. If 24V DC/AC coil is selected without CPT, 24V DC control voltage must be externally provided.
④ The factory installed optional neutral lug is 100% for sizes 30 – 200A and 200% for size 400A. The field installed 200% neutral lug accessory is available for only sizes 200 and 400A.

Typical applications

- Industrial Facilities
- Commercial Buildings
- Data Centers
- Healthcare Institutions
- Educational Campuses
- Utility Infrastructure

Standard features

- 30-400 A, 600 VAC, 3-phase
- MCS with integrated shunt trip
- Class J fuse base (fuses not included)
- Control circuit terminal strip
- Ground lug
- NEMA Type 1/3R/12 enclosure
- 200 kA RMS assembly short-circuit current rating

Optional features

- Control power transformer
- Integrated surge protection device (TPS4 03) rated at 50kA per phase, externally visible through a window in the enclosure door
- Isolated 100% neutral lug①

Accessories

- Alternate lugs and copper lugs for MCS and fuse base
- Isolated 200% neutral lug①
- Isolated ground lug
- Auxiliary switches, alarm switches, & undervoltage release for MCS
- Line side terminal cover for MCS
- 3SU1 Pilot devices

Standards and certifications

- UL 98 Enclosed and Dead Front Switch
- UL Listed
- UL Listed as Service Entrance Equipment

UL_A / NEC_B Listed Horsepower Ratings

	30A		60A		100A		200A		400A	
Voltage / Poles	Std[2]	Max[1]	Std[2]	Max[1]	Std[2]	Max[1]	Std[2]	Max[1]	Std[2]	Max[1]
208VAC / 3 $Pole_B$	2	5	5	10	10	15	20	40	40	75
240VAC / 3 $Pole_A$	2	7 1/2	7 1/2	15	15	30	25	60	50	75
480VAC / 3 $Pole_A$	5	15	15	30	25	60	50	125	100	150
600VAC / 3 $Pole_A$	7 1/2	20	15	50	30	75	60	150	125	200

1 = Max HP w/time delay Class J Fuses
2 = Max HP w/non-time delay Class J Fuses

① The factory installed optional neutral lug is 100% for sizes 30 – 200A and 200% for size 400A. The field installed 200% neutral lug accessory is available for only sizes 200 and 400A.

Two layers of protection. One seamless solution.

Overview

This Heavy-Duty Fusible Safety Switch combines the robust overcurrent and short circuit protection of a traditional fusible safety switch with the added layer of surge protection. In addition to interrupting excessive current flow due to overloads and short circuits, it mitigates failures due to external surges, lightning strikes, and utility switching events. The surge protection device (SPD) is designed to intercept and neutralize these destructive surges before they reach your critical infrastructure.

Engineered for demanding industrial and commercial environments, this integrated solution offers reliable circuit protection and advanced surge mitigation. Whether you're upgrading existing infrastructure or designing a new system, this solution delivers unmatched protection and value in one compact, easy-to-install unit.



Catalog number system

The following catalog numbering system defines a Heavy-Duty Switch with Surge Protection construction.

HF	1	6	1	C	N	J

Heavy Duty Fusible Switch

Ampere rating

1 = 30 A
2 = 60 A
3 = 100 A
4 = 200 A
5 = 400A

Maximum Voltage 600 VAC

System Voltage

1 = 480
2 = 208
3 = 240
4 = 600

Integrated Surge Protection

Neutral

(blank) = Not included
N = Included

Enclosure

J = NEMA Type 1/3R/12

Typical applications

- Industrial Facilities
- Commercial Buildings
- Data Centers
- Healthcare Institutions
- Educational Campuses
- Utility Infrastructure

Standard features

- 30-400 A, 600 VAC, 3-phase
- Molded case switch (MCS)
- Class J fuse base (fuses not included)
- Integrated surge protection device (TPS4 03) with current rating of 50kA per phase. Externally viewable though window in enclosure door
- Control circuit terminal strip
- Ground lug
- NEMA Type 1/3R/12 enclosure
- 200 kA RMS assembly short-circuit current rating

Optional features

- Isolated 100% neutral lug①

Accessories

- Alternate lugs and copper lugs for MCS and fuse base
- Isolated 200% neutral lug①
- Isolated ground lug
- Shunt trip for MCS
- Auxiliary switches, alarm switches, & undervoltage release for MCS
- Line side terminal cover for MCS
- 3SU1 Pilot devices
- TPS4 09 SPD with increased surge current rating of 130kA per phase

Standards and certifications

- UL 98 Enclosed and Dead Front Switch
- UL Listed

UL_A / NEC_B Listed Horsepower Ratings

	30A		60A		100A		200A		400A	
Voltage / Poles	Std[2]	Max[1]	Std[2]	Max[1]	Std[2]	Max[1]	Std[2]	Max[1]	Std[2]	Max[1]
208VAC / 3 $Pole_B$	2	5	5	10	10	15	20	40	40	75
240VAC / 3 $Pole_A$	2	7 1/2	7 1/2	15	15	30	25	60	50	75
480VAC / 3 $Pole_A$	5	15	15	30	25	60	50	125	100	150
600VAC / 3 $Pole_A$	7 1/2	20	15	50	30	75	60	150	125	200

1 = Max HP w/time delay Class J Fuses
2 = Max HP w/non-time delay Class J Fuses

① The factory installed optional neutral lug is 100% for sizes 30 – 200A and 200% for size 400A. The field installed 200% neutral lug accessory is available for only sizes 200 and 400A.

Application

4 & 6-pole Switches are commonly used as a disconnecting means for two-speed, two-winding motors. Fused switches provide both over current and short circuit protection. Non-fusible switches normally provide a local disconnection means for two-speed motors which are remote from their motor controller. 4-pole switches are also used in 3-phase, 4-wire circuits when a switching neutral is required. All 4 & 6-pole switches are service entrance rated.

Description

4 & 6-pole switches are available in 30-200A ratings and in both fusible and non-fusible versions. 4-pole switches are supplied with either Type 1 or Type12/3R enclosures.
6-pole switches are available with either Type 12/3R or Type 4X stainless steel enclosures.

Standards

- UL & CUL listed under file #E4776
- Meets UL98 for enclosed switches
- 4 & 6-Pole switches are suitable for use as service entrance
- Meets NEMA Standard KS-1 for enclosed switches
- Meets NEC wire bending space requirements

Features

- Visible blade, double break switching action
- Highly visible ON/OFF indication
- Defeatable dual cover interlock
- Padlock option in OFF position
- All copper current carrying parts①
- Tangenital knockouts (Type 1, 4-pole switches)



HNF662J

4-Pole Type VBII Switches①②

System	Amp Rating	Indoor Type 1 Catalog Number	Indoor Type 1 Ship Wt. (lbs.)	Type 12/3R Industrial⑤ Catalog Number	Type 12/3R Industrial⑤ Ship Wt. (lbs.)	Horsepower Ratings③ 240V, 2Ø, 4W Std.	240V, 2Ø, 4W Max.	240V 3Ø Std.	240V 3Ø Max.	480V, 3Ø Std.	480V, 3Ø Max.	600V, 3Ø Std.	600V, 3Ø Max.	250V DC
Fusible 600 Volt AC, 250 Volt DC — 4-Pole, 4 Fuse④														
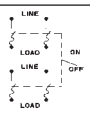	30	**HF461**	36	**HF461J**	36	3	10	3	7½	5	15	7½	20	5
	60	**HF462**	40	**HF462J**	40	7½	20	7½	15	15	30	15	50	10
	100	**HF463**	43	**HF463J**	43	15	30	15	30	25	60	30	75	20
	200	**HF464■**	88	**HF464J■**	88	25	50	25	60	50	125	60	150	40
Non-fusible 600 Volt AC, 250 Volt DC — 4-Pole														
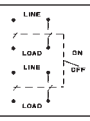	30	**HNF461**	32	**HNF461J**	32	—	10	—	10	—	20	—	30	5
	60	**HNF462**	34	**HNF462J**	34	—	20	—	20	—	50	—	60	10
	100	**HNF463■**	36	**HNF463J■**	36	—	30	—	40	—	75	—	100	20
	200	**HNF464■**	78	**HNF464J■**	78	—	50	—	60	—	125	—	150	4

6-Pole Type VBII Switches①②⑤

System	Amp Rating	Type 12/3R Industrial Catalog Number	Type 12/3R Industrial Ship Wt. (lbs.)	Type 4X Stainless Steel Catalog Number	Type 4X Stainless Steel Ship Wt. (lbs.)	Horsepower Ratings③ 240V 3Ø Std.	240V 3Ø Max.	480V, 3Ø Std.	480V, 3Ø Max.	600V, 3Ø Std.	600V, 3Ø Max.	250V DC
Fusible 600 Volt AC, 250 Volt DC — 6-Pole, 6 Fuse④												
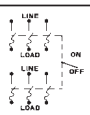	30	**HF661J**	37	**HF661S■**	37	3	7½	5	15	7½	20	5
	60	**HF662J**	41	**HF662S■**	41	7½	15	15	30	15	50	10
	100	**HF663J■**	44	**HF663S■**	44	15	30	25	60	30	75	20
	200	**HF664J■**	90	**HF664S■**	90	25	60	50	125	60	150	40
Non-fusible 600 Volt AC, 250 Volt DC — 6-Pole												
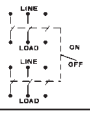	30	**HNF661J**	33	**HNF661S**	33	—	10	—	20	—	30	5
	60	**HNF662J**	35	**HNF662S**	35	—	20	—	50	—	60	10
	100	**HNF663J**	37	**HNF663S**	37	—	40	—	75	—	100	20
	200	**HNF664J**	80	**HNF664S■**	80	—	60	—	125	—	150	40

■ Built to order. Allow 3-5 weeks for delivery.

① Lugs are aluminum alloy as standard. Optional copper body lugs are available.

② All 4 & 6-pole VBII switches are suitable for use as service equipment when a neutral is installed or equipment ground kit is properly connected.

③ Dual horsepower ratings: Std. – applies when non-time-delay fuses are installed. Max. – applies when time delay fuses are installed.

④ Fusible switches accept Class H Fuses as the standard. Class R & J fuses can also be installed and increase the rating from 10,000 to 200,000 AIC. For Class J, the load base is moved upward. For Class R fuses, rejection kits are required.

⑤ Supplied with factory installed ground lugs.

Application

Receptacle Safety Switches provide cord connection protection of heavy-duty portable equipment (welders, infrared ovens, batch feeders, portable conveyors, assembly line fixtures and tools, refrigerator trucks, etc.) under load or fault conditions.

Standards

All receptacle switches are UL listed under file #E4776. Those with a viewing window are also CSA certified under file #1079316.

Description①②

Type 12 and 4/4X Receptacle Safety Switches are available with 3-phase, 4-wire grounded type Crouse-Hinds Arkite™ 2 or Pyle-National receptacle, pre-wired and mounted with interlock linkage to the switch mechanism. Insertion or removal of the plug is prevented by the interlock linkage while the switch is in the "ON" position. Receptacle prevents operation of switch if incorrect plug is inserted.



HF362JCH

Crouse-Hinds Interlocked Receptacle Switches

Ampere Rating④	Type 12⑤ Catalog Number	Type 4/4X⑥ Catalog Number	Shipping Wt. (lbs.) Std. Pkg.	Accepts Crouse-Hinds Arktitea Plug Catalog Number
240V Fusible, 3-Pole, 3-Wire				
30	**HF321JCH**	—	23	APJ3485 & NPJ3485
60	**HF322JCH**	—	30	APJ6485 & NPJ6485
100	**HF323JCH**	**HF323SCH▲**	36	APJ10487 & NPJ10487
600V Fusible, 3-Pole, 3-Wire				
30	**HF361JCH**	**HF361SCH**	24	APJ3485 & NPJ3485
60	**HF362JCH**	**HF362SCH**	30	APJ6485 & NPJ6485
100	**HF363JCH**	**HF363SCH▲**	36	APJ10487 & NPJ10487
600V Non-Fusible, 3-Pole, 3-Wire				
30	**HNF361JCH▲**	**HNF361SCH▲**	22	APJ3485 & NPJ3485
60	**HNF362JCH**	**HNF362SCH**	29	APJ6485 & NPJ6485
100	**HNF363JCH▲**	**HNF363SCH▲**	35	APJ10487 & NPJ10487
600V Fusible, 3-Pole, 3-Wire with Viewing Window				
30	**HF361JCHW▲**	**HF361SCHW▲**	24	APJ3485 & NPJ3485
60	**HF362JCHW**	**HF362SCHW**	30	APJ6485 & NPJ6485
100	**HF363JCHW▲**	**HF363SCHW▲**	36	APJ10487 & NPJ10487
600V Non-Fusible, 3-Pole, 3-Wire with Viewing Window				
30	**HNF361JCHW▲**	**HNF361SCHW▲**	22	APJ3485 & NPJ3485
60	**HNF362JCHW**	**HNF362SCHW▲**	29	APJ6485 & NPJ6485
100	**HNF363JCHW▲**	**HNF363SCHW▲**	35	APJ10487 & NPJ10487

Pyle-National Interlocked Receptacle Switches 3-Poles Fusible and Non-Fusible

Ampere Rating		Voltage Rating	Type 12 Catalog Number⑤	Shipping Wt. (lbs.) Std. Pkg.	Accepts Pyle-National QuelArc™②③ Plugs
Switch	Receptacle				Plug Catalog Number
30	30	600 (F)	**HF361JPN▲**	23	**JPD-83046**
		600 (N-F)	**HNF361JPN**	21	
60	60	600 (F)	**HF362JPN▲**	28	**JPD-116046**
		600 (N-F)	**HNF362JPN**	27	

▲ Built to order. Allow 6–8 weeks for delivery.

① Arktite™ is a registered trademark of the Crouse-Hinds Company. Plugs are not sold or supplied by Siemens.

② Indicates plug with maximum diameter cable bushing.

③ QuelArc™ is a registered trademark of the Pyle-National Company.

④ Ampere rating of both switch and receptacle.

⑤ Also rated Type 3R/3S.

⑥ Enclosure is constructed of Type 304 stainless steel.

Application

Siemens Non-metallic switches provide a superior level of corrosion resistance to assure trouble free performance in the most severe conditions. Our non-metallic enclosures are constructed from fiberglass reinforced polyester and are extremely resistant to a wide range of corrosive atmospheres. They allow a wide range of operating temperatures and their insulating properties virtually eliminate problems caused by internal condensation.

Description

30-200A, 600V Max, fusible and non-fusible switches are available in non-metallic enclosures. All are supplied with factory installed ground bars as standard.



Type 4/4X Non-Metallic

Ampere Rating	Catalog Number	Ship Weight Std. pkg. (lbs.)	Horsepower Rating—3-Phase						250 Volts DC	600 Volts DC
			240 Volt AC		480 Volt AC		600 Volt AC			
			Std.	Max.	Std.	Max.	Std.	Max.		
3-Pole, 4-Wire, 240 Volt Fusible, Type 4X⑤										
30	**HF321NX**	21	3	7½	—	—	—	—	5	—
60	**HF322NX▲**	22	7½	15	—	—	—	—	10	—
3-Pole, 4-Wire, 600 Volt AC Fusible, Type 4X②③⑤										
30	**HF361NX**	21	3	7½	5	15	7½	20	5	15④
60	**HF362NX**	22	7½	15	15	30	15	50	10	30④
100	**HF363NX▲①**	39	15	30	25	60	30	75	20	50④
200	**HF364NX▲①**	83	25	60	50	125	60	150	40	50
3-Pole, 3-Wire, 600 AC Volt Non-Fusible,① Type 4X②③										
30	**HNF361X**	20	—	7½	—	20	—	30	5	15④
60	**HNF362X**	20	—	15	—	50	—	60	10	30④
100	**HNF363X▲**	38	—	30	—	75	—	100	20	50④
200	**HNF364X▲**	81	—	60	—	125	—	150	40	50

▲ Built to order. Allow 6–8 weeks for delivery.

① Also used for 240 volt applications.

② Add "L" to end of catalog number for switches less line & load lugs with mounting hardware for crimp type or copper body lugs.

③ 200A switches are also rated 600V DC max.

④ 600V DC voltage and horsepower rating shown requires (2) poles to be connected in series.

⑤ Supplied with factory installed neutral.

Application

Solar disconnect switches are designed to be used in the DC portion of photovoltaic power generation circuits. They incorporate powerful magnets within the switch line base which work in combination with a double break switching action to quickly dissipate the very hot arc that is generated when a 600V DC circuit is opened under load. These circuits are defined by article 690 of the NEC which requires the grounded conductor to be at ground potential at all times and therefore cannot be switched.

Description

30-200A switches are available in both Type 1 and 3R enclosures and in both fusible and non–fusible versions. They are provided with an additional door mounted warning label as required by the NEC and are supplied with a factory installed equipment ground bar. They are built to UL98 requirements but are UL listed in file number E335018 as UL1741 photovoltaic disconnect switches. They are 3 pole switches that are approved to switch 3 separate 600V DC circuits (one per pole). The design incorporates many of the standard VBII switch features including a rolled out enclosure front flange, a large metal operating handle, oversized line and load lugs and large wire gutters. 1000VDC photovoltaic switches are UL98B listed for solar applications and comply with article 690 of the NEC. The new 400-600Amp switches are also UL98B listed at 600VDC and come in NEMA Type 3R.

Solar Photovoltaic Enclosed Disconnect Switches

Ampere Rating	Indoor – Type 1 Catalog Number	Indoor – Type 1 Ship Wt* Std. Pkg.	Outdoor – Type 3R Catalog Number	Outdoor – Type 3R Ship Wt* Std. Pkg.	Rated Isc Per NEC Article 690
Negative Ground 3 Pole 3 Wire Fusible 600Volt DC					
30	HF361PV	14	HF361RPV	15	19.2 A
60	HF362PV	20	HF362RPV	21	38.4 A
100	HF363PV▲	25	HF363RPV	26	64.0 A
200	HF364PV▲	49	HF364RPV	50	128.0 A
Negative Ground 3 Pole 3 Wire Non-Fusible 600Volt DC					
30	HNF361PV	12	HNF361RPV	13	24.0 A
60	HNF362PV	19	HNF362RPV	20	48.0 A
100	HNF363PV▲	24	HNF363RPV	25	80.0 A
200	HNF364PV▲	47	HNF364RPV	48	160.0 A
Positive and Negative Ground, 1 Pole, Fusible 1000 Volt DC					
200	HF1104NPV▲	52	HF1104NRPV▲	53	128.0A
Positive and Negative Ground, 1 Pole, Non-Fusible 1000 Volt DC					
200	HNF1104NPV▲	50	HNF1104NRPV▲	51	160.0A
Positive Ground 3 Pole 3 Wire Fusible 600Volt DC					
30	HF361PVPG	14	HF361RPVPG	15	19.2 A
60	HF362PVPG▲	20	HF362RPVPG	21	38.4 A
100	HF363PVPG▲	25	HF363RPVPG▲	26	64.0 A
200	HF364PVPG▲	49	HF364RPVPG▲	50	128.0 A
Positive Ground 3 Pole 3 Wire Non-Fusible 600Volt DC					
30	HNF361PVPG	12	HNF361RPVPG	13	24.0 A
60	HNF362PVPG▲	19	HNF362RPVPG	20	48.0 A
100	HNF363PVPG▲	24	HNF363RPVPG▲	25	80.0 A
200	HNF364PVPG▲	47	HNF364RPVPG▲	48	160.0 A

Positive and Negative Ground, 2 Wire, 600Volt DC, Type 3R

Amperage Rating	No. Poles	Fuse Type	Catalog Number	Ship Wt* Std. Pkg	Rated Isc Per NEC Article 690
400A	1	Fusible	HF165NRPV▲	165	256A
400A	1	Non-fusible	HNF165NRPV▲	127	256A
600A	1	Fusible	HF166NRPV▲	167	384A
600A	1	Non-fusible	HNF166NRPV▲	129	384A



HF361PV



HNF361RPV



HF362RPV

▲ Built to order. Allow 6–8 weeks for delivery.

* In pounds (lbs)

Note: All disconnects are rated at 10,000 AIC per UL requirements when used with or protected by Class K, J or R fuses rated at 600VDC.

Description

Double throw switches are intended to transfer loads from one power source to another. All 2 & 3-pole double throw switches are suitable for use as service equipment including non-fusible versions when used in combination with a UL listed circuit breaker or fusible switch. All are UL Listed and both horsepower and load break rated. Switches are rated for use on systems up to 10,000A when protected with Class H fuses or 100,000A when protected with Class R or Class T fuses②. They can also be used to connect a single source of power to either of two loads. In this application it is necessary to field modify fusible switches so that the fuses are on the load side of the switching mechanism.

A cover interlock is provided on all ampere ratings. The operating handle may be padlocked in the off position.

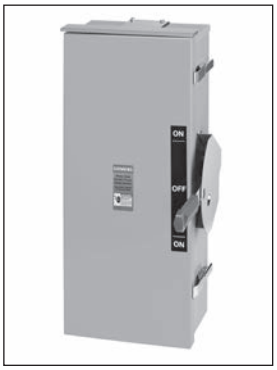

Fuse Capabilities of Fusible DTF Switches

Amp Rating	Fuse Type			
	H	R	T	J
30 & 60A, 240V	Std	Yes (kit)	No	No
30 & 60A, 600V	Std	Yes (kit)	No	Yes③
100 & 200A	Std	Yes (kit)	Yes (kit)	Yes③
400 & 600A (DTF)	No	No	Yes③	Std

Double Throw Switches

System	Voltage	Number of Poles	Amps	Type 1 — Indoor Catalog Number	Type 3R — Outdoor① Catalog Number	Type 12/3R — Industrial Catalog Number	Type 4X — Stainless Steel Catalog Number
Heavy Duty Fusible (30-200A) with Class H fuse spacings —Less Neutral ②							
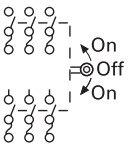	240 Volt AC or 250 Volt DC	2	200	DTF224▲	DTF224R	—	—
		3	30	DTF321	DTF321R▲	—	—
			60	DTF322	DTF322R▲	—	—
			100	DTF323▲	DTF323R	—	—
			200	DTF324	DTF324R	—	—
			400	DTF325	FR325DTK⑥▲	—	—
			600	DTF326▲	FR326DTK④▲	—	—
	600 Volt AC, 250 Volt DC	3	30	DTF361	—	—	—
			60	DTF362▲	—	—	—
			100	DTF363	DTF363R	—	F353SSDTK⑥▲
			200	DTF364	DTF364R	—	F354SSDTK⑥▲
			400	DTF365	FR355DTK④▲	—	F355SSDTK④▲
Heavy Duty Non-Fusible —Less Neutral ②							
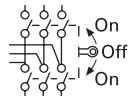	240 Volt AC or 250 Volt DC	2	30	DTNF221	—	—	—
			60	DTNF222	—	—	—
			100	DTNF223	—	—	—
			200	DTNF224	DTNF224R	—	—
			400	DTNF225	DTNF225R	—	—
		3	30	DTNF321	—	—	—
			60	DTNF322	—	—	—
			100	DTNF323	DTNF323R	—	—
			200	DTNF324	DTNF324R	—	—
			400	DTNF325	—	—	—
			600	DTNF326	—	—	—
			800	DTNF327▲	—	—	—
	600 Volt AC, or 250 Volt DC	3	30	DTNF361	DTNF361R	DTNF361J	DTNF361S
			60	DTNF362	DTNF362R	DTNF362J	DTNF362S
			100	DTNF363	DTNF363R	DTNF363J	DTNF363S
			200	DTNF364	DTNF364R	DTNF364J▲	DTNF364S
			400	DTNF365	DTNF365R	NF355HDTK	NF355SSDTK
			600	DTNF366	DTNF366R	—	—
			800	DTNF367	DTNF367R	—	—
			1200	DTNF368▲	DTNF368R	—	—
		4⑤	30	—	NFR451DTK▲	—	—
			60	—	NFR452DTK▲	—	—
			100	—	NFR453DTK▲	—	—
			200	NF454DTK	NFR454DTK▲	—	NF454SSDTK▲
			400	NF455DTK▲	NFR455DTK▲	—	—
			600	NF456DTK▲	NFR456DTK▲	—	—
			800	NF457DTK▲	NFR457DTK▲	—	—
General Duty Non-Fusible				Type 3R — Outdoor① Less Neutral	Type 3R — Outdoor① With Neutral	Type 3R — Outdoor General Duty With Neutral ⑦	
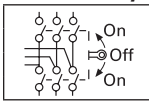	240 Volt AC	2	100	DTGNF223R	DTGNF223NR	DTLNF213NR	—
			200	DTGNF224R	DTGNF224NR	—	—
		3	100	DTGNF323R	DTGNF323NR	—	—
			200	DTGNF324R	DTGNF324NR	—	—

▲ Built to order. Allow 3–4 weeks for delivery.

① Use HS Type hubs for 30–200A switches. 400A and larger switches do not have hub provisions.

② All Heavy Duty double throw switches with a catalog number starting with "DT" are rated 200,000 AIC max. when protected by Class R, J or T fuses. Fuse ampere rating must not exceed switch ampere rating.

③ Move load base.

④ Will accept class T Fuses only.

⑤ 4-pole switches are not approved for service entrance.

⑥ Will accept class H fuses only.

⑦ General duty Stand-by Power Panel catalog number DTLNF213NR contains (2) 100A, 2P circuit breakers rated 120/240V AC & 10,000 AIC.

Accessories, Lug Data and Horsepower Ratings

Accessories – 2 and 3-Pole Switches Type "DT" Only①

Description		Catalog Number
Neutral Kits	30A 60 & 100A 200A 400 & 600A 800 & 1200A	HNC612 HN263 HNC264 HN678 HND678
Equipment Ground Kit	30-200A (2) #14-4 AWG 400 & 600A (4) #14-2/0 800-1200A (8) #6-350 Kcmil	HG61234 HG656 HG678
Auxiliary Contacts (HD only) (two required per switch)④	30-200A with (1) NO & (1) NC contact 30-200A with (2) NO & (2) NC contacts 400-1200A with (1) NO & (1) NC contact 400-1200A with (2) NO & (2) NC contacts	HA161234 HA261234 HA165678 HA265678
Class R Fuse Clip Kits (two required per switch)	30A, 240V Kit 30A, 600V Kit/60A, 240V Kit 60A, 600V Kit 100A Kit 200A Kit	HR21 HR612 HR62 HR63 HR64
Class T Fuse Adapter Kits (two required per pole)	100A, 240V Kit 100A, 600V Kit 200A, 240V Kit 200A, 600V Kit	HT23 HT63 HT24 HT64
Type 3R Hubs (30-200A)	For ¾" Conduit For 1" Conduit For 1 ¼" Conduit For 1 ½" Conduit For 2" Conduit For 2 ½" Conduit	ECHS075 ECHS100 ECHS125 ECHS150 ECHS200 ECHS250

Accessories – 4-Pole and Type "F" & "NF" 3-Pole Switches Only②

Description		Catalog Number
Auxiliary Switch (two required per switch)	30-800A (1) NO, (1) NC④ (2) NO, (2) NC④	DS200EK1 DS200EK2
Ground Lug Kit③	30-60-100A 200A 400-600-800A	DS100GK DS200GK DS468GK
Hubs	30-60-100A Use Type HR Hubs 200-400A Use Type SSH 4, 4X Hubs 600-800A Use Type SSH 4, 4X Hubs	
Neutrals (3-pole only)	30-60-100A 200A 400 & 600A Fusible 400A 3P Non-Fusible	DT100NK DT200NK DS800NK DT600NK

Maximum Horsepower Ratings

Fused

Ampere Rating	1-Phase AC	3-Phase AC			250V DC
	240V	240V	480V	600V	
30	3	7½	15	20	5
60	10	15	30	50	10
100	15	30	60	75	20
200	15	60	125	150	40
400	—	125	125	125	50
600	—	125	—	—	50

Non-Fused

30	5	10	20	30	5
60	10	20	50	60	10
100	15	40	75	100	20
200	15	60	125	150	40
400-800	—	125	250	350	50

Wire Ranges (Line, Load and Neutral) per NEC Requirements

30-200A – 2, 3 & 4-Pole Switches

Switch Ampere Rating	Wire Range (Cu/Al) New VBII Design Line, Load and Neutral
30	(1) #14–6
60	(1) #14–2
100	(1) #14–1/0 AWG
100	(1) #14–1/0 AWG
200	(1) #6–250 kcmil

400-1200A – 2 & 3-Pole Switches

Switch Ampere Rating	Wire Range (Cu/Al) New VBII Design Line, Load and Neutral
400	(1) 1/0 AWG–750 kcmil or (2) 1/0 AWG–250 kcmil
600	(2) 1/0 AWG–500 kcmil
800	(2) 1/0 AWG–750 kcmil or (3) 1/0 AWG–500 kcmil
1200	(3) 1/0 AWG–600 kcmil or (4) 1/0 AWG–500 kcmil

400-800A – 4-Pole switches

Switch Ampere Rating	Wire Range (Cu/Al) New VBII Design Line, Load and Neutral
400	(2) 1/0 AWG–300 kcmil or (1) 1/0 AWG–750 kcmil
600	(2) 250-500 Kcmil
800	(3) 250-500 Kcmil

Replacement Parts – 2 and 3-Pole Switches Only①

Description		Catalog Number
Type 1, 3R & 12 Replacement Handle	30-200A	HHD61234
Type 4X Replacement Handle	30-200A	HHD61234S
Replacement Handle	400-1200A	HHD656

Barrier Kit – Double Throw

Description		Catalog Number
Barrier Kits	60-100A	HSK623DT
	100A	HSK223DT
	200A	HSK64DT
	400-600A	HSK656DT
	800-1200A	HSK678DT

▲ Built to order. Allow 6–8 weeks for delivery.

① For "DT" VBII Type switches only.

② Also for fusible stainless & 400A Type 12 & 4x switches.

③ The following ground lugs are provided as standard in 200A and larger switches 200-(1) #14-4 Cu/Al 400-800A-(3) #6-250MCM Cu/Al.

④ One aux. required for normal and one required for emergency switch line base.



HR612

Class R Fuse Clip Kits

All General Duty and Heavy Duty Switches are field convertible to accept Class R Fuse Clip Kits. The kits prevent the installation of Class H and K fuses (one kit required per 3-pole switch).

Class R Fuse Clip Kits

Catalog Number	Description
HR21A	30A, 240V Kit (GD only)
HR21	30A, 240V Kit (HD only)
HR612	30A, 600V Kit
HR22A	60A 240V Kit (GD only)
HR62	60A, 600V Kit
HR63	100A Kit
HR64	200A Kit
HR656A	400A Kit
HR656A	600A Kit

Class J Fusing

All 30-600A, 600V and 100-600A,240V fusible Heavy Duty Switches are field convertible to accept Class J fuses by moving the load base to a pre-drilled J fuse position. All 100-600A fusible General Duty switches can also be field converted to accept Class J fuses. ***Note:*** Only 600A switches require an adapter kit to be field converted to Class J.

Class J Fuse Kits

Catalog Number	Description
HJ66A	600A, 240V/600V Kit



HT63

Class T Fuse Adapter Kits

All 100-1200A Switches are field convertible to accept Class T fuses. 800A switch can accept class T without adapter kit

Class T Fuse Adapter Kits①

Catalog Number	Description
HT23	100A, 240V Kit
HT63	100A, 600V Kit
HT24	200A, 240V Kit
HT64▲	200A, 600V Kit
HT25A	400A, 240V Kit
HT65A	400A, 600V Kit
HT26A	600A, 240V Kit
HT66A	600A, 600V Kit
No kit required	800A, 240V
No kit required	800A, 600V
TFAK82	1200A, 240V Kit

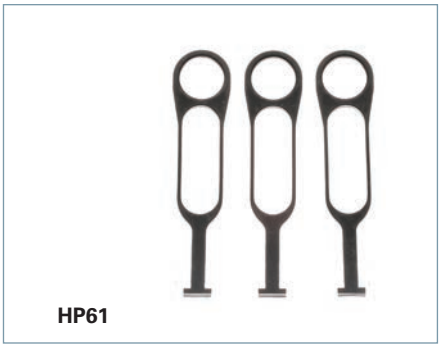

HP61

Fuse Puller Kits

Fuse Puller Kits are field installable in 30-100A Type VBII Heavy Duty Switches (one kit required per 3-pole switch).

Fuse Puller Kits

Switch Ampere Rating	Fuse Puller Kit Catalog Number
30	**HP61**
60	**HP62▲**
100	**HP63▲**

▲ Built to order. Allow 6–8 weeks for delivery.

① One kit per pole required.

Full Coverage Shielding

Kits provide a clear plastic inner shield to prevent contact with any internal switch parts. The shield covers the complete opening of the switch. Fuses can be accessed via a shield-integrated hinged door.

Full Coverage Shielding①

Switch Ampere Rating	Kit Catalog Number	Coverage	Qty to Order Per Switch
30A HD Fusible	**HSK61SSW**	Full	1
60A HD	**HSK62SSW**	Full	1
100A HD	**HSK63SSW**	Full	1
200A HD②	**HSK64SSW**	Full	1

Service Entrance Compliant Internal Barriers

All HD and 400A, 600A GD come with line side shielding from the factory to reduce chance of incidental contact with live parts. When switches are utilized as a service entrance, additional internal shielding is required by the latest UL 98 standard and to meet NEC 230.62. These barriers are field installable.

Internal Line side barrier kits

Switch Ampere Rating	Kit Catalog Number	Coverage	Qty to Order Per Switch
30-60A GD Non-fusible	**HSK212BA**	Line Side	1
30A GD Fusible	**HSK21BA**	Line Side	1
60A GD Fusible	**HSK22BA**	Line Side	1
100A GD	**HSK23B**	Line Side	1
200A GD	**HSK24B**	Line Side	1
30A HD	**HSK61B**	Line Side	1
60-100A HD	**HSK623B**	Line Side	1
200A HD	**HSK64B**	Line Side	1
400-600A HD/GD	**HSK656BA**	Line Side	1
800A HD	**HSK67B**	Line Side	Per Pole
1200A HD	**HSK68B**	Line Side	Per Pole



HN264

200% Neutral Kits

UL listed 200% Neutrals are available on 100-600A Heavy Duty Switches. They are typically used with non-linear transformers or where increased neutral ampacity/lug capacity is required.

200% Neutral Kits

Switch Ampere Rating	Kit Catalog Number	Wire Range Line & Load Lugs (Cu/Al)
100	**HN263**	(2) #14-1/0 AWG
200	**HN264**	(2) #6 AWG-300 Kcmil
400	**HN656A**	(2) 1/0 AWG-600 Kcmil (2) #6 AWG-300 Kcmil
600	**HN678A**	(4) 1/0 AWG - 600 Kcmil (2) #6 AWG - 300 Kcmil



HN612

Neutral Kits

Standard Neutral Kits can be field installed in General and Heavy Duty Switches.

Neutral Kits

Switch Ampere Rating	Kit Catalog Number
30 GD	n/a
30 HD	**HN612**
60 GD	**HN22A**
60, 100 HD, 100 GD	**HN623**
200	**HN64**
400 & 600	**HN656A**
800 & 1200	**HN678**

▲ Built to order. Allow 6–8 weeks for delivery.

① Not designed for use in Non-metallic 4X safety switches. Not designed for use with Auxiliary Contacts.

② HSK64SSW is designed exclusively for 200A heavy-duty fusible switches with a standard size enclosure and 200A heavy-duty non-fusible switches with an over-sized enclosure. HSK64SSW is not suited for any other configurations.



HA261234



HA265678



HLC612



HG261234

Auxiliary Contacts

Auxiliary Contacts are available only for Heavy Duty Switches. The auxiliary contacts are available in 1 normally open and 1 normally closed or 2 normally open and 2 normally closed configurations. Siemens offers a PLC Auxiliary Switch (30-600A) that has very low resistance for low voltage and current typical in PLC circuits. All auxiliary contacts make after and break before main switch contacts.

Auxiliary Contacts①

Switch Ampere	Aux. Switch Catalog Number	Kit Ampere Rating 125V AC Max.	250V AC Max.	28V DC Max.	Horsepower Rating 125V AC Max.	250V AC Max.
With 1 NO & 1 NC Isolated Contacts						
30-600	**HA161234**	10	10	7	1/2	3/4
800-1200	**HA165678**	10	10	—	1/2	3/4
With 2 NO & 2 NC Isolated Contacts						
30-600	**HA261234**	10	10	7	1/2	3/4
800-1200	**HA265678**	10	10	7	1/2	3/4
Low Current PLC Type with 1 NO & 1 NC Gold Plated Contacts						
30-600	**HA361234**	10	10	7	1/2	3/4
800-1200	**HA365678**	10	10	—	1/2	3/4

Copper Lug Kits

Heavy duty switches are UL approved to accept field installed copper lug kits.

Copper Lug Kits

Switch Ampere Rating	Copper Lug Catalog Number	Description
30–60	**HLC612**	(9) Lugs/Kit #14-4 AWG Cu
100	**HLC63▲**	(9) Lugs/Kit #14-1/0 AWG Cu
200	**HLC64▲**	(9) Lugs/Kit #6 AWG-300 Kcmil Cu
400-600	**HCU656A■**	(1) Lugs/Kit #1/0 AWG-600 Kcmil Cu
800–1200	**HLC65678**	(1) Lugs/Kit #1/0 AWG-600 Kcmil Cu

▲ Built to order. Allow 6–8 weeks for delivery.

■ Purchase field replacement kit along with lugs.

① Series A 400A and 600A switches use HA161234, HA261234 or HA361234 auxiliary contacts. Earlier 400A and 600A switches use HA165678, HA265678 or HA365678 auxiliary contacts.

Quick Connects

They provide two point control power take-off capability and are normally used on two poles on the line side when it is required to have control power available when the switch is in the OFF position. They provide a mounting provision for standard ¼" quick connect terminal. Installed in the line or load side. 30A VBII switches have lugs UL listed to accept (2) wires per pole as standard so a 30A kit is not required.

Quick Connects

Catalog Number	Description
HCQ62	60A 2 wire quick connect kit
HCQ63	100A 2 wire quick connect kit
HCQ64	200A 2 wire quick connect kit

Isolated Ground Kits

Isolated Ground Kits are available on 30-600A Heavy Duty Switches. They are normally used on circuits with a high content of computer or other electronic loading which require a ground which is isolated from the building ground and neutral circuits. The kit includes both isolated and grounded terminals as listed below.

Isolated Ground Kits

Switch Ampere Rating	Catalog Number	Number of Terminals Isolated	Number of Terminals Grounded	Wire Range Per Terminal (Cu/Al)
30–200	**HG261234**	2	2	#14-4 AWG
400–600	**HG2656A**	4	4	2/0-14 AWG 2/0-6 AWG

Equipment Ground Kits

Equipment Ground Lug Kits are available for all General and Heavy Duty Switches. They are field installable in Type 1 and Type 3R Switches and are factory installed as standard in Type 4 / 4X and Type 12 and also in all VBII 4&6-pole Switches.

Equipment Ground Kits

Switch Ampere Rating	Catalog Number	Number of Terminals	Wire Range Per Terminal (Cu/Al)
30–200 GD	**HG61234**	2	#14-4 AWG
30–200 HD	**HG61234**	2	#14-4 AWG
400 & 600	**HG656A**	4	2/0-6 AWG
800–1200	**HG678**	8	#6 AWG-250 Kcmil

Interchangeable Hubs

Conduit hubs are available for Type 3R, 12 and 4 / 4X applications. 30-200A Type 3R Switches are provided with a conduit hub provision and a removable hub plate on their top rainshed.

Conduit Size (inches)	Catalog Number	Used On
Type 3R①		
Cover	**ECHA000**	30–60A GD Only
3/4	**ECHA075**	
1	**ECHA100**	
1 1/4	**ECHA125**	
Cover	**ECHS000**	100–200A GD 30–200A HD
3/4	**ECHS075**	
1	**ECHS100**	
1 1/4	**ECHS125**	
1 1/2	**ECHS150**	
2	**ECHS200**	
2 1/2	**ECHS250**	
2 1/2	**ECHV250**	400–1200A②
3	**ECHV300**	
3 1/2	**ECHV350**	
4	**ECHV400**	
Type 4/4X③		
3/4	**SSH075**	30–200A
1	**SSH100**	
1 1/4	**SSH125**	
1 1/2	**SSH150**	
2	**SSH200**	

Note: 30 thru 200A. Type 3R Switches have removable hub plates on rainshed. 400A and larger Type 3R Switches have no provisions for mounting hubs. Drill or punch hole in the field to accommodate hub size desired.

Field Replacement Kits and Neutral Barrier Kits

All Heavy Duty Switches are field convertible for (Crimp) type lugs. When compression lugs are required for 30-100A switches, a neutral barrier kit is required for 1-Phase, 3W or 3-Phase, 4W applications. When compression lugs are required on 400-1200A switches, lug mounting kits are required.

Field Replacement Kits and Neutral Barrier Kits

Switch Ampere Rating	Catalog Number	Kit Description
30	**HCL612**	Neutral Barrier Kit
60 & 100	**HCL623**	Neutral Barrier Kit
400	**HCM65A**	240V/600V Fusible Kit
400	**HNCM65A**	240/600V Non-Fusible Kit
600	**HCM66A**	240V/600V Fusible Kit
600	**HNCM66A**	240V/600V Non-Fusible Kit
800④	**HCL65678■**	1 Pole, Compression Lug Mounting Kit

Lugs

30 & 60A HD Switches are suitable for use with 60° or 75°C wire. 100-1200A are suitable for use with 75°C rated wire.

Multiple Padlock Accessory

A tamper-proof device to provide for multiple padlocking to meet OSHA or plant requirements. Accepts up to 6 1/4" padlocks. Catalog number **SL0420**. Standard Carton-12.



SSH125



ECHV300



ECHS200



SL0420

■ Built to order. Allow 3-4 weeks for delivery.

① Hubs suitable for 3R Switches.
② 400-1200A require an additional Hub Gasket Kit with use of a Hub. Catalog number HVGK is a suitable gasket kit for this.
③ Also suitable for Type 12 applications.
④ Provides mounting for (2) compression lugs per phase on line or load.

Safety Switch Dimensions (Inches)* & Shipping Weights

Catalog Number	Height			Width		Depth		Knockout Diagram①	Approx. Shipping Weight (lbs.)
	Box A	With Door B	With Rain Shed C	Box D	With Handle E	Box F	With Handle G		
GF221NA, GF321NA	8.4	8.56	—	5.08	5.44	2.93	3.96	S4	30(10)
GF221NRA, GF321NRA	8.4	8.56	8.56	5.08	5.44	2.93	3.96	S5	30(10)
GF221NLA, GF321NLA	9.91	10.07	10.07	6.06	6.42	3.21	4.24	S26	20(5)
GF221NRLA, GF321NRLA	9.91	10.07	—	6.06	6.42	3.21	4.24	S25	20(5)
GF222NA, GF3222NA	9.91	10.07	—	6.06	6.42	3.21	4.24	S21	20(5)
GF222NRA, GF322NRA	9.91	10.07	10.07	6.06	6.42	3.21	4.24	S22	20(5)
GF223NA	16.3	17.5	—	10.2	11.2	5.1	8.5	S16	17
GF223NRA	16.3	17.5	17.8	10.2	11.2	5.1	8.5	S17	17
GF224NA	25	26	—	15.4	16.6	7.8	10.7	S12	37
GF224NRA	25	26	26.3	15.4	16.6	7.8	10.7	S13	37
GF225NA	45.32	45.81	—	22.4	23.404	6.94	9.93	S18	91.1
GF225NRA	45.32	45.81	—	22.4	23.404	6.94	9.93	S19	91.1
GF226NA	45.32	45.81	—	22.4	23.404	6.94	9.93	S18	95.6
GF226NRA	45.32	45.81	—	22.4	23.404	6.94	9.93	S19	95.6
GF323NA	16.3	17.5	—	10.2	11.2	5.1	8.5	S16	17
GF323NRA	16.3	17.5	17.8	10.2	11.2	5.1	8.5	S17	17
GF323NLA	21.95	23.15	—	9.64	11.7	5.05	8.63	S10	25
GF323NRLA	21.95	—	23.46	9.64	11.67	5.05	8.7	S11	25
GF324NA	25	26	—	15.4	16.6	7.8	10.7	S12	37
GF324NRA	25	26	26.3	15.4	16.6	7.8	10.7	S13	37
GF324NLA	29.9	31.07	—	14.62	16.68	6.36	10.92	S12	49
GF324NRLA	29.9	—	31.42	14.61	16.68	6.36	10.92	S13	50
GF325NA	45.32	45.81	—	22.4	23.404	6.94	9.93	S18	94.6
GF325NRA	45.32	45.81	—	22.4	23.404	6.94	9.93	S19	94.6
GF326NRA	45.32	45.81	—	22.4	23.404	6.94	9.93	S19	99.6
GF326NA	45.32	45.81	—	22.4	23.404	6.94	9.93	S18	99.6
GF326NRA	45.32	45.81	—	22.4	23.404	6.94	9.93	S19	99.6
GNF221A, GNF321A	6.18	6.35	—	4.2	4.56	2.88	3.93	S4	20(10)
GNF221RA, GNF321RA	6.18	6.35	6.35	4.2	4.56	2.88	3.93	S5	20(10)
GNF321LA, GNF221LA	8.4	8.56	—	5.08	5.43	2.93	3.95	S4	30(10)
GNF321LLA, GNF221LLA	9.91	10.07	—	6.06	6.42	3.21	4.24	S24	20(5)
GNF321RLA, GNF221RLA	8.4	8.56	8.56	5.08	5.43	2.93	3.95	S5	30(10)
GNF321RLLA, GNF221RLLA	9.91	10.07	10.07	6.06	6.42	3.21	4.24	S23	20(5)
GNF222A, GNF322A	8.4	8.56	—	5.08	5.43	2.93	3.95	S4	30(10)
GNF322LA, GNF222LA	9.91	10.07	—	6.06	6.42	3.21	4.24	S24	20(5)
LNF222RA, LNF221RLA	8.4	8.56	8.56	5.08	5.43	2.93	3.95	S20	30(10)
GNF322RLA, GNF222RLA	9.91	10.07	10.07	6.06	6.42	3.21	4.24	S23	20(5)
GNF222RA, GNF322RA	8.4	8.56	8.56	5.08	5.43	2.93	3.95	S5	30(10)
LNF221RLLA, LNF222RLA	9.91	10.07	—	6.06	6.42	3.21	4.24	S23	20(5)
GNF323A	16.3	17.5	—	10.2	11.2	5.1	8.5	S16	17
GNF323RA, GNF223RA	16.3	17.5	17.8	10.2	11.2	5.1	8.5	S17	17
GNF324A	25	26	—	15.4	16.6	7.8	10.7	S12	35
GNF324RA, GNF224RA	25	26	26.3	15.4	16.6	7.8	10.7	S13	35
GNF325A	33.47	33.96	—	22.4	23.404	6.94	9.93	S18	75
GNF326A	33.47	33.96	—	22.4	23.404	6.94	9.93	S18	77
HF221J also **HF261J**	14.27	17.33	—	6.65	9.02	5.32	10.46	—	13
HF221N also **HF261**	14.26	14.60	—	6.64	7.75	4.71	8.89	S6	13
HF221NR also **HF261R**	14.34	—	14.91	6.64	7.88	5.00	9.18	S8	14
HF221S also **HF261S**	14.27	17.33	—	6.65	9.02	5.32	10.46	—	13
HF222J also **HF262J**	16.22	19.31	—	9.17	11.47	5.33	10.46	—	19
HF222N also **HF262**	16.26	16.62	—	9.16	10.37	4.71	8.67	S16	18
HF222NR also **HF262R**	16.26	—	16.93	9.16	10.41	5.05	9.21	S17	19
HF222S also **HF262S**	16.22	19.31	—	9.17	11.47	5.33	10.46	—	19
HF223J also **HF263J**	21.96	23.16	—	9.65	12.02	5.34	10.46	—	24
HF223N also **HF263**	21.95	23.15	—	9.64	12.01	5.05	10.17	S10	23
HF223NR also **HF263R**	21.95	—	23.46	9.64	11.97	5.05	10.17	S11	24
HF223S also **HF263S**	21.96	23.16	—	9.65	12.02	5.34	10.46	—	24
HF224J	29.96	31.07	—	14.62	16.95	6.63	12.58	—	48
HF224N	29.9	31.07	—	14.62	16.98	6.36	12.33	S12	47
HF224NR	29.9	—	31.42	14.61	16.99	6.36	12.33	S13	48
HF224S	29.96	31.07	—	14.62	16.95	6.63	12.58	—	48
HF225NRA	45.32	45.81	—	22.4	23.404	6.94	9.93	S19	91.1
HF225NA	45.32	45.81	—	22.4	23.404	6.94	9.93	S18	91.1
HF226NA	45.32	45.81	—	22.4	23.404	6.94	9.93	S18	95.6
HF226NRA	45.32	45.81	—	22.4	23.404	6.94	9.93	S19	95.6
HF227N	66.67	67.16	—	38.4	39.96	9.24	14.68	—	360
HF227NR	66.67	—	67.74	38.4	39.96	9.24	14.68	—	362
HF228N	66.67	67.16	—	38.4	39.96	9.24	14.68	—	362

***For inches / millimeters conversion, multiply inches by 25.4.**

① Knocks not provided on Type 4 / 4X and 12 or in 800 & 1200A switches.

Safety Switch Dimensions (Inches)* & Shipping Weights

Catalog Number	Height			Width		Depth		Knockout Diagram①	Approx. Shipping Weight (lbs.)
	Box A	With Door B	With Rain Shed C	Box D	With Handle E	Box F	With Handle G		
HF228NR	66.67	—	67.74	38.4	39.96	9.24	14.68	—	364
HF261	14.26	14.60	—	6.64	7.75	4.71	8.89	S6	13
HF261R	14.34	—	14.91	6.64	7.88	5.00	9.18	S8	14
HF262	16.26	16.62	—	9.16	10.37	4.71	8.67	S16	18
HF262R	16.26	—	16.93	9.16	10.41	5.05	9.21	S17	19
HF321J	14.27	17.33	—	6.65	9.02	5.32	10.46	—	14
HF321N	14.26	14.60	—	6.64	7.75	4.71	8.89	S6	13
HF321NR	14.34	—	14.91	6.64	7.88	5.00	9.18	S8	14
HF321S, SS	14.27	17.33	—	6.65	9.02	5.32	10.46	—	14
HF322J	16.27	19.31	—	9.17	11.47	5.33	10.46	—	20
HF322N	16.26	16.62	—	9.16	10.37	4.71	8.67	S16	18
HF322NR	16.26	—	16.93	9.16	10.41	5.05	9.21	S17	19
HF322S, SS	16.27	19.31	—	9.17	11.47	5.33	10.46	—	20
HF323J	21.96	23.16	—	9.65	12.02	5.34	10.46	—	25
HF323N	21.95	23.15	—	9.64	12.01	5.05	10.17	S10	25
HF323NR	21.95	—	23.46	9.64	11.97	5.05	10.17	S11	26
HF323S, SS	21.96	23.16	—	9.65	12.02	5.34	10.46	—	25
HF324J	29.96	31.07	—	14.62	16.95	6.63	12.58	—	49
HF324N	29.9	31.07	—	14.62	16.98	6.36	12.33	S12	49
HF324NR	29.9	—	31.42	14.61	16.99	6.36	12.33	S13	50
HF324S, SS	21.96	31.07	—	14.62	16.95	6.63	12.58	—	49
HF325JA	45.32	45.81	—	22.4	23.404	6.97	10.05	—	93
HF325NA	45.32	45.81	—	22.4	23.404	6.94	9.93	S18	94.6
HF325NRA	45.32	45.81	—	22.4	23.404	6.94	9.93	S19	94.6
HF325SA	45.32	45.81	—	22.4	23.404	7.34	10.347	—	93
HF325SSA	45.32	45.81	—	22.4	23.404	7.34	10.347	—	93
HF326JA	45.32	45.81	—	22.4	23.404	6.97	10.05	—	98
HF326NA	45.32	45.81	—	22.4	23.404	6.94	9.93	S18	99.6
HF326NRA	45.32	45.81	—	22.4	23.404	6.94	9.93	S19	99.6
HF326SA	45.32	45.81	—	22.4	23.404	7.34	10.347	—	98
HF326SSA	45.32	45.81	—	22.4	23.404	7.34	10.347	—	98
HF327J	66.67	67.16	—	38.4	39.96	9.24	14.68	—	367
HF327N	66.67	67.16	—	38.4	39.96	9.24	14.68	—	380
HF327NR	66.67	—	67.74	38.4	40.25	9.24	14.68	—	383
HF327S	66.67	67.16	—	38.4	39.96	9.24	14.68	—	367
HF328N	66.67	67.16	—	38.4	39.96	9.24	14.68	—	382
HF328NR	66.67	—	67.74	38.4	40.25	9.24	14.68	—	385
HF361, PV, PVPG	14.26	14.60	—	6.64	7.75	4.71	8.89	S6	13
HF361J, JW	14.27	17.33	—	6.65	9.02	5.32	10.46	—	14
HF361L	16.26	17.46	—	9.15	11.53	5.05	10.17	S16	19
HF361N	14.26	14.60	—	6.64	7.75	4.71	8.89	S6	13
HF361NR	14.34	—	14.91	6.64	7.88	5.00	9.18	S8	14
HF361R, RPV, RPVPG	14.34	—	14.91	6.64	7.88	5.00	9.18	S8	14
HF361RL, RW	16.26	—	16.93	9.16	10.41	5.05	9.21	S17	19
HF361S, SS, SSW, SW	14.27	17.33	—	6.65	9.02	5.32	10.46	—	15
HF362, PV, PVPG	16.26	16.62	—	9.16	10.37	4.71	8.67	S16	18
HF362J, JW	16.27	19.31	—	9.17	11.47	5.33	10.46	—	20
HF362N	16.26	16.62	—	9.16	10.37	4.71	8.67	S16	18
HF362NR	16.26	—	16.93	9.16	10.41	5.05	9.21	S17	19
HF362R, RPV, RPVPG, RW	16.26	—	16.93	9.16	10.41	5.05	9.21	S17	19
HF362RL	21.95	—	23.46	9.64	11.97	5.05	10.17	S11	25
HF362S, SS, SSW, SW	16.27	19.31	—	9.17	11.47	5.33	10.46	—	20
HF363, PV, PVPG	21.95	23.15	—	9.64	12.01	5.05	10.17	S10	24
HF363J, JW	21.96	23.16	—	9.65	12.02	5.34	10.46	—	25
HF363N	21.95	23.15	—	9.64	12.01	5.05	10.17	S10	25
HF363NR	21.95	—	23.46	9.64	11.97	5.05	10.17	S11	26
HF363R, RPV, RPVPG	21.95	—	23.46	9.64	11.97	5.05	10.17	S11	25
HF363S, SS, SSW, SW	21.96	23.16	—	9.65	12.02	5.34	10.46	—	25
HF364, PV, PVPG	29.9	31.07	—	14.62	16.98	6.36	12.33	S12	48
HF364J, JW	29.96	31.07	—	14.62	16.95	6.63	12.58	—	49
HF364N	29.9	31.07	—	14.62	16.98	6.36	12.33	S12	49
HF364NR	29.9	—	31.42	14.61	16.99	6.36	12.33	S13	48
HF364R, RPV, RPVPG	29.9	—	31.42	14.61	16.99	6.36	12.33	S13	49
HF364S, SS, SSW, SW	29.96	31.07	—	14.62	16.95	6.63	12.58	—	49
HF365A	45.32	45.81	—	22.4	23.404	6.94	9.93	S18	93
HF365JA, JWA	45.32	45.81	—	22.4	23.404	6.97	10.05	—	93
HF365NA	45.32	45.81	—	22.4	23.404	6.94	9.93	S18	94.6
HF365NRA	45.32	45.81	—	22.4	23.404	6.94	9.93	S19	94.6

***For inches / millimeters conversion, multiply inches by 25.4.**

① Knocks not provided on Type 4 / 4X and 12 or in 800 & 1200A switches.

Safety Switch Dimensions (Inches)* & Shipping Weights

Catalog Number	Height			Width		Depth		Knockout Diagram①	Approx. Shipping Weight (lbs.)
	Box A	With Door B	With Rain Shed C	Box D	With Handle E	Box F	With Handle G		
HF365RA	45.32	45.81	—	22.4	23.404	6.94	9.93	S19	93
HF365SA, SS, SWA, SSWA	45.32	45.81	—	22.4	23.404	7.34	10.347	—	93
HF366A	45.32	45.81	—	22.4	23.404	6.94	9.93	S18	98
HF366JA, JWA	45.32	45.81	—	22.4	23.404	6.97	10.05	—	98
HF366NA	45.32	45.81	—	22.4	23.404	6.94	9.93	S18	99.6
HF366NRA	45.32	45.81	—	22.4	23.404	6.94	9.93	S19	99.6
HF366RA	45.32	45.81	—	22.4	23.404	6.94	9.93	S19	98
HF366SA, SSA	45.32	45.81	—	22.4	23.404	7.34	10.347	—	98
HF367	66.67	67.16	—	38.4	39.96	9.24	14.68	—	380
HF367J, JW	66.67	67.16	—	38.4	39.96	9.24	14.68	—	380
HF367N	66.67	67.16	—	38.4	39.96	9.24	14.68	—	382
HF367NR	66.67	—	67.74	38.4	40.25	9.24	14.68	—	386
HF367R, RW	66.67	—	67.74	38.4	40.25	9.24	14.68	—	382
HF367S, SW	66.67	67.16	—	38.4	39.96	9.24	14.68	—	380
HF368, J, S, JW, SW	66.67	67.16	—	38.4	39.96	9.24	14.68	—	383
HF368N	66.67	67.16	—	38.4	39.96	9.24	14.68	—	385
HF368NR	66.67	—	67.74	38.4	40.25	9.24	14.68	—	388
HF368R, RW	66.67	—	67.74	38.4	40.25	9.24	14.68	—	385
HFC221N	14.26	14.6	—	6.64	7.75	4.71	8.89	S6	13
HFC221NR	14.34	—	14.91	6.64	7.88	5	9.18	S8	14
HFC222N	16.26	16.62	—	9.16	10.37	4.71	8.67	S16	18
HFC222NR	16.26	—	16.93	9.16	10.41	5.05	9.21	S17	19
HFC261	14.26	14.6	—	6.64	7.75	4.71	8.89	S6	13
HFC261R	14.34	—	14.91	6.64	7.88	5	9.18	S8	14
HFC262	16.26	16.62	—	9.16	10.37	4.71	8.67	S16	18
HFC262R	16.26	—	16.93	9.16	10.41	5.05	9.21	S17	19
HFC321N	14.26	14.6	—	6.64	7.75	4.71	8.89	S6	13
HFC321NR	14.34	—	14.91	6.64	7.88	5	9.18	S8	14
HFC322N	16.26	16.62	—	9.16	10.37	4.71	8.67	S16	18
HFC322NR	16.26	—	16.93	9.16	10.41	5.05	9.21	S17	19
HFC361	14.26	14.6	—	6.64	7.75	4.71	8.89	S6	13
HFC361N	14.26	14.6	—	6.64	7.75	4.71	8.89	S6	13
HFC361NR	14.34	—	14.91	6.64	7.88	5	9.18	S8	14
HFC361R	14.34	—	14.91	6.64	7.88	5	9.18	S8	14
HFC362	16.26	16.62	—	9.16	10.37	4.71	8.67	S16	18
HFC362N	16.26	16.62	—	9.16	10.37	4.71	8.67	S16	18
HFC362NR	16.26	—	16.93	9.16	10.41	5.05	9.21	S17	19
HFC362R	16.26	—	16.93	9.16	10.41	5.05	9.21	S17	19
HNF365JA, JWA	45.32	45.81	—	22.4	23.404	6.97	10.05	—	75
HNF365RA	33.47	33.96	—	22.4	23.404	6.94	9.93	S19	75
HNF365SA, SSA, SWA, SSWA	33.47	33.96	—	22.4	23.404	7.34	10.347	—	75
HNF366SA, SSA	33.47	33.96	—	22.4	23.404	7.34	10.347	—	77
HNF366JA, JWA	45.32	45.81	—	22.4	23.404	6.97	10.05	—	77
HNF366RA	33.47	33.96	—	22.4	23.404	6.94	9.93	S19	77
HNF361, PV, PVPG also **HNF261 & HNF362H, HNFC261, HNFC361**	11.11	11.45	—	6.64	7.72	4.7	9.15	S7	11
HNF361J, JW also **HNF261J & HNF362JH**	11.12	14.14	—	6.65	9.02	5.56	10.46	—	13
HNF361R, RPV, RPVPG also **HNF261R & HNF362RH, HNFC261R, HNFC361R**	11.09	—	11.76	6.64	7.88	5	8.91	S9	12
HNF361RL, HNF362R, RPV, RPVPG also **HNF262R, HNFC262R, HNFC362R**	16.26	—	16.93	9.16	10.41	5.05	9.14	S17	18
HNF361S, SS, SSW, SW also **HNF261S & HNF362SH**	11.12	14.14	—	6.65	9.02	5.56	10.46	—	13
HNF362, PV, PVPG also **HNF262, HNFC262, HNFC362**	16.26	16.62	—	9.16	10.26	4.71	9.04	S16	17
HNF362J, JW also **HNF262J**	16.27	17.46	—	9.17	11.47	5.33	10.46	—	19
HNF362RL, HNFC262R, HNFC362R	21.95	—	23.46	9.64	11.97	5.05	10.17	S11	24
HNF362S, SS, SSW, SW also **HNF262S**	16.27	17.46	—	9.17	11.47	5.33	10.46	—	19
HNF263	16.3	17.5	—	10.2	11.5	5.1	10.2	S16	17
HNF236R	16.3	17.5	17.8	10.2	11.5	5.1	10.2	S17	17
HNF363	16.3	17.5	—	10.2	11.5	5.1	10.2	S16	17
HNF363R	16.3	17.5	17.8	10.2	11.5	5.1	10.2	S17	17
HNF363L, PV, PVPG	21.95	23.15	—	9.64	12.01	5.05	10.17	S10	23
HNF363J, JW also **HNF263J**	21.96	23.16	—	9.65	12.02	5.34	10.46	—	24
HNF363RL, RPV, RPVPG also **HNF263R**	21.95	—	23.46	9.64	11.97	5.05	10.17	S11	24
HNF364	25	26	—	15.4	16.6	7.8	12.3	S12	35
HNF364R	25	26	26.3	15.4	16.6	7.8	12.3	S13	35
HNF363S, SS, SSW, SW also **HNF263S**	21.96	23.16	—	9.65	12.02	5.34	10.46	—	24

***For inches / millimeters conversion, multiply inches by 25.4.**

① Knocks not provided on Type 4 / 4X and 12 or in 800 & 1200A switches.

General and Heavy Duty Safety Switches

Dimension Drawings

Safety Switch Dimensions (Inches)* & Shipping Weights

Catalog Number	Height			Width		Depth		Knockout Diagram①	Approx. Shipping Weight (lbs.)
	Box A	With Door B	With Rain Shed C	Box D	With Handle E	Box F	With Handle G		
HNF364L, PV, PVPG	29.9	31.07	—	14.62	16.98	6.36	12.33	S12	46
HNF364J, JW	29.96	31.07	—	14.62	16.95	6.63	12.58	—	47
HNF364RL, RPV, RPVPG	29.9	—	31.42	14.61	16.99	6.36	12.33	S13	47
HNF364S, SS, SSW, SW	29.96	31.07	—	14.62	16.95	6.63	12.58	—	47
HNF365JA, JWA	45.32	45.81	—	22.4	23.404	6.97	10.05	—	75
HNF365RA	33.47	33.96	—	22.4	23.404	6.94	9.93	S19	75
HNF365SA, SSA, SWA, SSWA	33.47	33.96	—	22.4	23.404	7.34	10.347	—	75
HNF366JA, JWA	45.32	45.81	—	22.4	23.404	6.97	10.05	—	77
HNF366RA	33.47	33.96	—	22.4	23.404	6.94	9.93	S19	77
HNF366SA	33.47	33.96	—	22.4	23.404	7.34	10.347	—	77
HNF367, J, JWA	54.67	55.16	—	38.4	39.96	9.24	14.68	—	302
HNF367R, RW	54.67	—	55.7	38.4	40.25	9.24	14.68	—	304
HNF367S, SW	54.67	55.16	—	38.4	39.96	9.24	14.68	—	302
HNF368, J, S, SW, JW	54.67	55.16	—	38.4	39.96	9.24	14.68	—	305
HNF368R, RW	54.67	55.16	—	38.4	40.25	9.24	14.68	—	307
US2:HF361PV	14.26	14.6	—	6.64	7.75	4.71	8.89	S6	13
US2:HF361PVPG	14.26	14.6	—	6.64	7.75	4.71	8.89	S6	13
US2:HF361RPV	14.34	—	14.91	6.64	7.88	5	9.18	S8	14
US2:HF361RPVPG	14.34	—	14.91	6.64	7.88	5	9.18	S8	14
US2:HF362PV	16.26	16.62	—	9.16	10.37	4.71	8.67	S16	18
US2:HF362PVPG	16.26	16.62	—	9.16	10.37	4.71	8.67	S16	18
US2:HF362RPV	16.26	—	16.93	9.16	10.41	5.05	9.21	S17	19
US2:HF362RPVPG	16.26	—	16.93	9.16	10.41	5.05	9.21	S17	19
US2:HNF361PV	11.11	11.45	—	6.64	7.72	4.7	9.15	S7	11
US2:HNF361PVPG	11.11	11.45	—	6.64	7.72	4.7	9.15	S7	11
US2:HNF361RPV	11.09	—	11.76	6.64	7.88	5	8.91	S9	12
US2:HNF361RPVPG	11.09	—	11.76	6.64	7.88	5	8.91	S9	12
US2:HNF362PV	16.26	16.62	—	9.16	10.26	4.71	9.04	S16	17
US2:HNF362PVPG	16.26	16.62	—	9.16	10.26	4.71	9.04	S16	17
US2:HNF362RPV	16.26	—	16.93	9.16	10.41	5.05	9.14	S17	18
US2:HNF362RPVPG	16.26	—	16.93	9.16	10.41	5.05	9.14	S17	18

Type 1 or 3R
30-60A GD

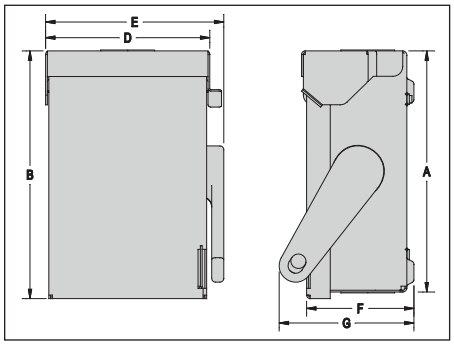

Type 1 or 3R
100-200A GD, 30-200A HD Type VBII

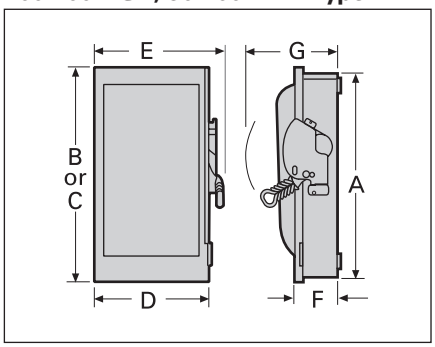

Type 4/4X or 12
30-200A HD Type VBII

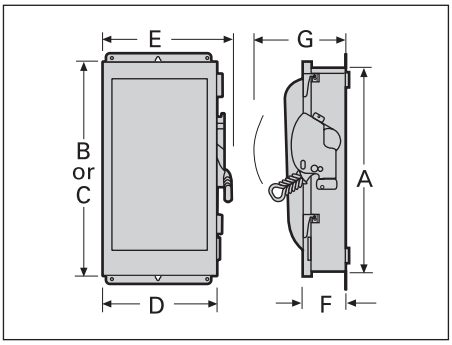

Type 1 or 3R
400-1200A Type VBII (GD & HD)

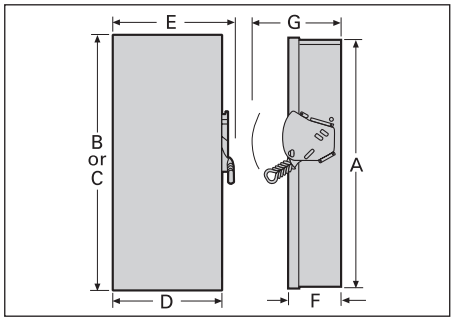

Type 4/4X or 12
400-1200A HD Type VBII

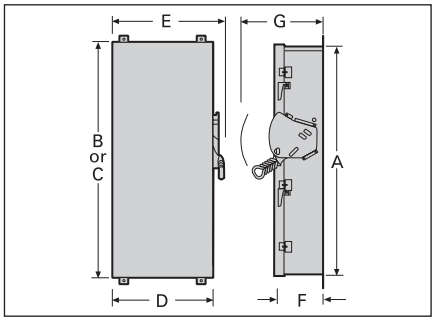

*For inches / millimeters conversion, multiply inches by 25.4.

① Knocks not provided on Type 4 / 4X and 12 or in 800 & 1200A switches.

Special Application Safety Switch Dimensions (Inches)

Ampere Rating	NEMA Type	Figure	Dimensions (Inches)					
			A	B	D	E	F	G
Elevator Control Switch								
30, 60, 100	1	A	29.96	31.07	15.95	16.78	6.58	10.19
30, 60, 100	3R/12	B	29.96	31.07	15.95	16.88	6.58	10.43
200	1/3R/12	B	34.06	35.17	22.12	23.40	7.23	11.30
400	1/3R/12	B	44.70	45.81	22.12	23.40	7.35	11.46
Heavy-Duty Shunt Trip Safety Switches								
30, 60, 100	1/3R/12	B	29.96	31.07	14.66	16.88	6.58	9.88
200	1/3R/12	B	34.06	35.17	22.12	23.40	7.23	11.30
400	1/3R/12	B	44.70	45.81	22.12	23.40	7.35	11.46
Heavy Duty Switches with Surge Protection								
30, 60, 100	1/3R/12	B	29.96	31.07	14.66	16.88	6.58	9.88
200	1/3R/12	B	34.06	35.17	22.12	23.40	7.23	11.30
400	1/3R/12	B	44.70	45.81	22.12	23.40	7.35	11.46

Figure A

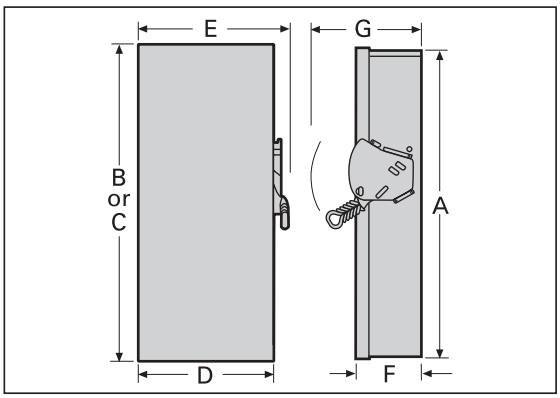

Figure B

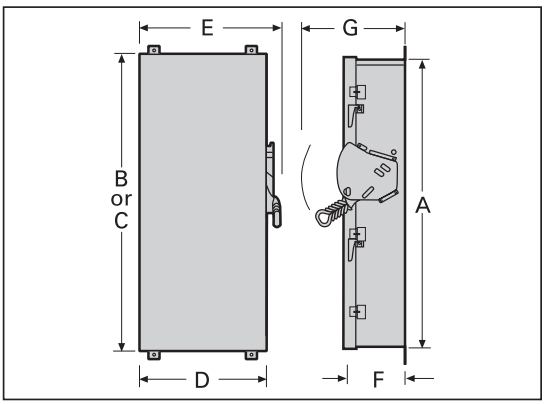

Type 1 & 3R Enclosures

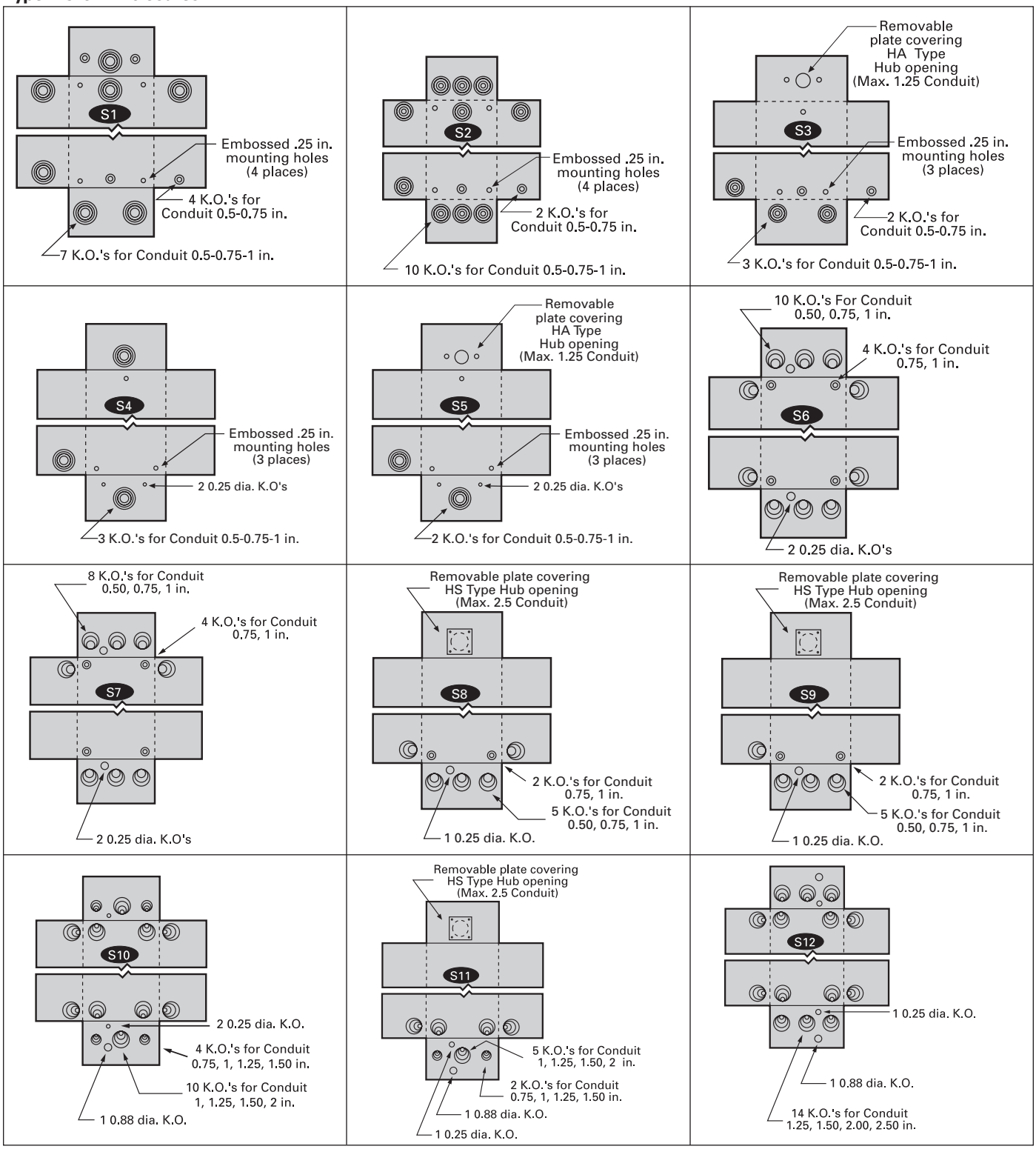

***For inches / millimeters conversion, multiply inches by 25.4.**

Type 1 & 3R Enclosures

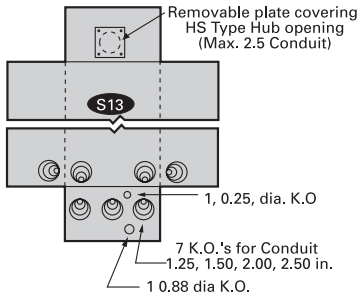

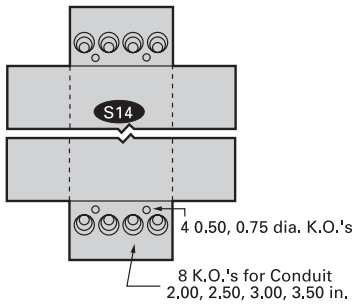

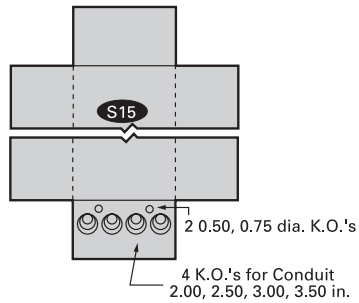

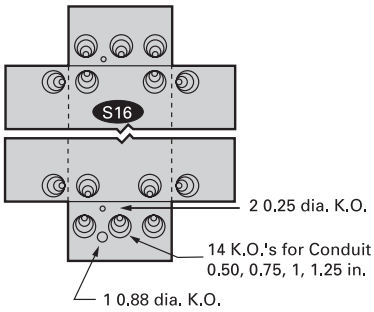

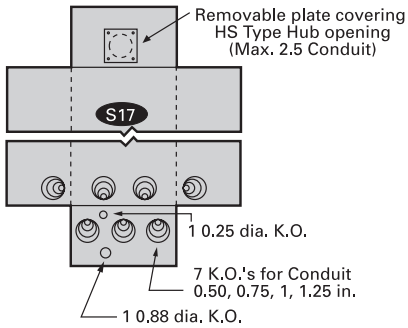

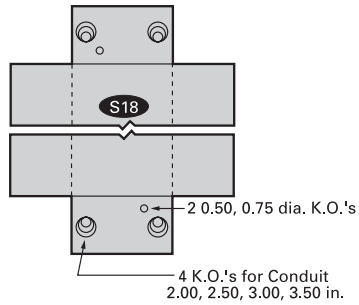

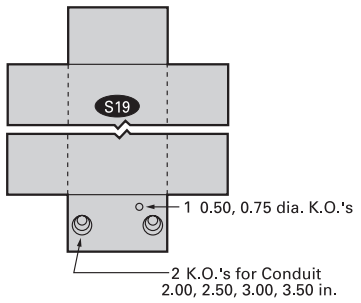

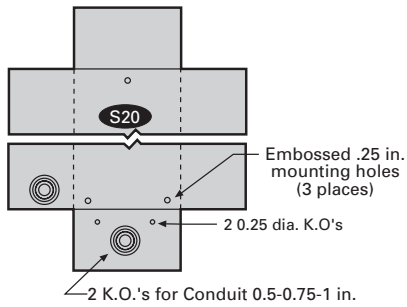

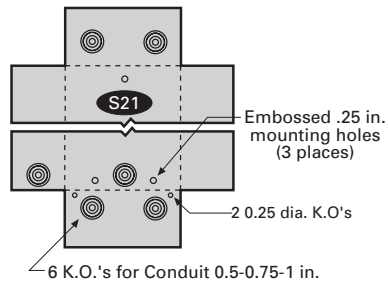

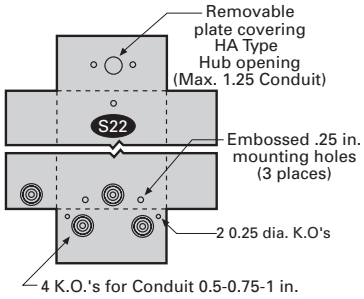

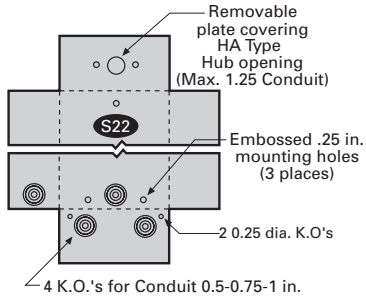

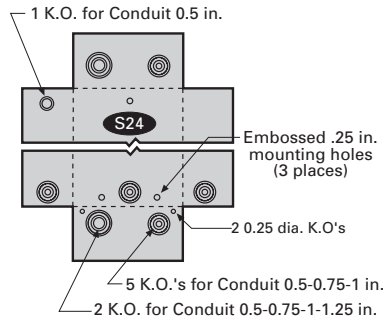

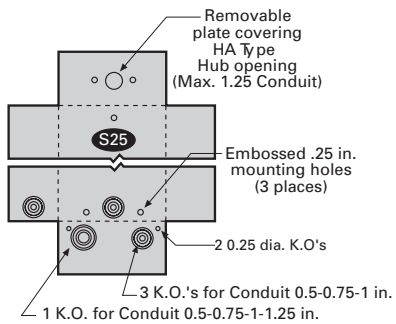

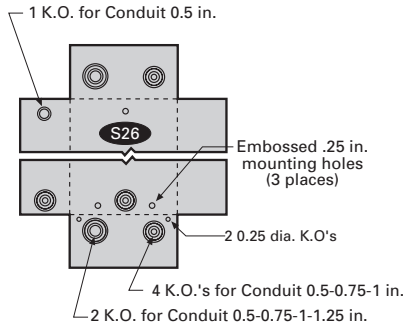

***For inches / millimeters conversion, multiply inches by 25.4.**

Special Application Safety Switches Dimension Drawings

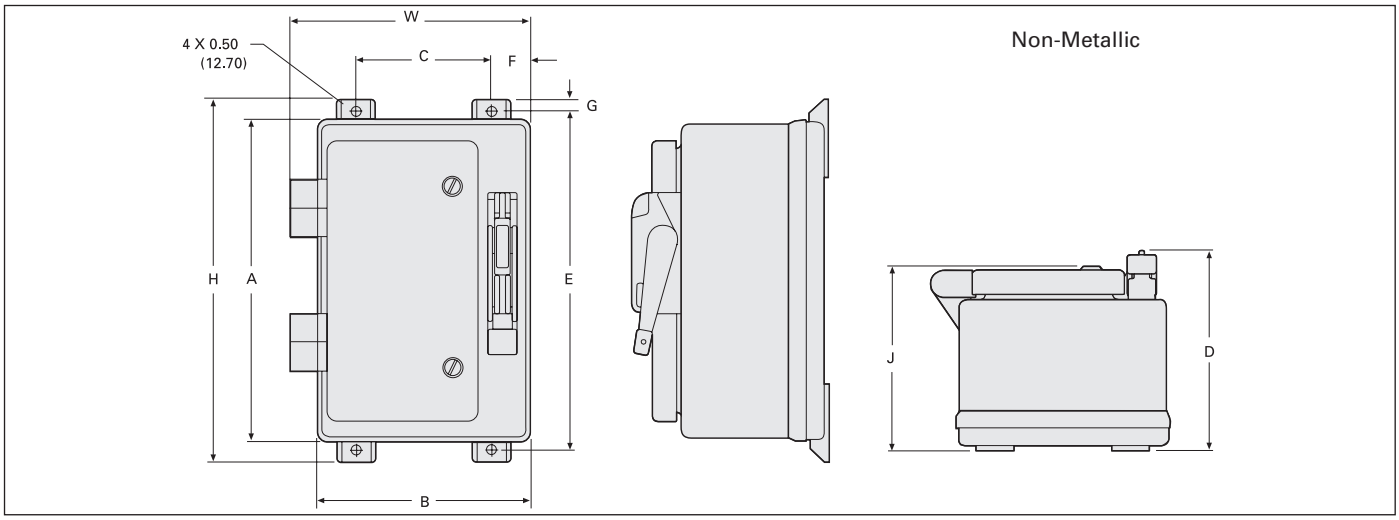

Catalog Number	Dimensions (Inches) Non-Metallic									
	H	W	D	A	B	C	E	F	G	J
HF321NX	18.75	12.11	10.25	16.59	10.97	7.00	17.50	1.98	.46	9.20
HF322NX	18.75	12.11	10.25	16.59	10.97	7.00	17.50	1.98	.46	9.20
HF361NX①	18.75	12.11	10.25	16.59	10.97	7.00	17.50	1.98	.46	9.20
HF362NX①	18.75	12.11	10.25	16.59	10.97	7.00	17.50	1.98	.46	9.20
HF363NX①	26.95	14.87	13.25	24.84	13.72	6.25	25.75	3.75	.46	12.15
HF364NX①	33.41	27.47	13.19	31.31	26.31	18.50	32.25	3.91	.47	12.10
HNF361X①	18.75	12.11	10.25	16.59	10.97	7.00	17.50	1.98	.46	9.20
HNF362X①	18.75	12.11	10.25	16.59	10.97	7.00	17.50	1.98	.46	9.20
HNF363X①	26.95	14.87	13.25	24.84	13.72	6.25	25.75	3.75	.46	12.15
HNF364X①	33.41	27.47	13.19	31.31	26.31	18.50	32.25	3.91	.47	12.10

VBII Interlocked Receptacle Switches

Ampere Rating	Dimensions (Inches)						
	A	B	C	D	E	F	G
Cr-H Type Fusible (240 & 600V)							
30	14.27	7.42	9.02	6.22	1.52	6.1	6.0
60	16.27	9.17	11.47	6.34	1.52	6.4	7.4
100	21.96	9.65	12.02	6.80	1.52	6.5	7.6
Cr-H Type Non-Fusible (600V max.)							
30	14.27	7.42	9.02	6.22	1.52	6.1	6.0
60	16.27	9.17	11.47	6.34	1.52	6.4	7.4
100	21.96	9.65	12.02	6.80	1.52	6.5	7.6
Pyle-National Type Fusible (240 & 600V)							
30	14.27	7.42	9.02	6.22	1.52	3.5	3.0
60	16.27	9.17	11.47	6.34	1.52	5.0	4.5
Pyle-National Type Non-Fusible (600V max.)							
30	14.27	7.42	9.02①	6.22	1.52	3.5	3.0
60	16.27	9.17	11.47①	6.34	1.52	5.0	4.5

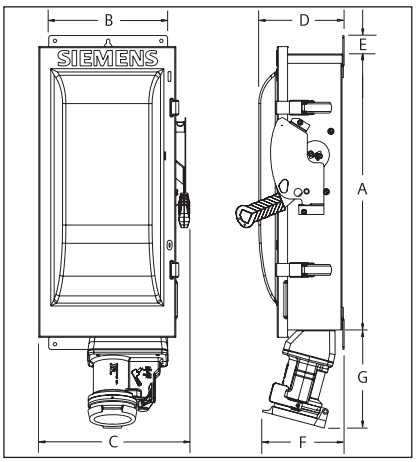

***For inches / millimeters conversion, multiply inches by 25.4.**

① Dimensions also apply to "L" suffix switches (less lugs).

Special Application Safety Switches Dimension Drawings

4 & 6-Pole Safety Switch Dimensions – Inches (mm)

Catalog Number	Enclosure			Mounting		
	A	B	C	D	E	F
Figure 1, 4-Pole Fusible and Non-fusible, Type 1						
HNF461	24.50 (622)	9.53 (242)	6.09 (155)	19.00 (483)	6.75 (171)	0.268 (7)
HF461	29.12 (740)	9.53 (242)	6.09 (155)	23.50 (597)	6.75 (171)	0.268 (7)
HNF462	24.88 (632)	11.50 (292)	6.09 (155)	19.00 (483)	9.38 (238)	0.268 (7)
HF462	33.53 (852)	11.50 (292)	6.09 (155)	27.50 (699)	9.38 (238)	0.268 (7)
HNF463	27.62 (702)	12.18 (309)	6.09 (155)	19.36 (492)	8.00 (203)	0.268 (7)
HF463	36.44 (926)	12.18 (309)	6.09 (155)	28.11 (714)	8.00 (203)	0.268 (7)
HNF464	36.00 (914)	19.12 (486)	6.42 (163)	30.88 (784)	15.00 (381)	0.44 (11)
HF464	49.48 (1257)	19.12 (486)	6.42 (163)	45.50 (1130)	15.00 (381)	0.44 (11)
Figure 2, 4 & 6-Pole Fusible Type 12/3R and 4X						
HF461J, HF661J, HF661S	29.50 (622)	9.53 (242)	6.48 (165)	31.65 (804)	5.47 (139)	0.27 (7)
HF462J, HF662J, HF662S	33.53 (852)	11.50 (292)	6.48 (165)	35.69 (907)	8.00 (203)	0.27 (7)
HF463J, HF663J, HF663S	36.44 (926)	12.18 (309)	6.48 (165)	38.67 (982)	8.47 (215)	0.27 (7)
HF464J, HF664J, HF664S	49.48 (1257)	19.12 (486)	6.78 (172)	51.64 (1312)	13.44 (341)	0.33 (8)
Figure 2, 4 & 6-Pole Non-fusible Type 12/3R and 4X						
HNF461J, HNF661J, HNF661S	24.50 (622)	9.53 (242)	6.48 (165)	26.65 (667)	5.47 (139)	0.27 (7)
HNF462J, HNF662J, HNF662S	24.88 (632)	11.50 (292)	6.48 (165)	27.03 (687)	8.00 (203)	0.27 (7)
HNF463J, HNF663J, HNF663S	27.54 (700)	12.18 (309)	6.48 (165)	29.77 (756)	8.47 (215)	0.27 (7)
HNF464J, HNF664J, HNF664S	36.00 (914)	19.12 (486)	6.78 (172)	38.16 (969)	13.44 (341)	0.33 (8)

Figure 1: Type 1

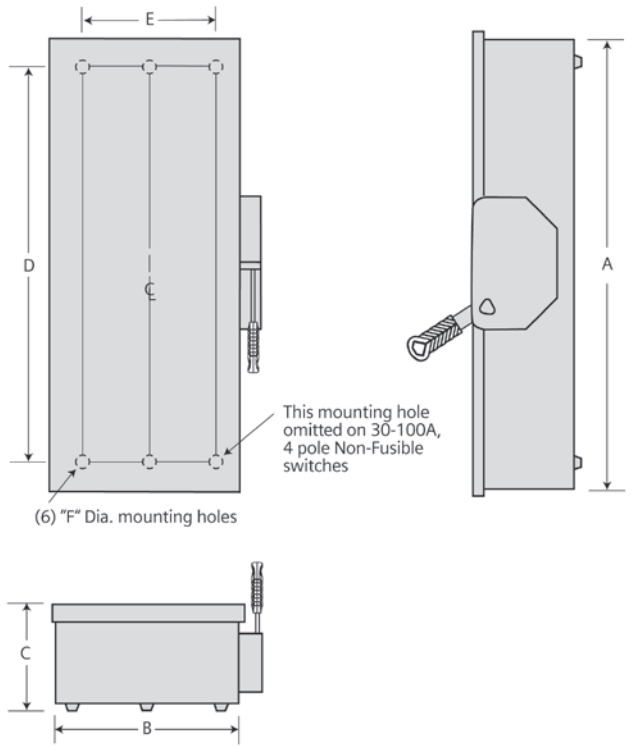

Figure 2 : Type 12/3R and 4X

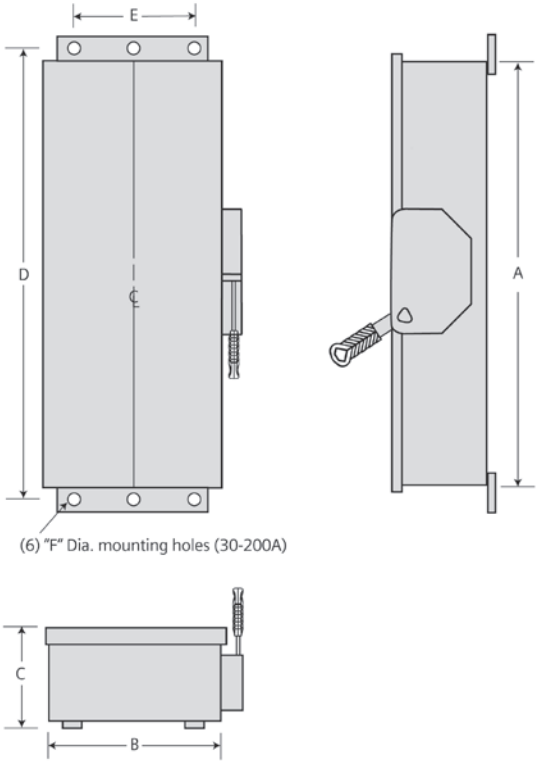

VBII Design Double Throw Dimensions (Inches)

Catalog Number	Enclosure			Mounting		
	A	B	C	D	E	F
Figure 1 (30-1200A Type 1 & 3R)						
DTNF221, DTNF321, DTNF361, DTNF361R	24.50	9.53	6.09	19.00	6.75	0.268
DTF321, DTF321R, DTF361	29.12	9.53	6.09	23.50	6.75	0.268
DTNF222, DTNF322, DTNF362, DTNF362R	24.88	11.50	6.09	19.00	9.38	0.268
DTF322, DTF322R, DTF362	33.45	11.50	6.09	27.50	9.38	0.268
DTNF223, DTNF323, DTNF323R, DTNF363, DTNF363R, DTGNF223R, DTGNF223NR, DTGNF323R , DTGNF323NR	27.62	12.18	6.09	19.36	8.00	0.268
DTF323, DTF323R, DTF363, DTF363R	36.44	12.18	6.09	28.11	8.00	0.268
DTNF224, DTNF224R, DTNF324, DTNF324R, DTNF364, DTNF364R, DTGNF224R, DTGNF224NR, DTGNF324R, DTGNF324NR	36.00	19.12	6.42	31.00	15.00	0.44
DTF224, DTF224R, DTF324, DTF324R, DTF364, DTF364R	49.44	19.12	6.42	44.50	15.00	0.44
DTF325, DTF326, DTF365	73.54	28.22	9.44	65.50	16.00	0.56
DTNF225, DTNF225R, DTNF325, DTNF365, DTNF365R	57.71	28.22	9.44	49.75	16.00	0.56
DTNF326, DTNF366, DTNF366R	57.71	28.22	9.44	49.75	16.00	0.56
DTNF327, DTNF367, DTNF367R	71.65	41.60	9.44	63.70	32.00	0.56
DTNF368, DTNF368R	71.65	41.60	9.44	63.70	32.00	0.56
FR325DTK③, FR355DTK③	74.31	24.90	8.88	69.50	20.25	0.56
FR326DTK③	85.65	27.00	8.88	80.75	22.25	0.56
NFR451DTK③, NFR452DTK③, NFR453DTK③	24.63	17.34	4.78	21.50	14.97①	0.27①
NF454DTK②③, NFR454DTK②③	37.25	19.19	6.32	33.50	16.00②	0.56②
NF455DTK③, NF456DTK③, NF457DTK③, NFR455DTK③, NFR456DTK③, NFR457DTK③	63.31	27.00	8.88	58.50	22.25②	0.56②
Figure 2 (30-200A Type 12 & 4X)						
DTNF361J, DTNF361S	24.42	9.65	6.48	26.65	5.47	0.27
DTNF362J, DTNF362S	24.80	11.61	6.48	27.03	8.00	0.27
DTNF363J, DTNF363S	27.54	12.29	6.48	29.77	8.47	0.27
DTNF364J, DTNF364S	35.93	19.24	6.78	38.16	13.44	0.33
NF355HDTK①③, NF355SSDTK①③	53.82	22.66	7.25	56.20	18.00	0.56
NF454SSDTK③	37.47	19.16	6.48	39.75	15.75	0.50②
F353SSDTK②③	37.00	11.62	5.50	38.50	9.00	0.26
F354SSDTK②③	50.90	19.16	6.46	53.27	16.12	0.50
F355SSDTK②③	74.50	25.00	8.92	76.69	20.25	0.56

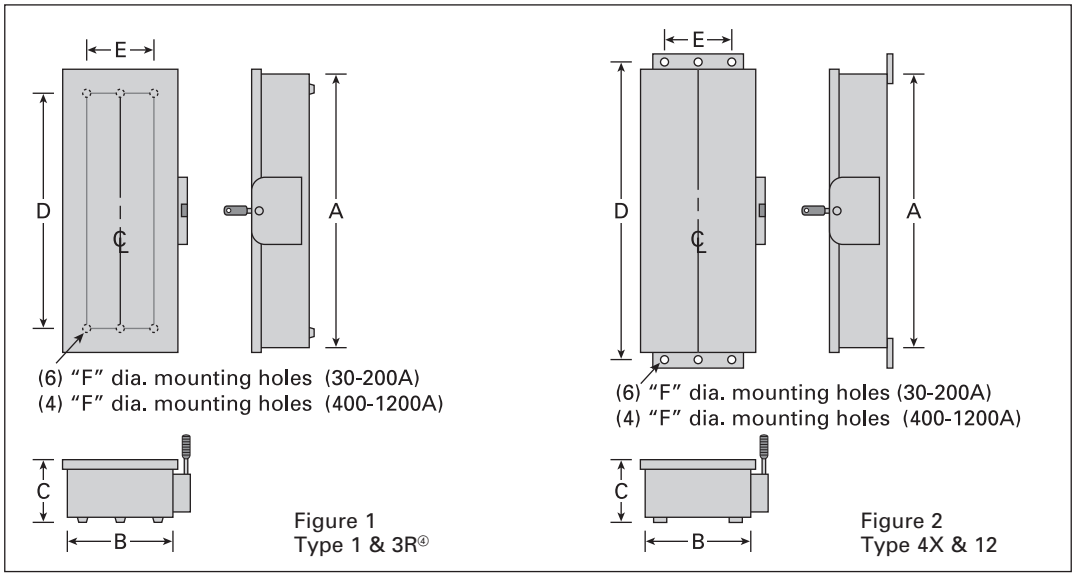

***For inches / millimeters conversion, multiply inches by 25.4.**

① (3) Mounting holes supplied (1 at top).
② (4) Mounting holes provided.
③ These switches are not Type VBII design.
④ Drip hood not shown but provided on Type 3R enclosures.

Description

16–125A non-fusible switches are available in fiberglass reinforced polycarbonate enclosures which are UL approved as Type 12 & 4X and for either indoor or outdoor use. All are horsepower and load break rated. All are panel mounted and are either supplied with factory installed aux. contacts or will accept contact kits. All are compact in size while providing ample wiring space for copper line & load conductors.

Siemens Enclosed Rotary Disconnect Switches

- 16–125A, Non-Fusible
- 600VAC max. rated
- Available in both Type 12 and 4X non-metallic enclosures
- Listed and marked "suitable for use as motor disconnect" per NEC Section 430-109
- Switches are UL listed under File No. E47705 and are CSA certified under File No. 203576
- IEC 60947-3 rated and CE marked (enclosures are IP65 rated)
- HP rated
- 16–63A switches have factory installed ground bars.
- Switches are provided with knockouts
- Padlockable in OFF position with up to (3) padlocks
- Enclosures are constructed from Makrolon 9425.



Amp Rating	Catalog Number		Shipping Weight①	Horsepower Ratings			
				240V AC		480V AC	600V AC
	3 Pole, 3 Wire	3 Pole, 3 Wire with (1) NO & (1) NC Aux. Contact⑤⑥		1 Phase	3 Phase	3 Phase	3 Phase
Non-Fusible, Type 1, 4X & 12K② with Black Rotary Handle 600V AC Max.							
16	**3LD2064-0TB51-0US2**	**3LD2064-1GP51-0US2**	1	1½	3	7½	10
25	**3LD2164-0TB51-0US2**	**3LD2164-1GP51-0US2**	1	3	7½	10	15
30	**3LD2264-0TB51-0US2**	**3LD2264-1GP51-0US2**	1	3	7½	15	20
30	—	**3LD2264-1TS51-0US2③▲**	1	3	7½	15	20
30	—	**3LD2264-2TW51-0US2④▲**	1	3	7½	15	20
63	**3LD2565-0TB51-0US2**	**3LD2565-1GP51-0US2▲**	3	10	15	40	50
100	**3LD2766-0TB51-0US2**	**3LD2766-1GP51-0US2▲**	6	—	30	60	75
125	**3LD2866-0TB51-0US2**	**3LD2866-1GP51-0US2▲**	6	—	40	75	100
Non-Fusible, Type 1, 4X & 12K② with Red and Yellow Rotary Handle 600V AC Max.							
16	**3LD2064-0TB53-0US2**	**3LD2064-1GP53-0US2**	1	1½	3	7½	10
25	**3LD2164-0TB53-0US2**	**3LD2164-1GP53-0US2**	1	3	7½	10	15
30	**3LD2264-0TB53-0US2**	**3LD2264-1GP53-0US2**	1	3	7½	15	20
30	—	**3LD2264-1TS53-0US2③▲**	1	3	7½	15	20
30	—	**3LD2264-2TW53-0US2④▲**	1	3	7½	15	20
63	**3LD2565-0TB53-0US2**	**3LD2565-1GP53-0US2▲**	3	10	15	40	50
100	**3LD2766-0TB53-0US2▲**	**3LD2766-1GP53-0US2▲**	6	—	30	60	75
125	**3LD2866-0TB53-0US2▲**	**3LD2866-1GP53-0US2▲**	6	—	40	75	100

▲ Built to order. Allow 6–8 weeks for delivery.
① Carton quantity of (1). Shipping weight in pounds (lbs.).
② Approved for indoor/outdoor use. No cover interlock provided.
③ Switch is supplied with (2) NO and no NC aux. contacts.
④ Switch is supplied with (4) NO and no NC aux. contacts. Ground bar is not provided or available.
⑤ Aux. contacts break about 3 Ms before and make about 3 Ms after main switch contacts.
⑥ 6P, 25A, switch with 1 NO & 1 NC aux. contacts and a black operating handle is also available. Order catalog number **3LD2165-4VD51** (Discount Code: Pilot Devices).

Enclosed Disconnect Switch Dimensions (Inches)

Catalog Number	Ampere Rating	Dimensions			
		A	B	C	D
3LD2064-	16	5.52③	3.94	3.19	4.57
3LD2164-	25	5.52③	3.94	3.19	4.57
3LD2264-	30	5.52③	3.94	3.19	4.57
3LD2565-	63	6.93③	5.75	4.10	5.87
3LD2766-	100	11.90	8.35	5.36	7.13
3LD2866-	125	11.90	8.35	5.36	7.13

Note: 3LD2 Type switches only have top and bottom end KOs as follows: 16-30A - 1/2" & 3/4", 63A - 3/4" & 1", 100 & 25A - 1" & 1 1/4"

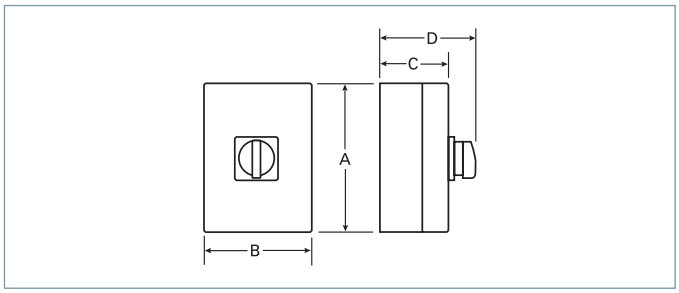

UL and CUL Short Circuit Withstand Ratings③

Ampere Rating	Short Circuit Withstand Rating and Fuse Class				
	With Line Side Fusing			With Load Side Fusing①	
	5 kA at 600V Max	10 kA at 600V Max	18 kA at 480V Max	5 kA at 480V Max	18 kA at 480V Max
16	RK5 (50A Max)	—	—	—	—
25 & 30	RK5 (80A Max)	—	—	—	—
63	RK5 (175A Max)	—	—	—	—
100 & 125	—	RK5 (200A Max)	—	—	—

Wire ranges 60/75°C Cu Only②

16 Amps	(1) #18-10 AWG
25–30 Amps	(1) #14-10 AWG
63 Amps	(1) #14-6 AWG
100–125 Amps	(1) #12-1 AWG

IEC Fuse and Withstand Ratings

Ampere Rating	gG Fuse Size	Short Circuit Rating
16	20A	5k Arms
25	25A	10k Arms
32	50A	10k Arms
63	63A	15k Arms
100	100A	20k Arms
125	125A	20k Arms

Accessories②

Switch Ampere Rating	Catalog Number	Description
16–30A	**3LD9220-2C**	Neutral Kit
63A	**3LD9250-2CA**	Neutral Kit
100–125A	**3LD9280-2C**	Neutral Kit

① For use as supplemental protection on the load side of the branch circuit over current protective device.
② Factory installed ground lugs supplied as follows: 16-30A #14-10 Cu, 63A #14-8 Cu. Ground lug not provided and is not available on catalog numbers 3LD2264-2TW51-0US2 and 3LD2264-2TW53-0US2.
③ 6.38 inches high including mounting feet.
④ 7.85 inches high including mounting feet.
⑤ 16-63A 3LD switches are also rated 5kA at 600VAC max when protected by a 3RV type MSP of the same or lesser ampere rating.

For enclosed bolted pressure contact switches order as lug-in/lug-out single section BPS main switchboards using either the SPACE 2000 Switchboard EPM or COMPAS.

VBII Safety Switch Replacement Parts

Ampere Rating	Line Base Catalog Number	Load Base Catalog Number	Handle / Handle Guard General Duty Catalog Number	Handle / Handle Guard Heavy Duty Catalog Number
Fusible 2- and 3-Pole 60-600A General Duty & 30-1200A Heavy Duty⑤⑧				
30 HD 240V	**HFB21②**	**HBB21②**	—	**HH6123⑦**
60 HD 240V	**HFB22②**	**HBB22②**	—	**HH6123⑦**
30 600V	**HFB612②**	**HBB612②**	—	**HH6123⑦**
60 600V	**HFB62②**	**HBB62②**	—	**HH6123⑦**
100	**HFB63②**	**HBB63②**	**GH223**	**HH6123⑦**
200	**HFB64②**	**HBB64②**	**GH24**	**HH64⑦**
400 (Legacy)	**HFB65③⑥**	**HBB656③⑥**	**HH65678**	**HH65678⑦**
400 (Series-A)	**HFB65AB**	**HBB656AB**	**HH656A**	**HH656A**
600 (Legacy)	**HFB66③⑥**	**HBB656③⑥**	**HH65678**	**HH65678⑦**
600 (Series-A)	**HFB66AB**	**HBB656AB**	**HH656A**	**HH656A**
800	**HFB67A②⑥**	**HBB67A②⑥**	—	**HH65678⑦**
1200	**HFB68②⑥**	**HBB68②⑥**	—	**HH68⑦**
Non-Fusible 3-Pole 60-600A General Duty & 30-1200A Heavy Duty⑤⑧				
30 HD	**HNB612②**	—	—	**HH6123⑦**
60 HD	**HNB623②**	—	—	**HH6123⑦**
100	**HNB623②**	—	**GH223**	**HH6123⑦**
200	**HNB64②**	—	**GH24**	**HH64⑦**
400 (Legacy)	**HNB65③⑥**	—	**HH65678**	**HH65678⑦**
400 (Series-A)	**HNB656AB**	—	**HH656A**	**HH656A**
600 (Legacy)	**HNB66③⑥**	—	**HH65678**	**HH65678⑦**
600 (Series-A)	**HNB656AB**	—	**HH656A**	**HH656A**
800	**HNB67A②⑥**	—	—	**HH65678⑦**
1200	**HNB678⑥**	—	—	**HH68⑦**

Ampere Rating	Mechanism Assembly Catalog Number	Line & Load Lugs Catalog Number
Fusible 2- and 3-Pole 60-600A General Duty & 30-1200A Heavy Duty⑤⑧		
30 HD 240V	**HM6123⑦**	**HL612①**
60 GD	**HM6123**	**HL612①**
60 HD 240V	**HM6123⑦**	**HL612①**
30 600V	**HM6123⑦**	**HL612①**
60 600V	**HM6123⑦**	**HL612①**
100	**HM6123⑦**	**HL63①**
200	**HM64⑦**	**HL64①**
400 (Legacy)	**HM65**	**HL65678⑦**
400 (series-A)	**HM656A**	**HL656A⑩**
600 (Legacy)	**HM66**	**HL65678④**
600 (series-A)	**HM656A**	**HL66A⑩**
800	**HM67A**	⑨
1200	**HM678**	⑨
Non-Fusible 3-Pole 60-600A General Duty & 30-1200A Heavy Duty⑤⑧		
30 HD	**HH6123A⑦**	**HL612①**
60 GD	**HM6123**	**HL612①**
60 HD	**HH6123A⑦**	**HL612①**
100	**HM6123⑦**	**HL63①**
200	**HM64⑦**	**HL64①**
400 (Legacy)	**HM65**	**HL65678④**
400 (series-A)	**HM656A**	**HL56A⑩**
600 (Legacy)	**HM66**	**HL65678④**
600 (series-A)	**HM656A**	**HL56A⑩**
800	**HM67A**	⑨
1200	**HM678**	⑨

① Three lugs included in kit.
② Includes lugs.
③ Lugs not included.
④ One lug per kit.
⑤ One per switch required unless otherwise noted.
⑥ One required per pole.
⑦ For type 4/4X stainless steel switches add "S" to end of catalog number.
⑧ For replacement door for heavy duty switches add "DOOR" to end of switch catalog number.
⑨ Lugs included with base only, not available separately.
⑩ Lug caps only—2 line side caps and 2 load side caps per kit.

Typical Control with Wiring for R1 (120VAC) Option

TO CONNECT THE BATTERY LOWERING FOR HYDRAULIC ELEVATORS,CONNECT TO POINTS NC AND COM. REQUIRED FOR HYDRAULIC ELEVATORS WITH AUTO RECALL AND LOWERING TO MEET NEC 2023 SECTION 620.91(c)

AUXILIARY SWITCH LOGIC						
MAIN SWITCH	TB 10 & 11		TB 10 &11*		TB 13 & 14	
POSITION	NO	NC	NO	NC	NO	NC
CLOSED	O	C	O	C	O	C
TRIPPED	C	C	C	O	O	C
OPEN	C	O	C	O	C	O

*AUXILIARY SWITCH LOGIC WHEN YELLOW WIRE IS REMOVED FROM TERMINAL TB10 AND LOOSE END IS PROPERLY INSULATED.
WHERE LOCAL AUTHORITIES HAVING JURISDICTION PERMIT, FIELD REMOVAL OF THE YELLOW WIRE WILL CHANGE THE SWITCH LOGIC, SEE THE AUXILIARY SWITCH LOGIC TABLE, REMOVAL HAS THE EFFECT OF DISABLING THE BATTERY LOWERING DEVICE WHEN THE SWITCH IS IN THE TRIPPED POSITION. FIELD INSTALLER MUST ENSURE THIS MEETS ALL LOCAL CODES BEFORE REMOVAL.

INTERNAL DISC. SWITCH ACCESSORY IS SHOWN WITH MAIN SWITCH IN CLOSED (ON) POSITION

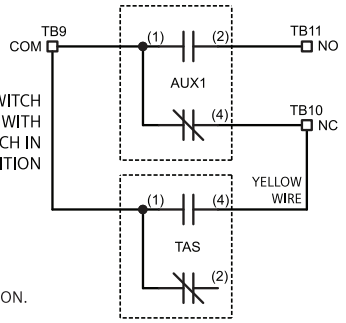

TO MONITOR THE VOLTAGE THE CONTROL WIRING TO MEET NFPA 72-2022 SECTION 21.4.4
FOR SPECIAL WIRING OF MULTIPLE SWITCHES TO AVOID FEEDBACK FROM PARALLELING CONTACTS. SEE LADDER DIAGRAM.
CONTACTS FOR "FR" ARE SHOWN IN THE DE-ENERGIZED POSITION.

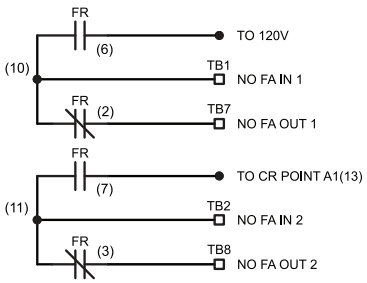

FIRE ALARM VOLTAGE MONITORING RELAY

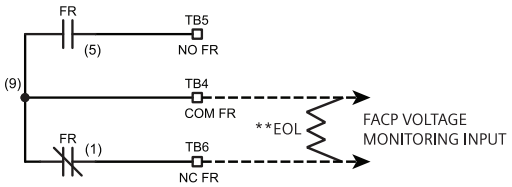

**COMMON CONNECTION WHEN NOT CONNECTING TO TB12, 13 AND 14. CONNECTION FOR WHEN A SUPERVISORY SIGNAL IS REQUIRED WHEN THE MAIN SWITCH IS IN THE OPEN POSITION SIGNAL, OR WHEN THE MAIN SWITCH IS CLOSED (ON) AND CONTROL POWER IS LOST.
CONTACTS FOR "FR" ARE SHOWN IN THE DE-ENERGIZED POSITION.

VOLTAGE MONITORING

THIS CIRCUIT CAN BE USED TO MAINTAIN A NORMAL STATUS SIGNAL TO THE FACP.
COM FR AND COM (B) ARE FACTORY BONDED WITH AN ORANGE JUMPER TO BYPASS THE VOLTAGE SUPERVISORY SIGNAL WHEN THE SWITCH IS MOVED TO THE OPEN "OFF" POSITION.
FIELD CONNECTION OF END OF LINE RESISTOR IS REQUIRED BETWEEN NC FR AND NC B FOR THIS FEATURE TO FUNCTION.
IF A SUPERVISORY SIGNAL IS REQUIRED WHEN THE SWITCH IS TURNED TO THE OFF POSITION. THE END OF LINE (EOL) RESISTOR MAY BE CONNECTED BETWEEN COM FR AND NC FR.
REMOVAL OF THE JUMPER IS ALLOWED IF THE AUTHORITY HAVING JURISDICTION DOES NOT REQUIRE THIS FUNCTIONALITY.
CONTACTS FOR "FR" ARE SHOWN IN THE DE-ENERGIZED POSITION.

EXTERNAL MICRO SWITCH IS SHOWN WITH MAIN SWITCH IN CLOSED (ON) POSITION

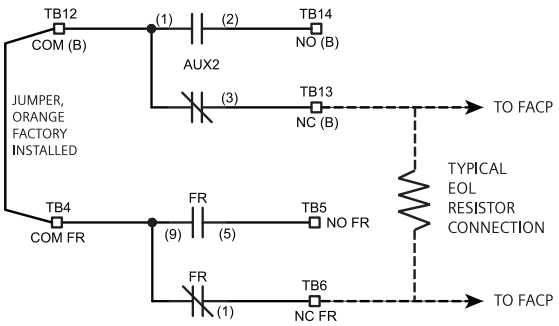

TYPICAL CONTROL POWER TRANSFORMER WIRING OPTIONS

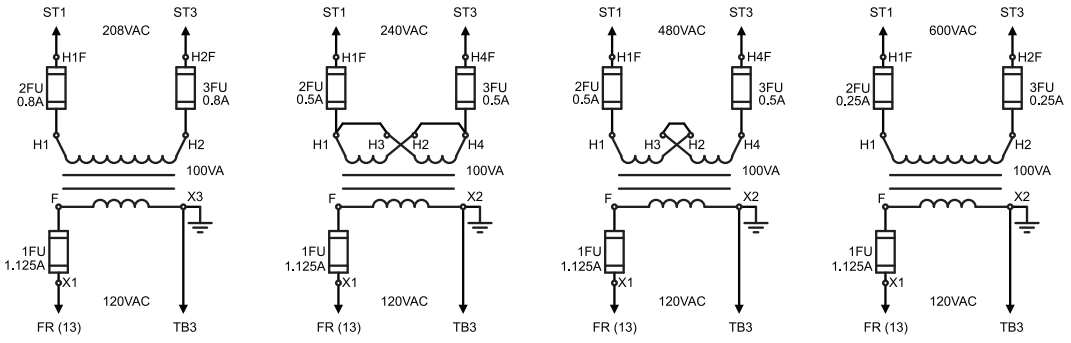

Typical Control with Wiring for R1 (120VAC) Option

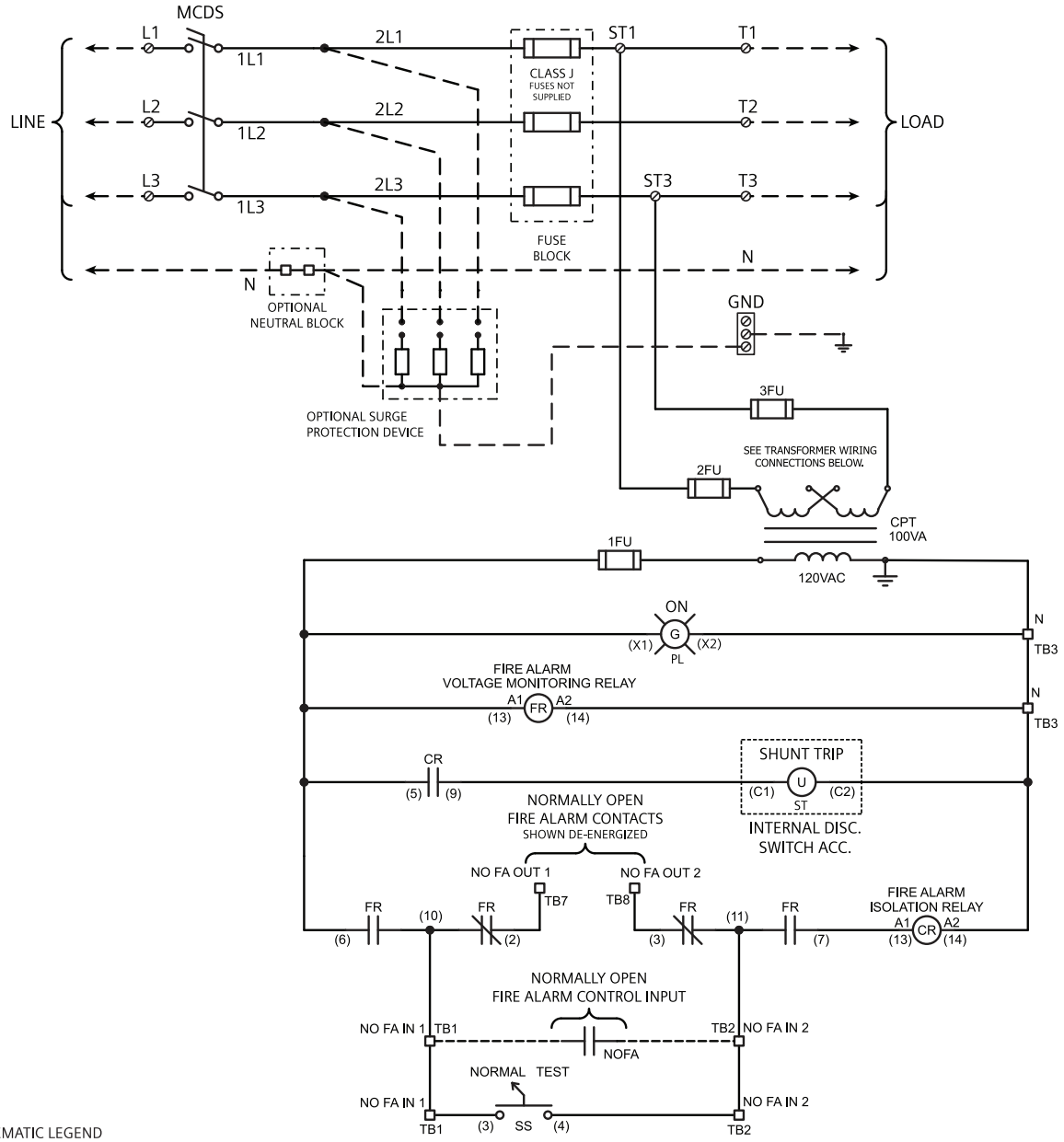

SCHEMATIC LEGEND
FACP - FIRE ALARM CONTROL PANEL.
NO FA IN - NORMALLY OPEN FIRE ALARM CONTROL INPUT.
NO FA - NORMALLY OPEN FIRE ALARM CONTACTS SUPPLIED FROM THE FIRE ALARM SYSTEM TO INITIATE THE SHUNT TRIP.
MCDS - MOLDED CASE DISCONNECT SWITCH
ST - SHUNT TRIP SOLENOID FOR REMOTE TRIP OF SWITCH, WHICH IS ACTIVATED BY THE CLOSING OF THE FIRE ALARM CONTACTS OR KEYED TEST SWITCH.
CR - CONTROL RELAY USED TO ISOLATE THE N.O.F.A. CONTACTS FROM THE DUTY OF THE SHUNT TRIP. MAX. CONTACT RATING 15A@300VAC.
FR - FIRE ALARM VOLTAGE MONITORING RELAY USED TO MONITOR THE STATUS OF THE CONTROL VOLTAGE FROM A REMOTE LOCATION (i.e. FIRE ALARM CONTROL PANEL). MAX. CONTACT RATING 15A@300VAC.
PL - PILOT LIGHT TO VISUALLY INDICATE PRESENCE OF VOLTAGE ON OUTSIDE OF SWITCH ENCLOSURE.
CPT - CONTROL POWER TRANSFORMER USED TO STEP DOWN LINE VOLTAGE TO 120VAC TO POWER SHUNT TRIP COIL.
TAS - TRIP/BELL ALARM SWITCH INTERNAL TO MAIN DISCONNECT SWITCH. MAX. CONTACT RATING 3A@300VAC.
AUX1 - AUXILARY CONTACTS INTERNAL TO MAIN DISCONNECT SWITCH. MAX. CONTACT RATING 3A@300VAC.
AUX2 - MICRO SWITCH CONTACTS EXTERNAL TO MAIN DISCONNECT SWITCH - CONTACT USED TO DISABLE BATTERY LOWERING DEVICE. MAX. CONTACT RATING 5.6A@125VAC.
SS - KEY-TO-TEST SWITCH USED TO OPERATE SHUNT TRIP FROM THE OUTSIDE OF SWITCH ENCLOSURE. CAN BE USED FOR TROUBLE-SHOOTING AND INSPECTION.

□ - TERMINAL BLOCK CONNECTION
● - PRE-WIRED CONNECTION POINTS.
---------- - DEVICE INTERNAL TO MOLDED CASE DISCONNECT SWITCH

Typical Control with Wiring for R2 (24VDC) Option

TO CONNECT THE BATTERY LOWERING FOR HYDRAULIC ELEVATORS,CONNECT TO POINTS NC AND COM. REQUIRED FOR HYDRAULIC ELEVATORS WITH AUTO RECALL AND LOWERING TO MEET NEC 2023 SECTION 620.91(c)

AUXILIARY SWITCH LOGIC						
MAIN SWITCH	TB 10 & 11		TB 10 &11*		TB 13 & 14	
POSITION	NO	NC	NO	NC	NO	NC
CLOSED	O	C	O	C	O	C
TRIPPED	C	C	C	O	O	C
OPEN	C	O	C	O	C	O

*AUXILIARY SWITCH LOGIC WHEN YELLOW WIRE IS REMOVED FROM TERMINAL TB10 AND LOOSE END IS PROPERLY INSULATED.
WHERE LOCAL AUTHORITIES HAVING JURISDICTION PERMIT, FIELD REMOVAL OF THE YELLOW WIRE WILL CHANGE THE SWITCH LOGIC, SEE THE AUXILIARY SWITCH LOGIC TABLE, REMOVAL HAS THE EFFECT OF DISABLING THE BATTERY LOWERING DEVICE WHEN THE SWITCH IS IN THE TRIPPED POSITION. FIELD INSTALLER MUST ENSURE THIS MEETS ALL LOCAL CODES BEFORE REMOVAL.

INTERNAL DISC. SWITCH ACCESSORY IS SHOWN WITH MAIN SWITCH IN CLOSED (ON) POSITION

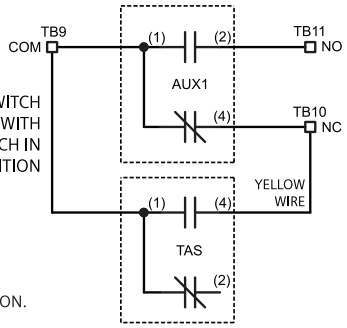

TO MONITOR THE VOLTAGE THE CONTROL WIRING TO MEET NFPA 72-2022 SECTION 21.4.4
FOR SPECIAL WIRING OF MULTIPLE SWITCHES TO AVOID FEEDBACK FROM PARALLELING CONTACTS. SEE LADDER DIAGRAM.
CONTACTS FOR "FR" ARE SHOWN IN THE DE-ENERGIZED POSITION.

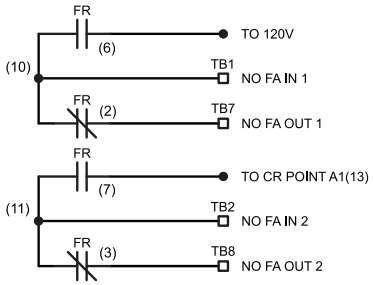

FIRE ALARM VOLTAGE MONITORING RELAY

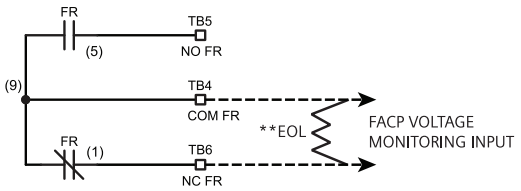

**COMMON CONNECTION WHEN NOT CONNECTING TO TB12, 13 AND 14. CONNECTION FOR WHEN A SUPERVISORY SIGNAL IS REQUIRED WHEN THE MAIN SWITCH IS IN THE OPEN POSITION SIGNAL, OR WHEN THE MAIN SWITCH IS CLOSED (ON) AND CONTROL POWER IS LOST.
CONTACTS FOR "FR" ARE SHOWN IN THE DE-ENERGIZED POSITION.

VOLTAGE MONITORING

THIS CIRCUIT CAN BE USED TO MAINTAIN A NORMAL STATUS SIGNAL TO THE FACP.
COM FR AND COM (B) ARE FACTORY BONDED WITH AN ORANGE JUMPER TO BYPASS THE VOLTAGE SUPERVISORY SIGNAL WHEN THE SWITCH IS MOVED TO THE OPEN "OFF" POSITION.
FIELD CONNECTION OF END OF LINE RESISTOR IS REQUIRED BETWEEN NC FR AND NC B FOR THIS FEATURE TO FUNCTION.
IF A SUPERVISORY SIGNAL IS REQUIRED WHEN THE SWITCH IS TURNED TO THE OFF POSITION. THE END OF LINE (EOL) RESISTOR MAY BE CONNECTED BETWEEN COM FR AND NC FR.
REMOVAL OF THE JUMPER IS ALLOWED IF THE AUTHORITY HAVING JURISDICTION DOES NOT REQUIRE THIS FUNCTIONALITY.
CONTACTS FOR "FR" ARE SHOWN IN THE DE-ENERGIZED POSITION.

EXTERNAL MICRO SWITCH IS SHOWN WITH MAIN SWITCH IN CLOSED (ON) POSITION

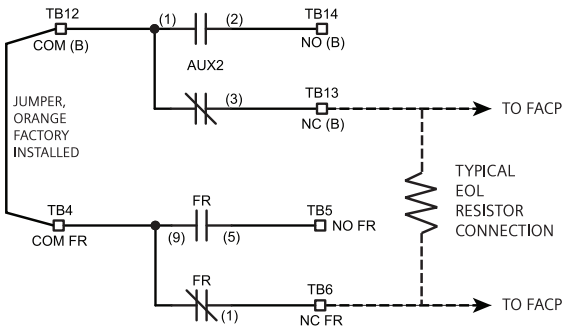

TYPICAL CONTROL POWER TRANSFORMER WIRING OPTIONS

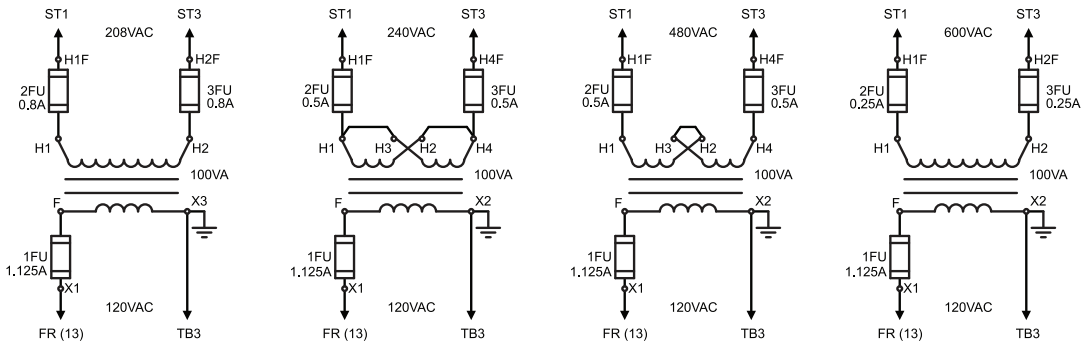

Typical Control with Wiring for R2 (24VDC) Option

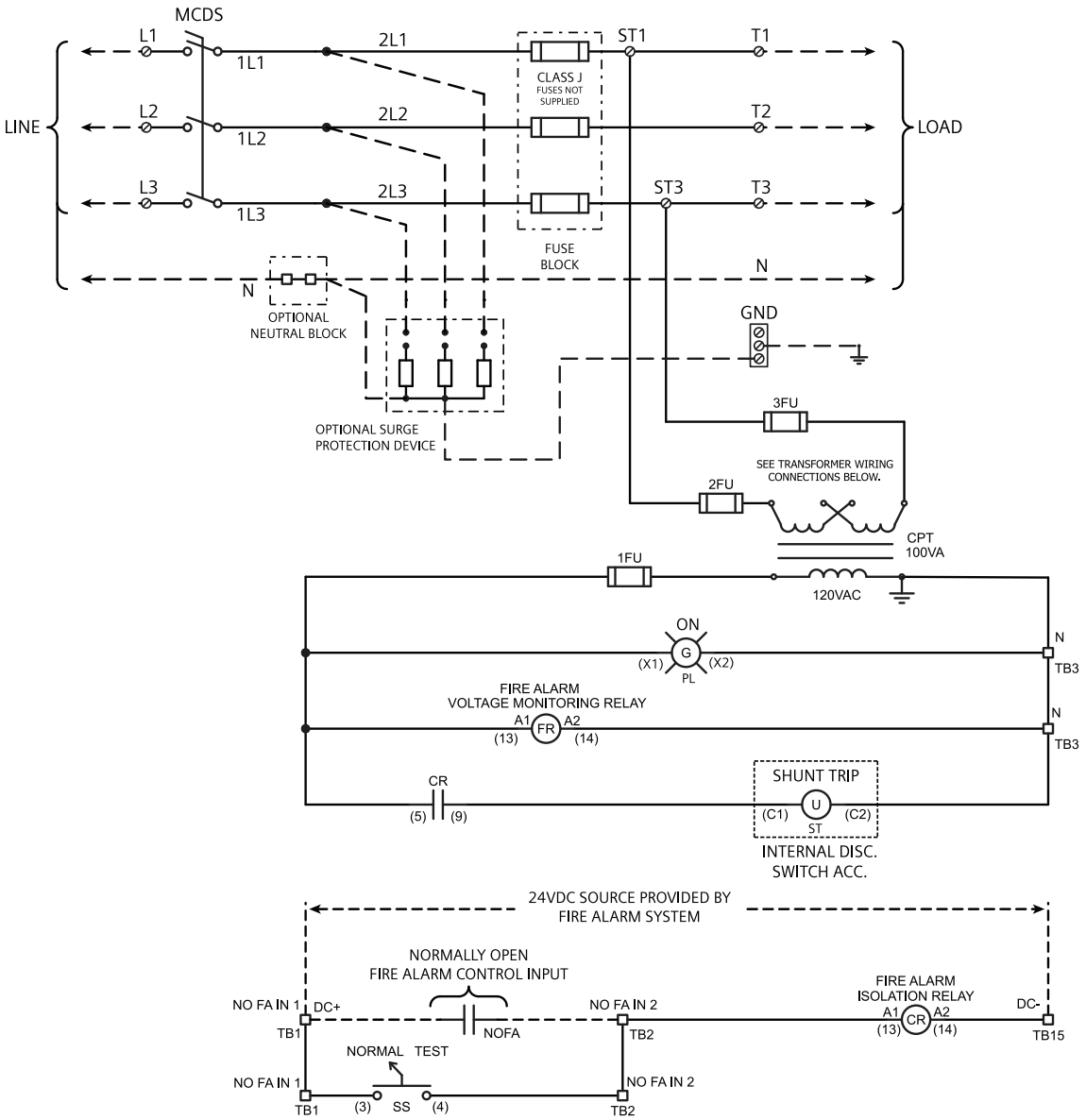

SCHEMATIC LEGEND
FACP - FIRE ALARM CONTROL PANEL.
NO FA IN - NORMALLY OPEN FIRE ALARM CONTROL INPUT.
NO FA - NORMALLY OPEN FIRE ALARM CONTACTS SUPPLIED FROM THE FIRE ALARM SYSTEM TO INITIATE THE SHUNT TRIP.
MCDS - MOLDED CASE DISCONNECT SWITCH
ST - SHUNT TRIP SOLENOID FOR REMOTE TRIP OF SWITCH, WHICH IS ACTIVATED BY THE CLOSING OF THE FIRE ALARM CONTACTS OR KEYED TEST SWITCH.
CR - CONTROL RELAY USED TO ISOLATE THE N.O.F.A. CONTACTS FROM THE DUTY OF THE SHUNT TRIP. MAX. CONTACT RATING 15A@300VAC.
FR - FIRE ALARM VOLTAGE MONITORING RELAY USED TO MONITOR THE STATUS OF THE CONTROL VOLTAGE FROM A REMOTE LOCATION (i.e. FIRE ALARM CONTROL PANEL). MAX. CONTACT RATING 15A@300VAC.
PL - PILOT LIGHT TO VISUALLY INDICATE PRESENCE OF VOLTAGE ON OUTSIDE OF SWITCH ENCLOSURE.
CPT - CONTROL POWER TRANSFORMER USED TO STEP DOWN LINE VOLTAGE TO 120VAC TO POWER SHUNT TRIP COIL.
TAS - TRIP/BELL ALARM SWITCH INTERNAL TO MAIN DISCONNECT SWITCH. MAX. CONTACT RATING 3A@300VAC.
AUX1 - AUXILARY CONTACTS INTERNAL TO MAIN DISCONNECT SWITCH. MAX. CONTACT RATING 3A@300VAC.
AUX2 - MICRO SWITCH CONTACTS EXTERNAL TO MAIN DISCONNECT SWITCH - CONTACT USED TO DISABLE BATTERY LOWERING DEVICE. MAX. CONTACT RATING 5.6A@125VAC.
SS - KEY-TO-TEST SWITCH USED TO OPERATE SHUNT TRIP FROM THE OUTSIDE OF SWITCH ENCLOSURE. CAN BE USED FOR TROUBLE-SHOOTING AND INSPECTION.

□ - TERMINAL BLOCK CONNECTION
● - PRE-WIRED CONNECTION POINTS.
---------- - DEVICE INTERNAL TO MOLDED CASE DISCONNECT SWITCH

Typical Control with Wiring Options for Fire Safety Interface

Options R1 & F3

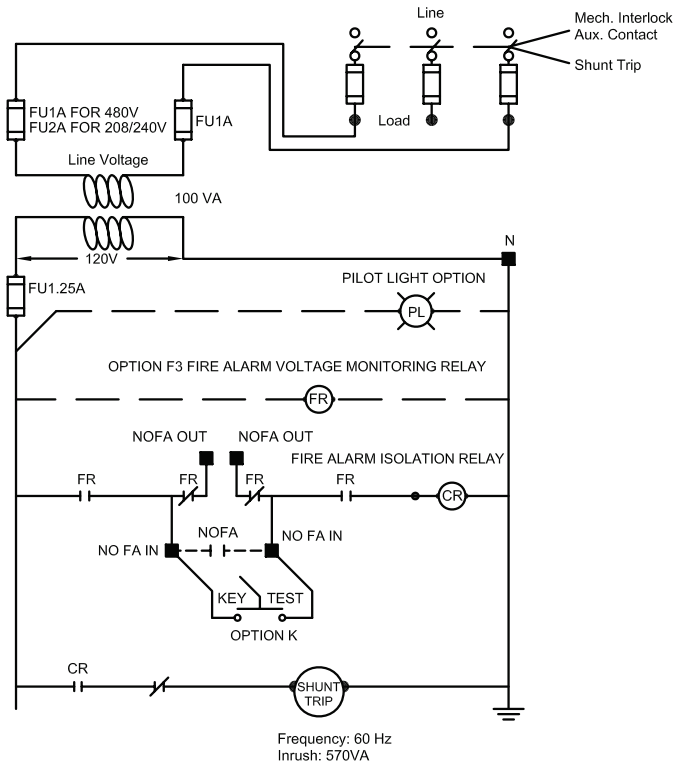

Frequency: 60 Hz
Inrush: 570VA

Option R2

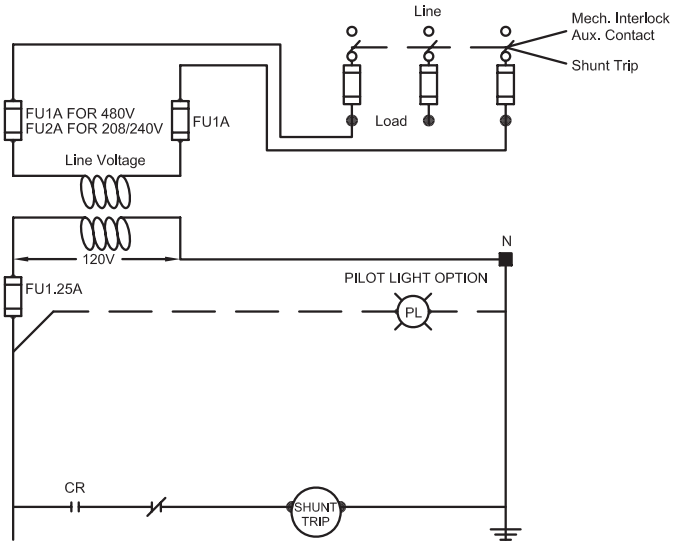

Frequency: 60 Hz
Inrush: 570VA

AUXILIARY SWITCH LOGIC						
MAIN SWITCH	OPTION A		OPTION B		OPTION A *	
POSITION	NO	NC	NO	NC	NO	NC
CLOSED	O	C	O	C	O	C
TRIPPED	C	C	O	C	C	O
OPEN	C	O	C	O	C	O

* AUXILIARY SWITCH LOGIC WHEN BLUE WIRE WITH "+" MARKER IS REMOVED FROM NC TERMINAL

WHERE LOCAL AUTHORITIES HAVING JURISDICTION PERMIT, FIELD REMOVAL OF THE BLUE WIRE IDENTIFIED BY "+" MARKER WILL CHANGE THE OPTION A SWITCH LOGIC, SEE THE AUXILARY SWITCH LOGIC TABLE, REMOVAL HAS THE EFFECT OF DISABLING THE BATTERY LOWERING DEVICE WHEN THE SWITCH IS IN THE TRIPPED POSITION. FIELD INSTALLER MUST ENSURE THIS MEETS ALL LOCAL CODES BEFORE REMOVAL.

LEGEND:
FACP - FIRE ALARM CONTROL PANEL
NOFAIN - NORMALLY OPEN FIRE ALARM CONTROL INPUT.
NOFA - NORMALLY OPEN FIRE ALARM CONTACTS SUPPLIED FROM THE FIRE ALARM SYSTEM TO INITIATE THE SHUNT TRIP.
SHUNT TRIP - SOLENOID FOR REMOTE TRIP OF SWITCH, WHICH IS ACTIVATED BY THE CLOSING OF THE FIRE ALARM CONTACTS OR KEY TEST SWITCH.
OPTION R1 - FIRE ALARM INTERFACE RELAY THAT IS OPERATED AT 120VAC FROM SECONDARY OF TRANSFORMER. NO ADDITIONAL POWER NEEDED.
CR - CONTROL RELAY USED TO ISOLATE THE N.O.F.A. CONTACTS FROM THE DUTY OF THE SHUNT TRIP.
FR - FIRE ALARM VOLTAGE MONITORING RELAY USED TO MONITOR THE STATUS OF CONTROL VOLTAGE FROM A REMOTE LOCATION (i.e. FIRE ALARM CONTROL PANEL).
PL - PILOT LIGHT TO VISUALLY INDICATE PRESENCE OF VOLTAGE ON OUTSIDE OF SWITCH ENCLOSURE.
CPT - CONTROL POWER TRANSFORMER USED TO STEP DOWN LINE VOLTAGE TO 120VAC TO POWER SHUNT TRIP COIL.
SW AUX. - OPTION A OR B, NORMALLY CLOSED CONTACT WHEN SWITCH IS CLOSED. OPENS AS POWER SWITCH OPENS.
KEY TEST - KEY-TO-TEST SWITCH USED TO OPERATE SHUNT TRIP FROM THE OUTSIDE OF SWITCH ENCLOSURE. CAN BE USED FOR TROUBLE-SHOOTING AND INSPECTION.
MECHANICALLY INTERLOCKED AUXILIARY CONTACT - CONTACT USED TO DISABLE BATTERY LOWERING DEVICE.
■ - TERMINAL BLOCK CONNECTION POINT.
● - PRE-WIRED CONNECTION POINTS.

Typical Control with Wiring Options for Fire Safety Interface

Options R1 & F1

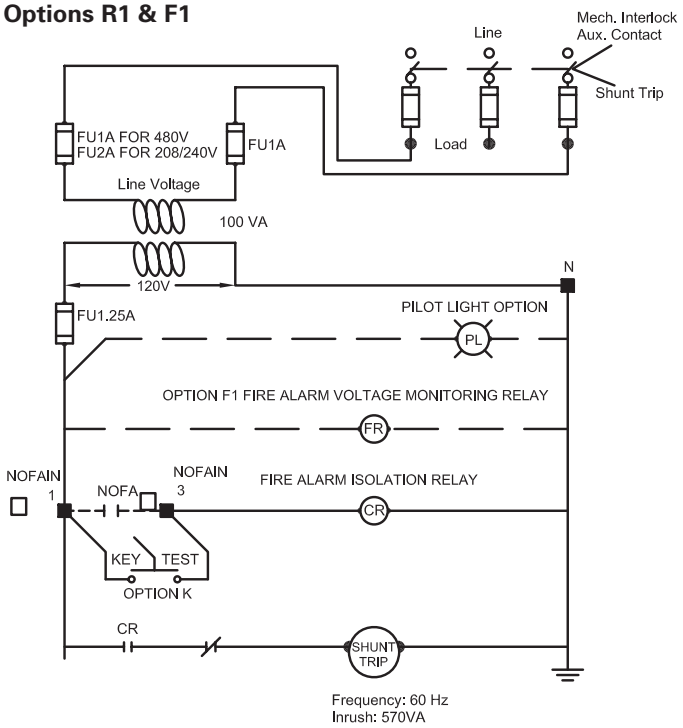

Options R2 & F1

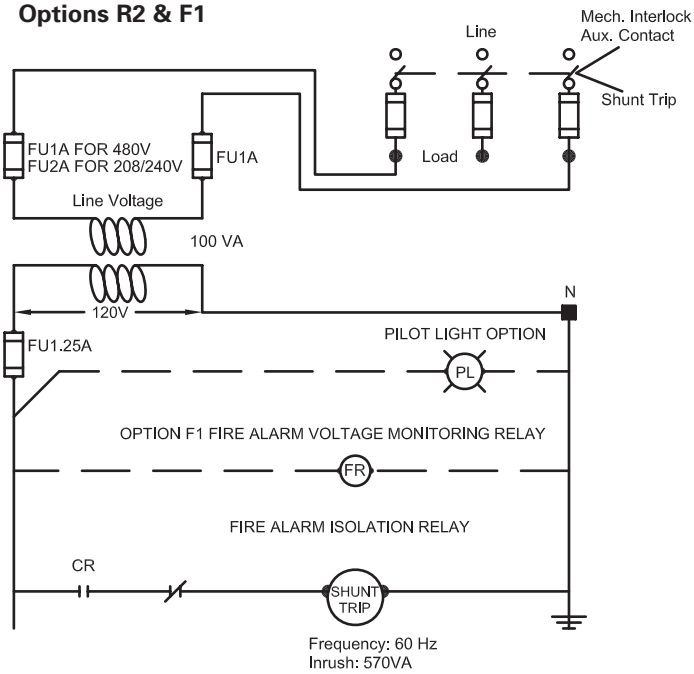

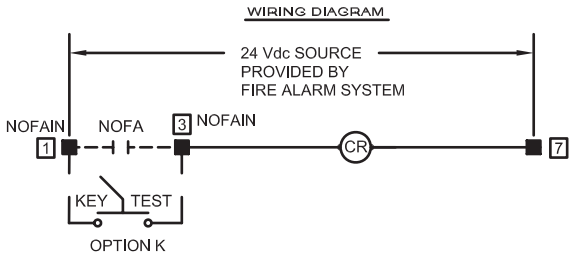

AUXILIARY SWITCH LOGIC						
MAIN SWITCH	OPTION A		OPTION B		OPTION A *	
POSITION	NO	NC	NO	NC	NO	NC
CLOSED	O	C	O	C	O	C
TRIPPED	C	C	O	C	C	O
OPEN	C	O	C	O	C	O

* AUXILIARY SWITCH LOGIC WHEN BLUE WIRE WITH "+" MARKER IS REMOVED FROM NC TERMINAL

WHERE LOCAL AUTHORITIES HAVING JURISDICTION PERMIT, FIELD REMOVAL OF THE BLUE WIRE IDENTIFIED BY "+" MARKER WILL CHANGE THE OPTION A SWITCH LOGIC, SEE THE AUXILARY SWITCH LOGIC TABLE, REMOVAL HAS THE EFFECT OF DISABLING THE BATTERY LOWERING DEVICE WHEN THE SWITCH IS IN THE TRIPPED POSITION. FIELD INSTALLER MUST ENSURE THIS MEETS ALL LOCAL CODES BEFORE REMOVAL.

LEGEND:
FACP - FIRE ALARM CONTROL PANEL
NOFAIN - NORMALLY OPEN FIRE ALARM CONTROL INPUT.
NOFA - NORMALLY OPEN FIRE ALARM CONTACTS SUPPLIED FROM THE FIRE ALARM SYSTEM TO INITIATE THE SHUNT TRIP.
SHUNT TRIP - SOLENOID FOR REMOTE TRIP OF SWITCH, WHICH IS ACTIVATED BY THE CLOSING OF THE FIRE ALARM CONTACTS OR KEY TEST SWITCH.
OPTION R1 - FIRE ALARM INTERFACE RELAY THAT IS OPERATED AT 120VAC FROM SECONDARY OF TRANSFORMER. NO ADDITIONAL POWER NEEDED.
CR - CONTROL RELAY USED TO ISOLATE THE N.O.F.A. CONTACTS FROM THE DUTY OF THE SHUNT TRIP.
FR - FIRE ALARM VOLTAGE MONITORING RELAY USED TO MONITOR THE STATUS OF CONTROL VOLTAGE FROM A REMOTE LOCATION (i.e. FIRE ALARM CONTROL PANEL).
PL - PILOT LIGHT TO VISUALLY INDICATE PRESENCE OF VOLTAGE ON OUTSIDE OF SWITCH ENCLOSURE.
CPT - CONTROL POWER TRANSFORMER USED TO STEP DOWN LINE VOLTAGE TO 120VAC TO POWER SHUNT TRIP COIL.
SW AUX. - OPTION A OR B, NORMALLY CLOSED CONTACT WHEN SWITCH IS CLOSED. OPENS AS POWER SWITCH OPENS.
KEY TEST - KEY-TO-TEST SWITCH USED TO OPERATE SHUNT TRIP FROM THE OUTSIDE OF SWITCH ENCLOSURE. CAN BE USED FOR TROUBLE-SHOOTING AND INSPECTION.
MECHANICALLY INTERLOCKED AUXILIARY CONTACT - CONTACT USED TO DISABLE BATTERY LOWERING DEVICE.
■ - TERMINAL BLOCK CONNECTION POINT.
● - PRE-WIRED CONNECTION POINTS.

Typical Control with Wiring Options for Fire Safety Interface

Option F1

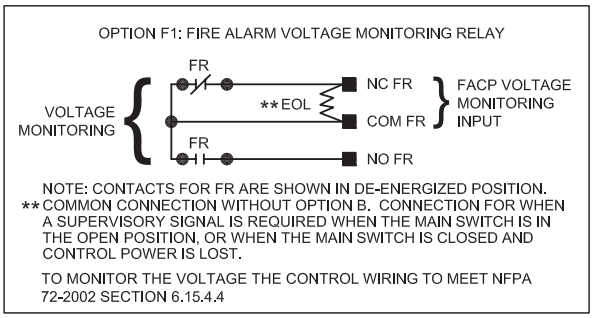

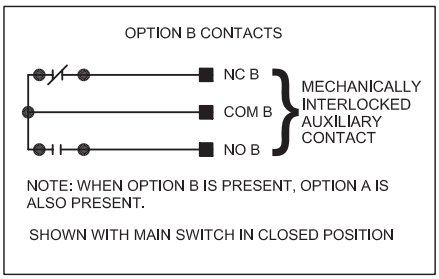

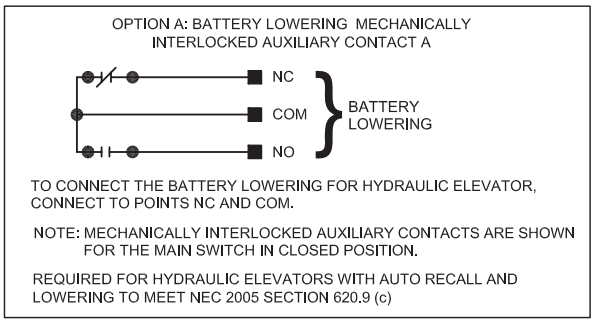

Option F3

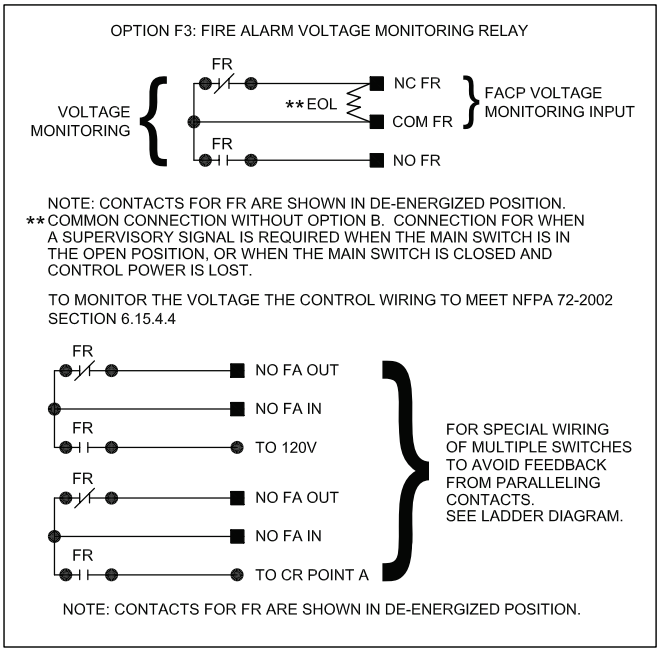

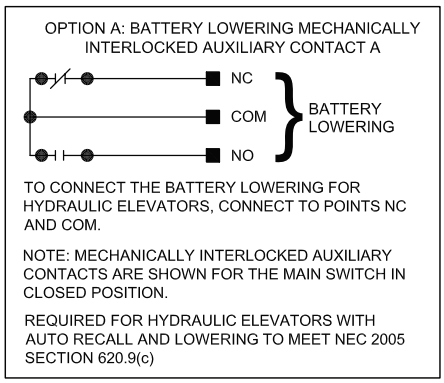

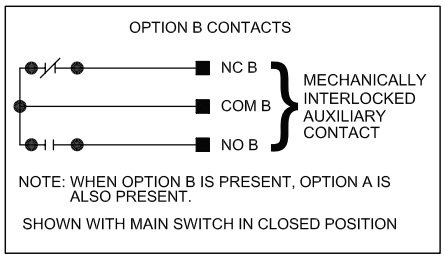

LEGEND:
FACP - FIRE ALARM CONTROL PANEL
NOFAIN - NORMALLY OPEN FIRE ALARM CONTROL INPUT.
NOFA - NORMALLY OPEN FIRE ALARM CONTACTS SUPPLIED FROM THE FIRE ALARM SYSTEM TO INITIATE THE SHUNT TRIP.
SHUNT TRIP - SOLENOID FOR REMOTE TRIP OF SWITCH, WHICH IS ACTIVATED BY THE CLOSING OF THE FIRE ALARM CONTACTS OR KEY TEST SWITCH.
OPTION R1 - FIRE ALARM INTERFACE RELAY THAT IS OPERATED AT 120VAC FROM SECONDARY OF TRANSFORMER. NO ADDITIONAL POWER NEEDED.
CR - CONTROL RELAY USED TO ISOLATE THE N.O.F.A. CONTACTS FROM THE DUTY OF THE SHUNT TRIP.
FR - FIRE ALARM VOLTAGE MONITORING RELAY USED TO MONITOR THE STATUS OF CONTROL VOLTAGE FROM A REMOTE LOCATION (i.e. FIRE ALARM CONTROL PANEL).
PL - PILOT LIGHT TO VISUALLY INDICATE PRESENCE OF VOLTAGE ON OUTSIDE OF SWITCH ENCLOSURE.
CPT - CONTROL POWER TRANSFORMER USED TO STEP DOWN LINE VOLTAGE TO 120VAC TO POWER SHUNT TRIP COIL.
SW AUX. - OPTION A OR B, NORMALLY CLOSED CONTACT WHEN SWITCH IS CLOSED. OPENS AS POWER SWITCH OPENS.
KEY TEST - KEY-TO-TEST SWITCH USED TO OPERATE SHUNT TRIP FROM THE OUTSIDE OF SWITCH ENCLOSURE. CAN BE USED FOR TROUBLE-SHOOTING AND INSPECTION.
MECHANICALLY INTERLOCKED AUXILIARY CONTACT - CONTACT USED TO DISABLE BATTERY LOWERING DEVICE.
■ - TERMINAL BLOCK CONNECTION POINT.
● - PRE-WIRED CONNECTION POINTS.

NOTE: TERMINAL 1 IS NOT PRESENT WHEN OPTION K IS ABSENT.

With optional control power transformer

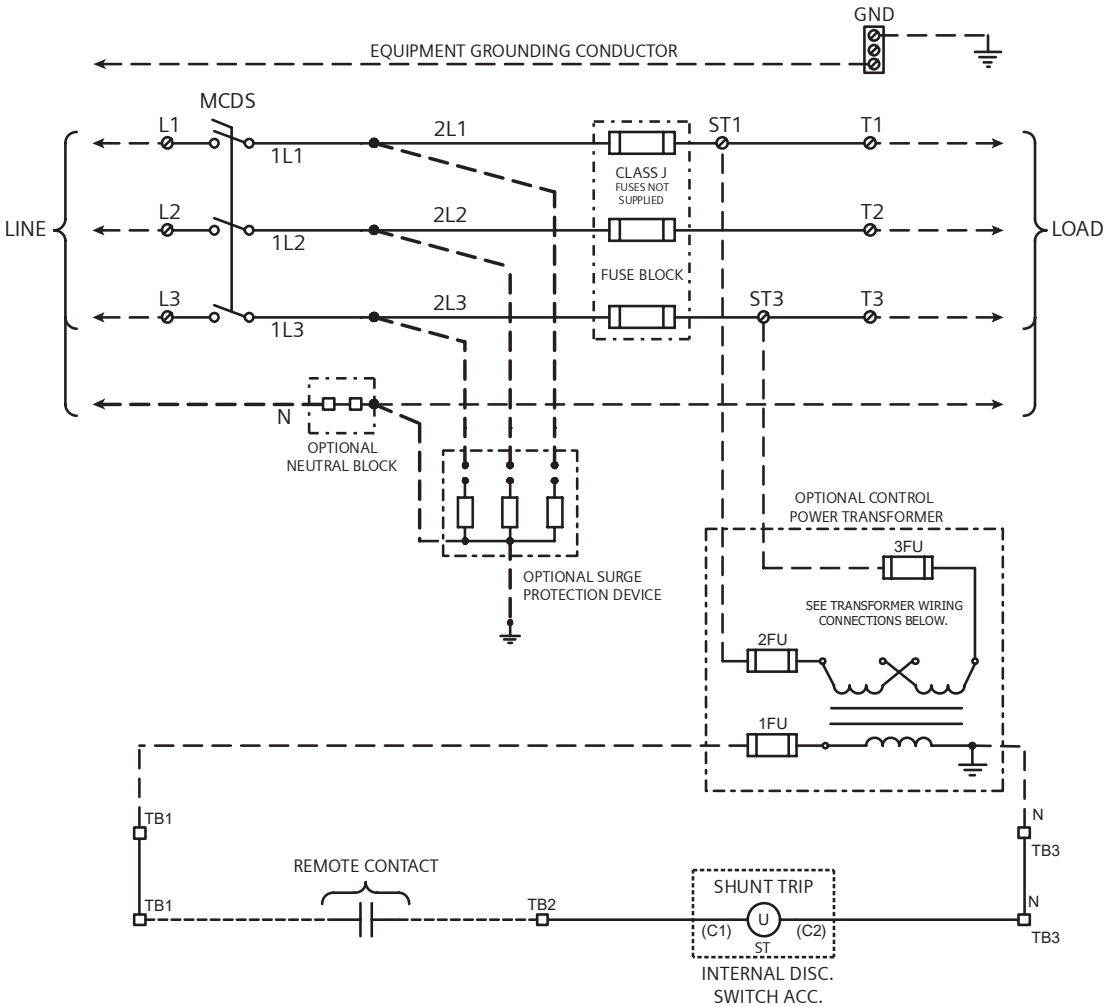

TYPICAL CONTROL POWER TRANSFORMER WIRING OPTIONS

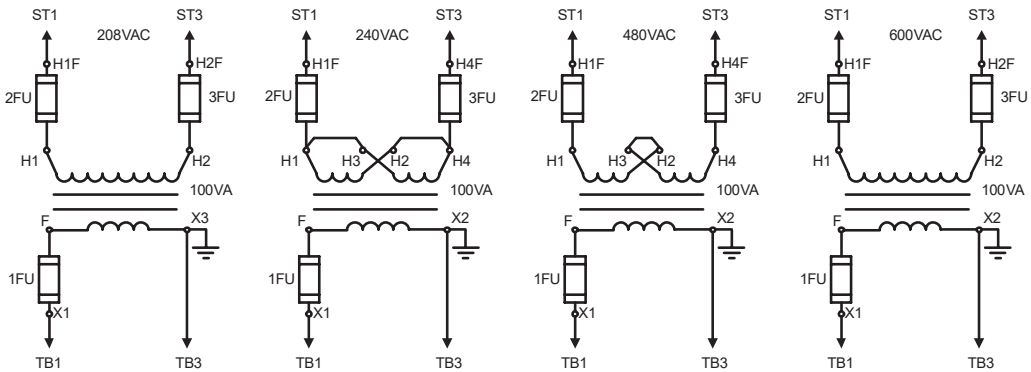

CONTROL POWER TRANSFORMER
MAX. FUSE AMPERAGE TABLE

100VA XFMR					
600V CLASS CC				250V TYPE TRM OR EQUIV.	
PRIMARY VOLTAGE				SECONDARY VOLTAGE	
208	240	480	600		
2.25	2	1	0.8	24VAC	6.25
				120VAC	1.3
2,3FU (AMPS)				1FU (AMPS)	

Refer to next page for schematic legends and notes.

With externally supplied control power

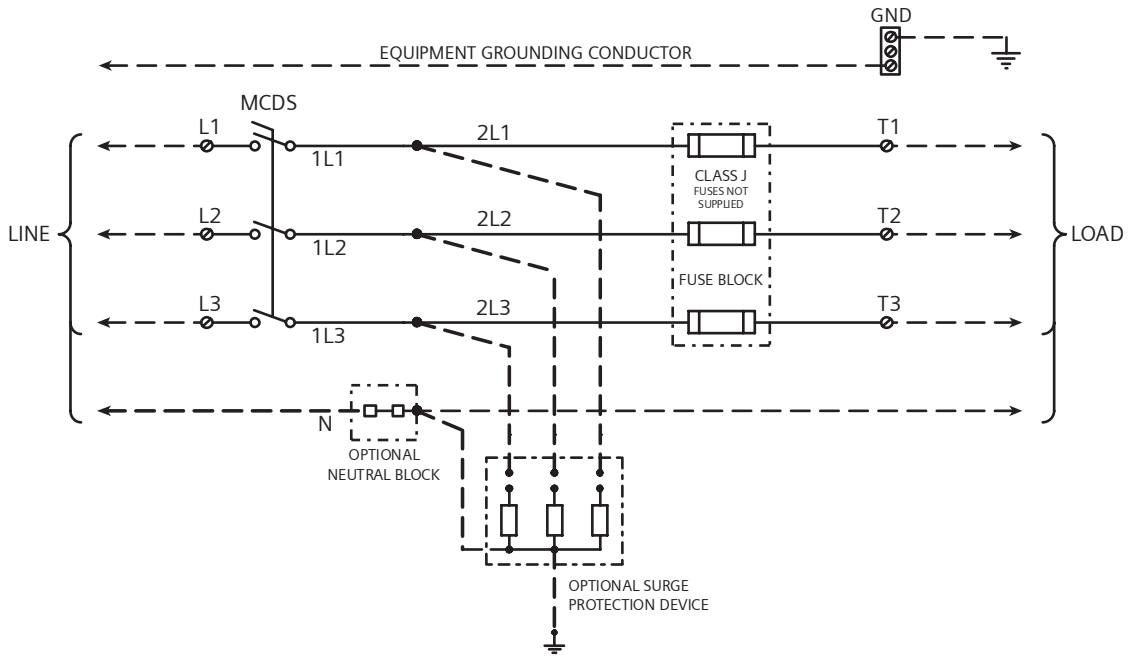

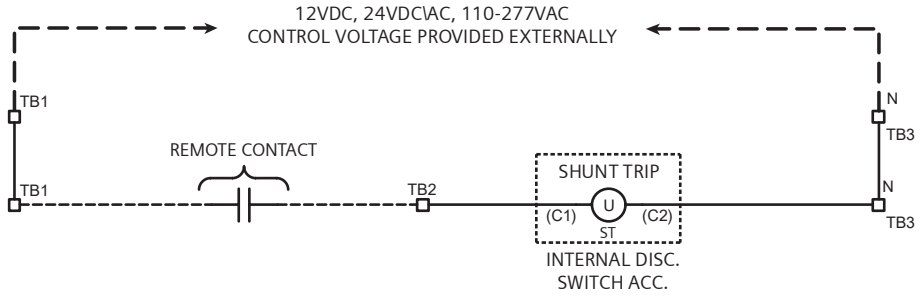

OPTIONAL SERVICE ENTRANCE PROVISIONS

FOR SERVICE ENTRANCE PURPOSES IN THE U.S. ONLY, THE CONTROLLER IS INTENDED FOR 4-WIRE, 3 PHASE SYSTEM (GROUNDED CENTER POINT OF WYE OR GROUNDED MID POINT OF ONE PHASE OF DELTA), WITHOUT PROVISIONS FOR A LOAD NEUTRAL AND THE LOAD IS CONNECTED LINE-TO-LINE.
REFER TO RATING LABEL FOR OPTIONAL NEUTRAL KIT FOR LINE TO NEUTRAL CONNECTIONS.
INSTALL SERVICE BARRIER KIT, (NOT INCLUDED) OVER LINE SIDE LUGS.
REFER TO TABLE BELOW FOR REQUIRED SERVICE LINE BARRIER KIT.

ENCLOSURE SIZE	LINE SIDE BARRIER KIT	w\ PROBE HOLES
30-100A	3VA9131-0WD30	3VA9131-0WD31
200-400A	3VA9471-0WD30	3VA9471-0WD31

SCHEMATIC LEGEND
MCDS - MOLDED CASE DISCONNECT SWITCH.
ST - SHUNT TRIP SOLENOID FOR REMOTE TRIP OF SWITCH, WHICH IS ACTIVATED BY THE CLOSING OF THE REMOTE CONTACT.
CPT - CONTROL POWER TRANSFORMER USED TO STEP DOWN LINE VOLTAGE TO 120VAC TO POWER SHUNT TRIP COIL.

□ - TERMINAL BLOCK CONNECTION.
● - PRE-WIRED CONNECTION POINTS.
---------- - DEVICE INTERNAL TO MOLDED CASE DISCONNECT SWITCH.

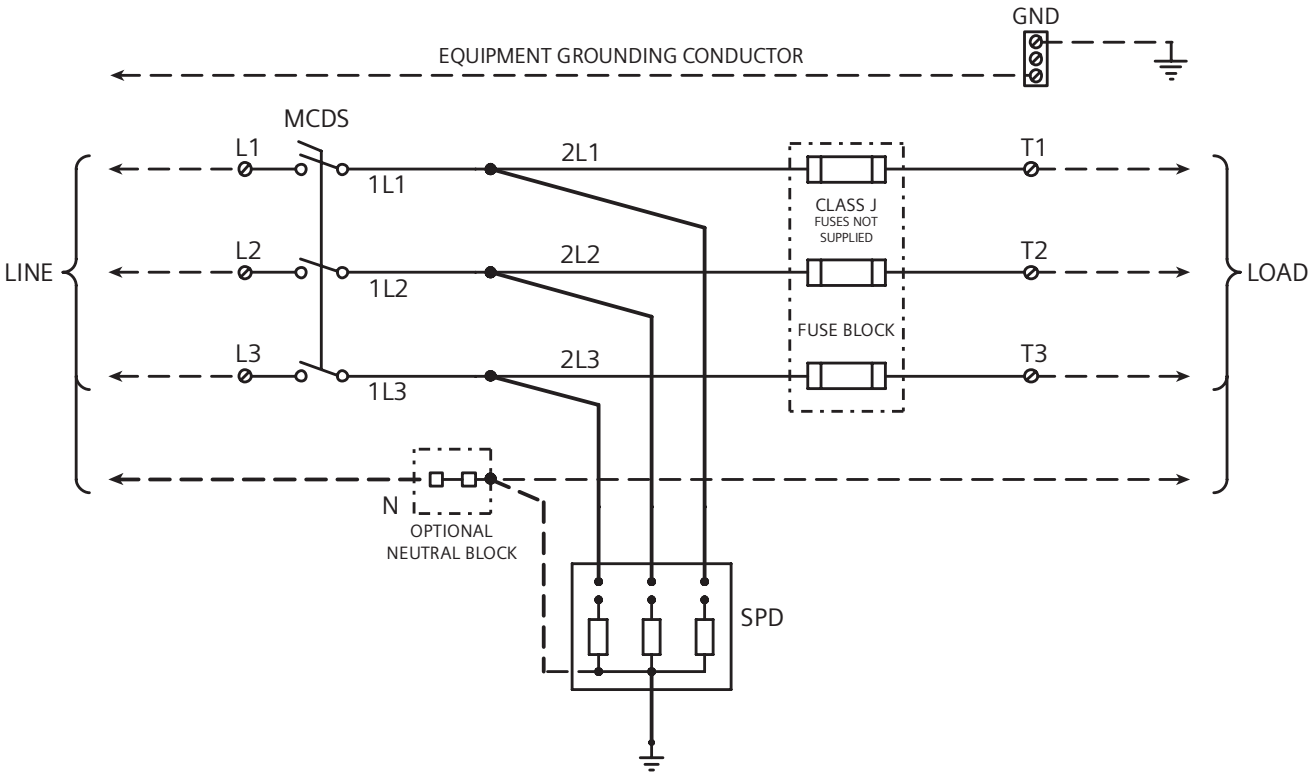

OPTIONAL SERVICE ENTRANCE PROVISIONS

FOR SERVICE ENTRANCE PURPOSES IN THE U.S. ONLY, THE CONTROLLER IS INTENDED FOR 4-WIRE, 3 PHASE SYSTEM (GROUNDED CENTER POINT OF WYE OR GROUNDED MID POINT OF ONE PHASE OF DELTA), WITHOUT PROVISIONS FOR A LOAD NEUTRAL AND THE LOAD IS CONNECTED LINE-TO-LINE.
REFER TO RATING LABEL FOR OPTIONAL NEUTRAL KIT FOR LINE TO NEUTRAL CONNECTIONS.
INSTALL SERVICE BARRIER KIT, (NOT INCLUDED) OVER LINE SIDE LUGS.
REFER TO TABLE BELOW FOR REQUIRED SERVICE LINE BARRIER KIT.

ENCLOSURE SIZE	LINE SIDE BARRIER KIT	w\ PROBE HOLES
30-100A	3VA9131-0WD30	3VA9131-0WD31
200-400A	3VA9471-0WD30	3VA9471-0WD31

SCHEMATIC LEGEND
MCDS - MOLDED CASE DISCONNECT SWITCH
SPD - SURGE PROTECTION DEVICE
□ - NEUTRAL TERMINAL BLOCK CONNECTION
● - PRE-WIRED CONNECTION POINTS.

Notes