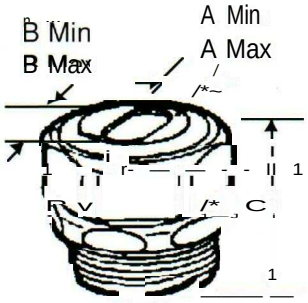

Listed
Control No. 4.W8
File No. APVX113

Water-Tight Connector

TRADE SIZE	HALEX PART#	PCS/ UNIT	CTN/CASE QTY	CTN/CASE WT	UPC BAR CODED SELL UNIT	DIMENSIONS (in inches) A MIN	A MAX	B MIN	B MAX	C
1" / 3#8	07110	tray box	10	4	UPC on product	0.310	0.560	0.410	0.650	1.48
1 " / 3#8	07110B	bulk	10/100	4/34	NA	0.310	0.560	0.410	0.650	1.48
1 " / 3#6	07210	tray box	10	4	UPC on product	0.310	0.585	0.460	0.715	1.48
1" / 3#6	0721 OB	bulk	10/100	4/34	NA	0.310	0.585	0.460	0.715	1.48
1 / 3#4	07310	tray box	10	4	UPC on product	0.355	0.680	0.530	0.850	1.48
r/3#4	0731 OB	bulk	10/100	4/34	NA	0.355	0.680	0.530	0.850	1.48
1 W / 3#3	08112B	bulk	10/100	5/52	NA	0.455	0.815	0.550	0.910	1.75
1 ¼" /3#?	08212	tray box	10	5	UPC on product	0.480	0.845	0.580	0.960	1.75
	08212B	bulk	10/100	5/52	NA	0.480	0.845	0.580	0.960	1.75
1 ¼ / 3#1	08312	tray box	10	5	UPC on product	0.525	0.955	0.660	1.120	1.75
1 V4.. / 3#1	0831 2B	bulk	10/100	5/52	NA	0.525	0.955	0.660	1.120	1.75
	noii CD	bulk	5/50	9/99	NA	0.555	1.095	0.705	1.195	1.91
1 ½"/3#2/0	09215	tray box	5	3	UPC on product	0.595	1.125	0.740	1.235	1.91
1 Vi"/3#2/0	0921 5B	bulk	5/50	3/33	NA	0.595	1.125	0.740	1.235	1.91
2"/3#1/O	10120	tray box	5	4	UPC on product	0.585	1.085	0.750	1.195	2.11
2"/3#1/0	10120B	bulk	5/50	4/44	NA	0.585	1.085	0.750	1.195	2.11
2" / 3#2/0	10220	tray box	5	4	UPC on product	0.635	1.165	0.740	1.235	2.11
2" / 3#2/0	10220B	bulk	5/50	4/44	NA	0.635	1.165	0.740	1.235	2.11
2" / 3#3/0	10320B	bulk	5/50	4/44	NA	0.685	1.285	0.830	1.415	2.11
2" / 3#4/0	10420	tray box	5	4	UPC on product	0.655	1.275	0.890	1.540	2.11
2" / 3#4/0	10420B	bulk	5/50	4/44	NA	0.655	1.275	0.890	1.540	2.11
2" / 3#4/0	10520	tray box	5	4	UPC on product	0.705	1.385	0.995	1.580	2.11
2" / 3#4/0	10520B	bulk	5/50	4/44	NA	0.705	1.385	0.995	1.580	2.11
FITS UF CABLE ONLY: #12/2										
1/2"	**06605B**	bulk	25/250	4.3/42.5	NA	0.10	0.22	0.48	0.44	1.20
BAGGED ITEMS										
1/2"	**90661**	1/bag	50 bags	8.5	UPC on bag	0.10	0.22	0.48	0.44	1.20
CARDED ITEMS										
1/2"	**40661**	2/card	10 cards	3.4	UPC on card	0.10	0.22	0.48	0.44	1.20
F/7S UF CABLE: #12/2, #12/3										
3/4"	**06607B**	bulk	25/250	6.5/65	NA	0.18	0.22	0.80	0.66	1.27
BAGGED ITEMS										
3/4"	**90662**	1/bag	35 bags	9.1	UPC on bag	0.18	0.22	0.80	0.66	1.27
CARDED ITEMS										
3/4"	**40662**	2/card	8 cards	4.2	UPC on card	0.18	0.22	0.80	0.66	1.27

Application: Indoors Or Outdoors
Use to secure SE/SEU cable to a metal enclosure. Use to connect UF cable to a waterproof box with a threaded hub.
Material: Zinc Die Cast
Purpose: For SE/SEU Flat Style cable: 2 insulating conductors, 1 bare

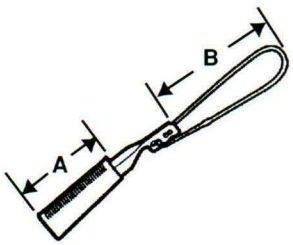

Wedge Clamp Connector

						A	B
6-2	**51061**	tray box	20	2.6	UPC on product	3.00	5.45
4-1/0	**51062**	tray box	10	2.4	UPC on product	3.75	5.45
2/0-4/0	**51063**	tray box	10	2.4	UPC on product	3.75	5.45

Application: Indoors Or Outdoors
Use to connect a triplex overhead service entrance cable to a mounting device on a building.
Material: Aluminum wedge and shell, with stainless steel bail