

JS LED®

ECO Lighting Technology and Solutions



LED Driver

Model No. MJ-12100/MJ-24100

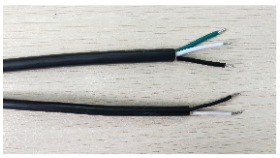

FG/ ⏚(Green)
AC/N(White)
AC/L(Black)
+V(Black)
-V(White)

cULus E308859 IP68 CE RoHS

Features

- Ip68 design for indoor or outdoor installations
- Protections: Short circuit / Overload/Over temperature
- Cooling by free air convection
- 100% full load burn-in test
- IP68 waterproof
- Meet the standard of world lighting safety
- Suitable for LED lighting
- Products through CE, RoHS,UL Certification

Please visit jsledpower.com for more information

For support please call toll free number 1-800-909-5188

Headquarter Office
1318 Maine Ave.,
Baldwin Park, CA 91706
Tel: (626) 338 - 8291
Fax: (626) 338 - 8391

Texas Branch
2307 Shaver St.,
Pasadena, TX 77502
Tel: (832) 270 - 1556

New Jersey Branch
600 Deer Rd., Suite #3
Cherry Hill, NJ 08034
Tel: (646) 287 - 5979

Florida Branch
4333 Silver Star Rd., Suite #170
Orlando, FL 32808
Tel: (407) 808 - 9768

SPECIFICATION

MODEL		MJ-12100	MJ-24100			
OUTPUT	DC VOLTAGE	12V	24V			
	RATED CURRENT	8.4A	4.2A			
	CURRENT RANGE	0~8.3A	0~4.2A			
	RATED POWER	100W	100W			
	RIPPLE & NOISE (max.) NOTE.2	200mV	250mV			
	VOLTAGE TOLERANCE NOTE.3	±2%	±1%			
	LINEAR REGULATION	±1%	±1%			
	LOAD REGULATION	±2%	±2%			
INPUT	VOLTAGE RANGE	100-277VAC				
	FREQUENCY RANGE	50 ~ 60Hz				
	POWER FACTOR (Typ.)	PF>0.6/110VAC				
	EFFICIENCY (Typ.)	88%	88%			
	AC CURRENT (Typ.)	1.4A/110VAC				
	INRUSH CURRENT (Typ.)	COLD START 100A/110VAC				
PROTECTION	Short circuit	Protection type : recovers automatically after fault condition is removed				
	Overload	overload protected @ 115-140% above peak rating				
	Over temperature	Protection type : Shut down o/p voltage, re-power on to recover				
ENVIRONMENT	WORKING TEMP.	-30 ~ +50℃ (Refer to output load derating curve)				
	WORKING HUMIDITY	20 ~ 99% RH non-condensing(Waterproof)				
	STORAGE TEMP., HUMIDITY	-40 ~ +80℃ , 10 ~ 99% RH				
SAFETY & EMC	SAFETY STANDARDS	UL				
	WITHSTAND VOLTAGE	I/P-O/P:1.5KVAC I/P-GND:1.5KVAC				
	EMC Test Standards	EN55015:2013;EN61547:2009; EN61000-3-2:2014; EN61000-3-3:2013				
NOTE	1. All parameters NOT specially mentioned are measured at 110VAC input, rated load and 25℃ of ambient temperature. 2. Ripple & noise are measured at 20MHz of bandwidth by using a 12" twisted pair-wire terminated with a 0.1uf & 10uf parallel capacitor. 3. Tolerance : includes set up tolerance, line regulation and load regulation.					

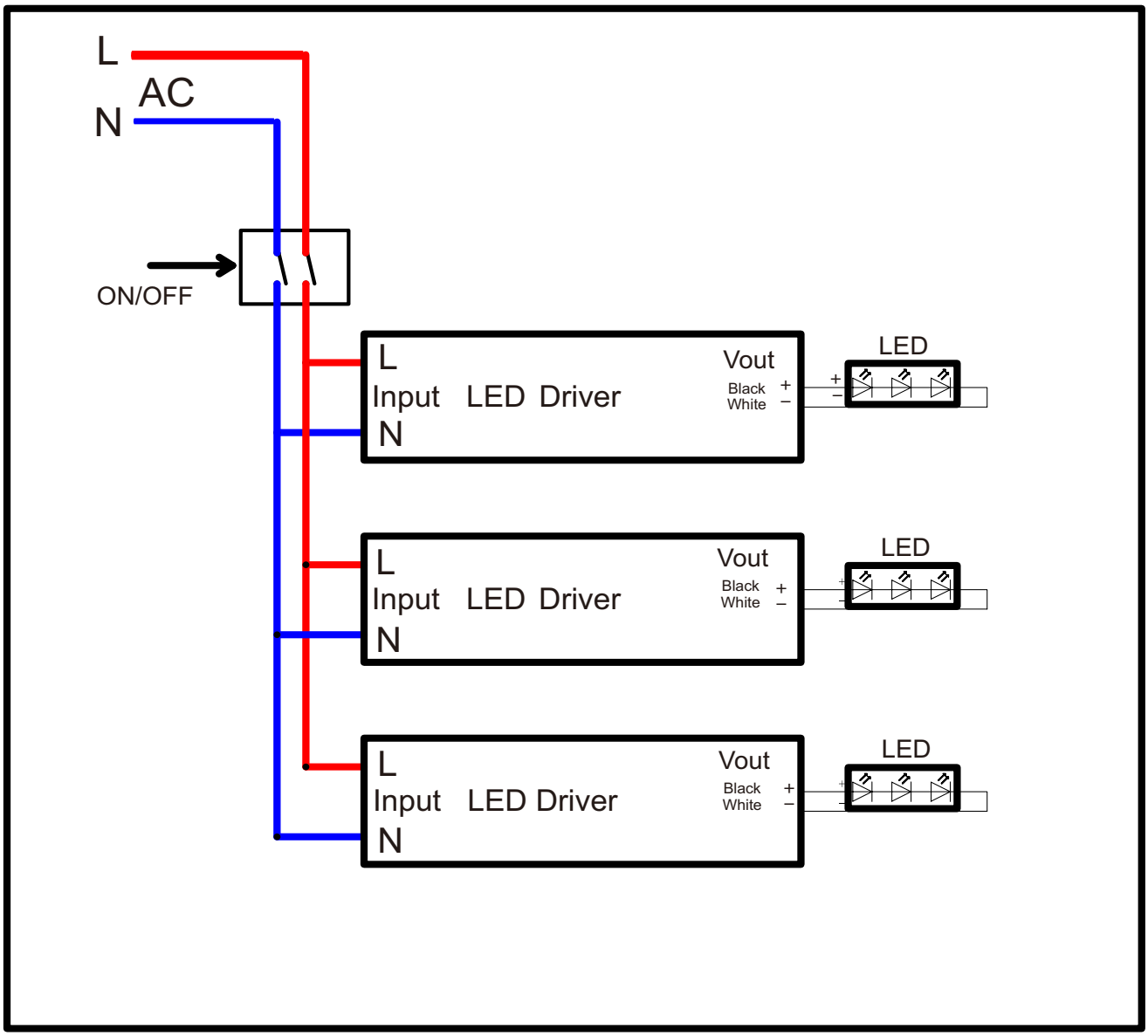
L
AC
N
ON/OFF
L
Input LED Driver
N
Vout
Black +
White –
LED
L
Input LED Driver
N
Vout
Black +
White –
LED
L
Input LED Driver
N
Vout
Black +
White –
LED

Mechanical Specification

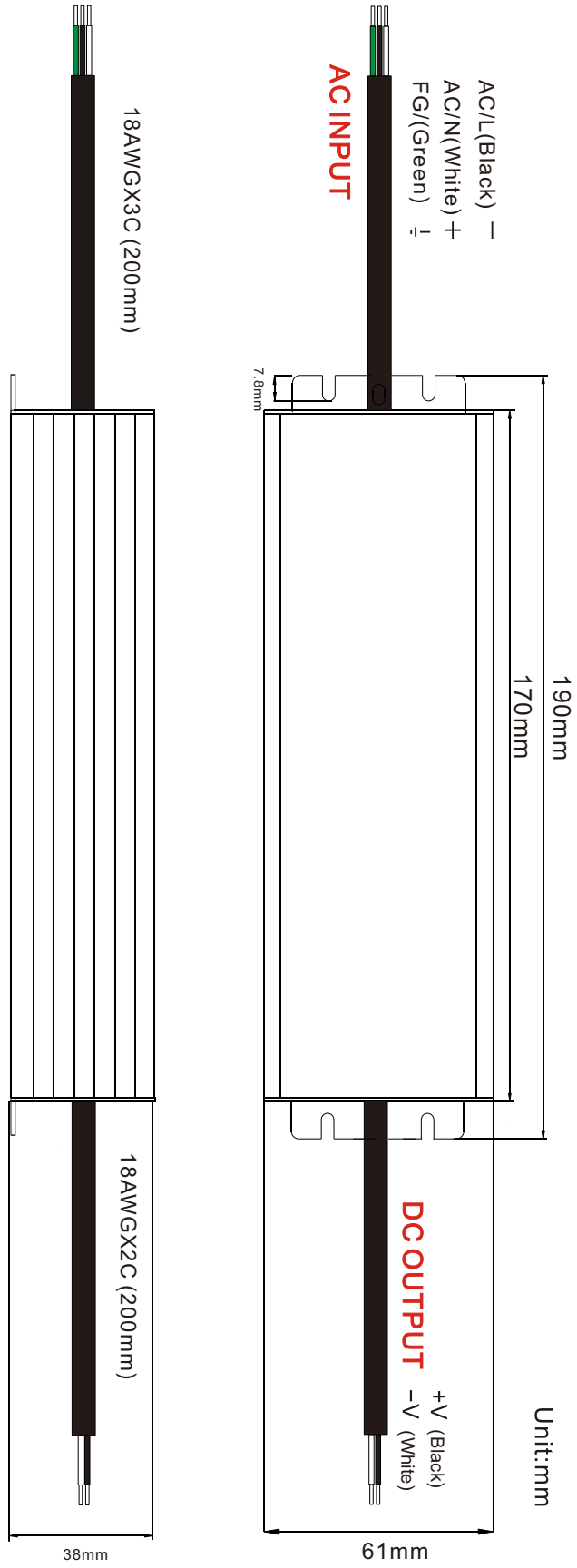

Others

DIMENSION	190X61X38(mm) (L×W×H)
CARTON QUANTITY	15PCS/Carton
CARTON SIZE	398*268*158mm
WEIGHT	11Kg/G.W

Deratiing Curve

