

Your problem: The little things that make your job easier add up. Maybe it's having the right fuse puller, so your people don't put themselves at risk by "improvising" during fuse changeouts. Or maybe you're an OEM designer or specifying engineer, and that circuit protection problem you've been wrestling with would disappear if fuses came with a special gadget that . . .

Our solution: Look no further than Mersen's line of Circuit Protection Accessories. Cabinets, box covers, reducers, pullers, blown-fuse indicators, add-on switches . . . they're all here. In stock. Under one roof. And ready to meet your circuit protection system maintenance needs — or help you solve specialized design problems.

Want more information fast? For more technical or application-specific information, please call our Circuit Protection Accessories experts, at 978-248-8914 or visit our website at **mersen.com.**

Circuit Protection Accessories

YOU MAINTAIN THE CIRCUIT. WE'LL MAINTAIN AN INVENTORY OF ACCESSORIES TO HELP.

- Fuse Reducers . . . . . AC 2
- Fuse Pullers, Clip Clamps . . . AC 3
- Trigger® Indicator . . . . . AC 4
- Shawmut Trigger® . . . . . AC 4
- Trigger® Actuator . . . . . AC 4
- Blown Fuse Indicators . . . . . AC 5
- Add-on Switches . . . . . AC 5
- IL Indicator . . . . . AC 5
- PSC Microswitches . . . . . AC 6
- Protistor® Microswitches. . . . AC 9
- Point of Sale Displays . . . . . AC 11

MERSEN

Expertise, our source of energy

Fuse Reducers

CIRCUIT PROTECTION ACCESSORIES

Mersen Fuse Reducers allow the use of lower rated fuses in existing equipment having clips with higher ampere ratings. The use of closer rated time-delay fuses can improve circuit protection. For example, renewable or one-time fuses feeding a motor can be replaced with fuses sized closer to the motor nameplate current. Non-rejection Reducers will allow Class H, K or R fuses to fit Class H or K clips. Rejection-type Reducers will allow only Class R fuses to fit Class R clips or only Class J fuses to fit Class J clips. Class J Fuse Reducers are not for bolt on applications.

CATALOG NUMBERS

Class H & K (Non-rejection)	Class R (Rejection)	Class J (Rejection)	Description
250V			
632	R632	-	Allows 30A fuse to fit 60A clips
132	R132	-	Allows 30A fuse to fit 100A clips
162	R162	-	Allows 60A fuse to fit 100A clips
262	R262	-	Allows 60A fuse to fit 200A clips
212	R212	-	Allows 100A fuse to fit 200A clips
412	R412	-	Allows 100A fuse to fit 400A clip
422	R422	-	Allows 200A fuse to fit 400A clips
612	R612	-	Allows 100A fuse to fit 600A clips
622	R622	-	Allows 200A fuse to fit 600A clips
642*	R642*	-	Allows 400A fuse to fit 600A clips
600V			
636	R636	J636	Allows 30A fuse to fit 60A clips
162	R162	J136	Allows 30A fuse to fit 100A clips
166	R166	J166	Allows 60A fuse to fit 100A clips
-	-	J236	Allows 30A fuse to fit 200A clips
266	R266	J266	Allows 60A fuse to fit 200A clips
212	R212	J216	Allows 100A fuse to fit 200A clips
412	R412	J416	Allows 100A fuse to fit 400A clips
422	R422	J426	Allows 200A fuse to fit 400A clips
612	R612	J616	Allows 100A fuse to fit 600A clips
622	R622	J626	Allows 200A fuse to fit 600A clips
642*	R642*	J646*	Allows 400A fuse to fit 600A clips

**Not a pair; rejection end piece only.*

SAFETY NOTE:

Fuse Reducers are intended for temporary use only.

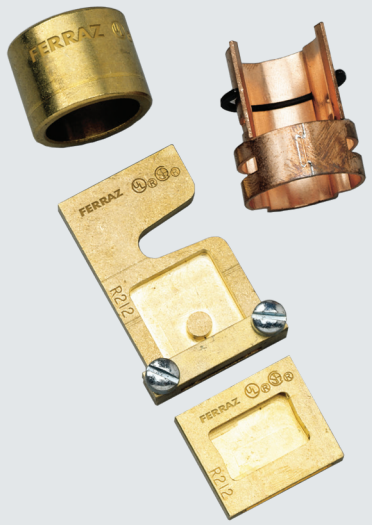

RATINGS:

- **Volts:** for 250 and 600V Class H, K and R fuses; for 600 Volt Class J fuses
- **Amps:** 30 to 600A
- Tested to 200,000A

APPROVALS:

- UL Listed Guide No. IZZR
- CSA Certified

© 2024 Mersen. All rights reserved. Mersen reserves the right to change, update, or correct, without notice, any information contained in this datasheet.

Fuse Pullers/Clip Clamps

CIRCUIT PROTECTION ACCESSORIES

PLASTIC FUSE PULLERS

Mersen plastic fuse pullers are fully insulated, made of high-dielectric, reinforced plastic with notched handles to provide a safe grip. Stronger and more durable than fiber pullers, they are permanently marked with the recommended fuse ampere range. Yellow color for safety.

Catalog No.	Description		Use with Fuses		
	Size	Length (in)	Ampere	Volts	Diameter (in)
34-001G	small	5	0-30	32-250	9/32-1/2
34-002G	pocket	7-1/2	0-100	250 600	-
34-003G	large	11-3/4	31-600 31-400	250 600	-

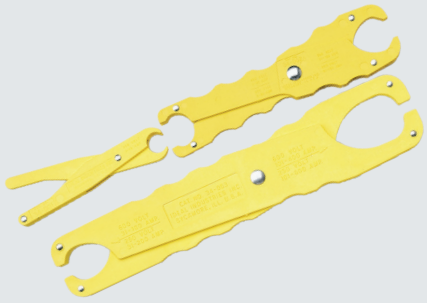

PLASTIC FUSE CLAMPS

Mersen fuse clip clamps are used to clamp fuse clips together onto a fuse ferrule or blade. An easy twist of the cap tightens the jaws against the clip, preventing heating by reducing resistance at the point where fuse and clip make contact. This helps prevent loss of spring tension due to annealing from overheating.

Catalog No.	Use with Fuse Clips			Weight (ounces)
	Type	Ampere	Volts	
32-001G	Ferrule	30	250	2
32-002G	Ferrule	60	250	
32-002G	Ferrule	30	600	
32-003G	Ferrule	60	600	
32-004G	knife blade	100	250 or 600	2
32-005G		200		2
32-006G*		400		8
32-007G		600		8

** Wide jaws permit clamping split clips.*



NYLON FUSE PULLERS

Mersen nylon fuse pullers are fully insulated, made of high-dielectric, high impact nylon with no-slip handles and protective finger stops for greater safety when inserting fuses. Yellow color for safety.

Catalog No.	Description		Use with Fuses	
	Size	Length (in)	Ampere	Volts
34-015G	small	5	0-30	250
34-016G	medium	7-1/4	0-100 0-60	250 600

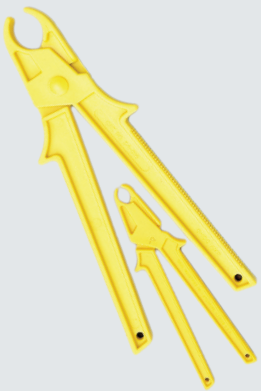

© 2024 Mersen. All rights reserved. Mersen reserves the right to change, update, or correct, without notice, any information contained in this datasheet.

Blown Fuse Indicators

CIRCUIT PROTECTION ACCESSORIES

TRIGGER® INDICATOR

The Trigger Indicator (catalog number suffix TI) is available on many blade type fuses, primarily Form 101 semiconductor fuses and some Class L fuses. The TI allows blown fuses to be identified visually, eliminating the need for resistance or continuity testing.

SHAWMUT TRIGGER®

The Shawmut Trigger Indicator is a field-mountable blown-fuse indicator which is wired in parallel with the fuse to be monitored. The striker pin exerts a static force of one pound and may be used to actuate a switch. It is available in 130 volt (TI-130), 600 volt (TI-600), and 1500 volt (TI-1500) ratings. The TI-600 Trigger is a UL Listed accessory. The Shawmut Trigger is not a fuse and should only be used in parallel with fuses rated 70A or higher. To mount the Trigger, use two midget fuse clips (for 13/32" diameter fuses) found in the Fuse Clip section.

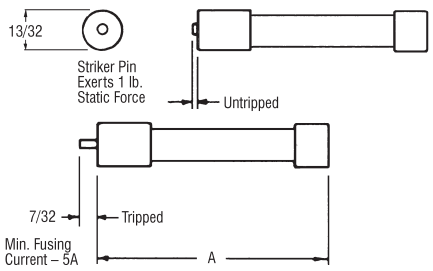

CATALOG NUMBERS

Cat No.	Volts	Length A-In.
TI-130	0-130	2
TI-600	0-600	2
TI-1500	0-1500	3-1/2

TRIGGER® ACTUATOR

The Trigger Actuator (catalog number suffix TA) has two functions and is an option available on many Amp-Trap® fuses. First, it provides visual indication of an open fuse and second, it provides a mount for an Add-On-Switch (AOS-) which can indicate a blown fuse via a signal light or initiate appropriate control action. The Trigger Actuator has no measurable I^2t or arc voltage effect on fuses rated 65A or higher. It will add 2 to 5 amperes of long term rating and requires a minimum circuit voltage of 5 to 10 volts to activate.







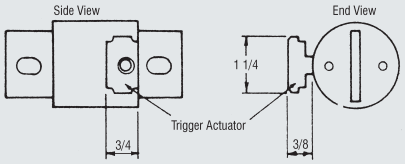

© 2024 Mersen. All rights reserved. Mersen reserves the right to change, update, or correct, without notice, any information contained in this datasheet.

Blown Fuse Indicators

ADD-ON SWITCH

Add-On-Switches contain one single-pole double-throw contact rated 4 amperes resistive and 1 ampere inductive at 250V AC maximum. Two versions of the Add-On-Switch are available. Catalog number AOS-S has screw terminals. Catalog number AOS-Q accommodates push-on connectors.



IL INDICATOR

The “IL” indicator, developed from proven designs, provides a blown fuse indication system which does not sacrifice the excellent I^2t characteristics of Mersen fuses. Its low voltage design requires just 0.9 volts to activate the indicator, thus insuring reliable fuse performance under all conditions. The red pop up button is located in the center of the fuse body for ease of visibility and optimum voltage isolation. Interference with busbar and cable connection is significantly less than other designs. The addition of the “IL” indicator provides blown fuse indication on virtually all Mersen fuses. Optional auxiliary microswitches for remote signaling are also available for use with the “IL” indicator.



FEATURES/BENEFITS:

- Visual indication or remote signaling
- Optional auxiliary microswitches
- Same size for all fuses
- Retains optimum performance
- Operation at all times above 0.9 volts

HIGHLIGHTS:

- Low voltage design
- Center location
- Rugged construction
- Proven reliability
- AC or DC

For blown fuse indication on general purpose fuses, please consult factory.

APPROVALS:

- UL Recognized

© 2024 Mersen. All rights reserved. Mersen reserves the right to change, update, or correct, without notice, any information contained in this datasheet.

Square Body Fuse Microswitches and Studs

CIRCUIT PROTECTION ACCESSORIES

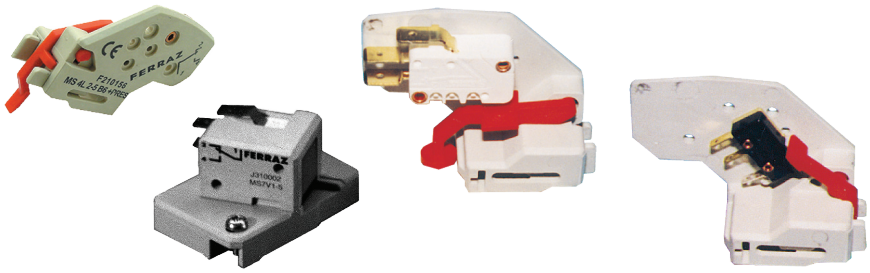

FEATURES/BENEFITS:

- Microswitch systems adapted to the following fuses:
  - PSC sizes 30, 31, 32, 33 / 70, 71, 72, 73
  - Blade-type PSC (PA) sizes 0-1, 2-3 / 70, 71, 72, 73
  - PSC sizes 000 / 00

APPLICATIONS DATA

Description	AC Volt ***	Positive Operating Volt/ Current	Rated Current	Nature of Current	Interrupting Rating						AC Voltage Withstand Test	Impulse Voltage Test UIMP 1.2/50	FIRE Class UL 94
					Non-Inductive Circuit			Inductive Circuit					
					30V	110V	250V	30V	110V	250V			
MS 3V 1-5	1000 V	20 V 50 mA	10 A	50/60 Hz	10A	10A	10A	10A	10A	10A	8.5 kV*	14 kV**	H.B.
MS 7V 1-5	1500 V			DC	8A	0.4A	.2A	4A	.2A	.1A	12 kV*	20 kV**	
MS 3V 1-5 BS	1000 V	10 V 10 mA	3 A	50/60 Hz DC	3A	3A	3A	2A	1A	1A	8.5 kV*	14 kV **	
MS 7V 1-9 BS					3A	0.5A	0.25A	3A	0.2A	0.1A			
MS 7V 1-5 BS	1500 V										12 kV*	20 kV**	
MS 7V 1-9 BS													
MS 3V 1-5 ET	1000V			50/60 Hz	3A	3A	3A	2A	1A	1A	8.5 kV*	14 kV**	
MS 7V 1-5 ET	1500V			DC	3A	0.5A	-	2A	0.2A	-	12 kV*	20 kV**	
MS PA 2-5	1500 V	20 V 50 mA	10 A	50/60 Hz	10A	10A	10A	10A	10A	10A	9 kV*	13 kV**	V0
				DC	8A	0.4A	0.2A	4A	0.2A	0.1A			
MS PA 2-5 B2	1500 V	20 V 100 mA	5 A	50 Hz	4A	4A	5A	-	5A	5A	12 kV*	16 kV**	
MS 4L 2-5 B2	1000 V			DC	-	-	-	-	2A	0,4A	8 kV*	13 kV**	
MS 4L 2-5 B6		20 V 50 mA	10 A	50/60 Hz	10A	10A	10A	10A	10A	10A	8 kV*	10 kV**	H.B.
				DC	8A	0.4A	0.2A	4A	0.2A	0.1A			
MC 6,3 GR 2-5N		20 V 100 mA	5 A	50/60 Hz	-	5A	3A	-	3A	2A	3.5 kV*	-	
				DC	4A	0.4A	-	3A	0.4A	-			
MC 36 GR 2-5				50/60 Hz	-	5A	5A	-	5A	5A	7.5 kV*	-	
				DC	4A	0.4A	-	2A	0.4A	-			

* *Between power circuit and microswitch terminals as per IEC 60 and 694 and NFC 64010 (50/60 Hz 1 min. duration in dry air)*

** *Between power circuit and microswitch terminals Uimp: impulse voltage as per IEC 947-1*

*** *Between power circuit and microswitch terminals*

EACH MICROSWITCH WEIGHS LESS THAN 100 g, THEREFORE NO FUME AND SMOKE GRADE IS REQUIRED BY NF F 16-102 STANDARD

© 2024 Mersen. All rights reserved. Mersen reserves the right to change, update, or correct, without notice, any information contained in this datasheet.

MS 3V FUSE SIZES: 30 - 33

Fuse Size	Description	Ref. No.	Indication Style	Weight (g)
30, 31 32, 33	MS 3V 1-5 (fig.1)	X310014	Standard NO-NC	34
	MS 3V 1-5 BS (3)	W310013	Low Level NO-NC	34
	MS 3V 1-9 BS (4)	T310011	Low Level NO-NC	44
	MS 3V 1-5 ET (fig.3)	R310009	Low Level NO-NC	34

(3) Same as fig. 1
(4) Same dimensions as fig. 1 but with 2 microswitches side by side
(9) Watertightness class

MS 7V1 FUSE SIZES: 70 - 73

Fuse Size	Description	Ref. No.	Indication Style	Weight (g)
70, 71 72, 73	MS 7V 1-5 (fig.4)	J310002	Standard NO-NC	45
	MS 7V 1-5 BS (7)	K310003	Low level NO-NC	45
	MS 7V 1-9 BS (8)	P310007	Double pole NO-NC Low level	55
	MS 7V 1-5 ET (fig.5)	S310010	Low level NO-NC	55

(7) Same as fig. 4
(8) Same dimensions as fig. 4 but with 2 microswitches side by side
(9) Watertightness class
Attention: Microswitch systems exclusively designed for Mersen PSC fuses are fitted with a patented trip-indicator, saving the use of an EDV.

STANDARD THREADED STUDS

Size	Reference No. Per Pair	Ref. and Dimension Per Pair of Studs	Weight (g)	Max Stud Mounting Torque (Nm)*	Max Nut Tightening Torque (Nm)*		
					Fig. 1	Fig. 2	Fig. 3
70 & 71	S098801	HC M8 X 30 & M 8 X 35	23	13	13.5	13.5	13.5
72	T098802	HC M 10 X 30 & M 10 X 50	40	15	26	26	26
73	V098803	HC M 12 X 35 & M 12 X 50	60		46	46	15
2X72	W098804	HC M 10 X 50	50		26	26	26
2X73	X098805	HC M 12 X 50	70		46	46	15

Packaging: 6 pairs

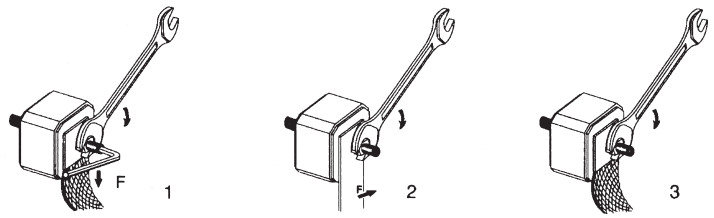

Fig. 1

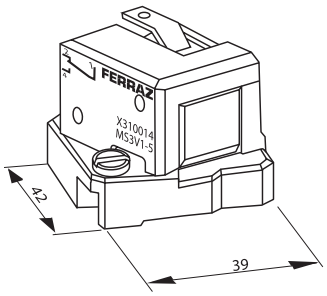

Fig. 2

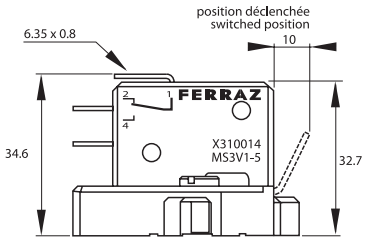

Fig. 3

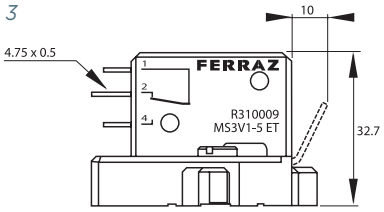

Fig. 4

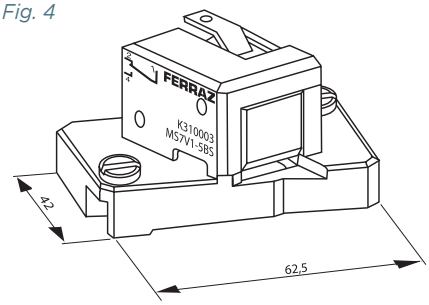

Fig. 5

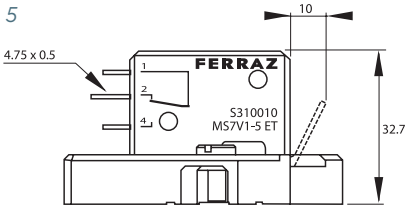

© 2024 Mersen. All rights reserved. Mersen reserves the right to change, update, or correct, without notice, any information contained in this datasheet.

MS INDICATION SYSTEM FOR 000 & 00 FUSES AS PER DIN 43653 AND DIN 43620 TERMINALS

Automatically resettable, these microswitch systems indicate fuse presence (PRES) and proper mounting. In case of improper mounting or fuse melting, terminals 1-4 closed.

Catalog Number	Reference No.	Weight (g)
MS 4L 2-5 B6 + PRES (fig. 1) (1)	F210156	30
MS 4L 2-5 B2 + PRES (fig. 2) (2)	G210157	26

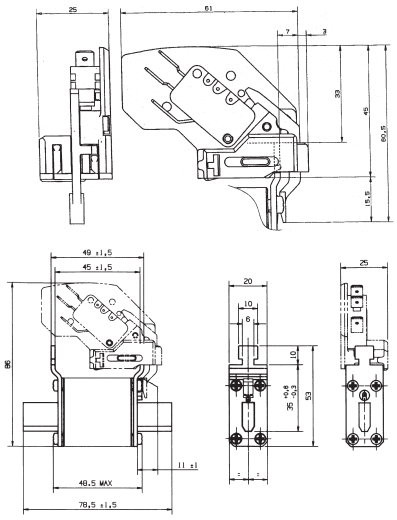

(1) 6.3mm Clips

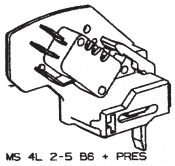

Fig. 1

(2) 2.8mm Clips

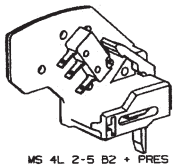

Fig. 2

MC INDICATION SYSTEM FOR BS 88-4 BLOWN FUSE TRIP-INDICATOR

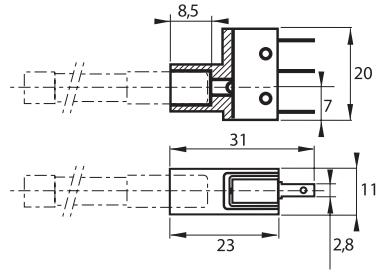

Catalog Number	Reference No.	Weight (g)
MC 6,3 GR 2-5 N with external trip-indicator	Y310015	10

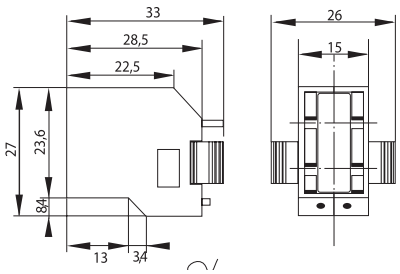

Catalog Number	Reference No.	Weight (g)
MC 36 GR 2-5 for British standard fuses with internal indicator 27 and 36	P092496	10

© 2024 Mersen. All rights reserved. Mersen reserves the right to change, update, or correct, without notice, any information contained in this datasheet.

Protistor® Fuse Microswitches

CIRCUIT PROTECTION ACCESSORIES

MICROSWITCH SYSTEMS FOR ROUND AND SQUARE-BODY FUSES (NOT FOR PSC FUSES)

The Protistor fuse microswitch is a remote signaling system designed to fit on round and square body Protistor fuses (not for PSC fuses) that are equipped with microswitch support. It indicates fuse status and has a manual reset feature.

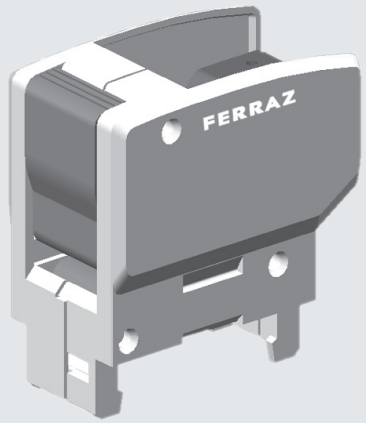

FEATURES/BENEFITS:

- Remote signaling systems for fitting on Mersen fuses equipped with microswitch support
- Indication of fuse status
- Manual reset
- Standard and low current models with different insulation ratings
- Watertight types for use in corrosive atmospheres

CHARACTERISTICS

Type	Catalog Number	AC or DC Insulation Voltage Rating Ui (V)	AC Voltage Withstand Test (.)	Impulse Voltage Test Uimp 1,2/50 hs (..)	Positive Operating Min. Voltage / Min. Current	Current Rating	Current	Non-inductive Circuit			Inductive Circuit L/R=25ms		
								30V	110V	250V	30V	100V	250V
Standard	MC3E 1-5N	1250V	15 kV	20 kV	20 V 50 mA	5A	50/60 Hz DC	10 A	10 A	7 A			6 A
	MCR3E 1-5N	2200V	20 kV	30 kV				5 A	0.5 A		1.6 A	0.3A	
Low Level	MC3E 1-5NBS	1250V	15 kV		10 V 10 mA	3A	50/60 Hz DC						
	MC3E 1-9NBS	1250V	15 kV	20 kV				3 A	3 A	3 A	2 A	1 A	1 A
	MCR3E 1-5NBS	2200V	20 kV (1)										
	MCR3E 1-9NBS	2200V	23 kV (2)	30 kV									
	MC2R3E 1-5BS	6000V	24 kV (1)					3 A	0.5 A	0.25 A	3 A	0.2 A	0.1 A
	MC2R3E 1-9NBS	6000V	26 kV (2)	40 kV									
Watertight IP 50	MC3E 1-5NET	1250V	32 kV (3)	16 kV	10 V 10 mA	3A	50 Hz DC		3 A	3 A		1 A	1 A
	MCR3E 1-5NET	2200V	11 kV	30 kV					0.5A			0.2 A	
	MC2R3E 1-5NET	6000V	20 kV (1)	40 kV									

Catalog numbering system: MC3E 1-5 single pole microswitch - MC3E 1-9 double pole microswitch - MCR, MC2R reinforced insulation microswitch

* *Between power circuit and microswitch terminals as per IEC 60 and 694 and NFC 64010 (50/60 Hz 1 min. duration in dry air)*

** *Between power circuit and microswitch terminals Uimp: impulse voltage according to IEC 947-1*

*** *Between power circuit and microswitch terminals*

EACH MICROSWITCH WEIGHS LESS THAN 100g, THEREFORE NO FUME AND SMOKE GRADE IS REQUIRED BY NF F16-102 STANDARD

(1) for short body fuses (sizes 30 - 31 - 32 - 33 - 70 - 71 - 72 - 73 - 83 - 84) Except PSC

(2) for sizes 100 - 91 - 92 - 93 - 94 - 123 - 124 fuses and longer

(3) for sizes 171 - 172 - 173 - 174 fuses and longer

© 2024 Mersen. All rights reserved. Mersen reserves the right to change, update, or correct, without notice, any information contained in this datasheet.

REMOTE SIGNALING WITH 1250VAC/DC INSULATION VOLTAGE

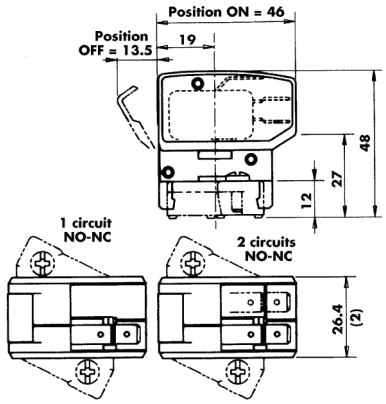

Quantity of NO-NC separated circuits	Contact	Catalog Number	Ref. Number	Weight (g)	Pack. (1)
1	standard	MC3E 1-5N	D310020	39.5	3
1	low level	MC3E 1-5NBS	E310021	39.5	3
2	low level	MC3E 1-9NBS	F310022	45.7	3
1	watertight	MC3E 1-5NET	L310027	40.2	3

REMOTE SIGNALING WITH INSULATION VOLTAGE UP TO 2200VAC/DC

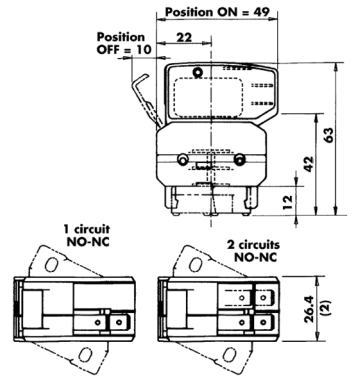

Quantity of NO-NC separated circuits	Contact	Catalog Number	Ref. Number	Weight (g)	Pack. (1)
1	standard	MCR3E 1-5N	G310023	51.7	1
1	low level	MC3RE 1-5NBS	P310030	51.7	1
2	low level	MCR3E 1-9NBS	H310024	58.0	1
1	watertight	MCR3E 1-5NET	Q310031	52.5	1

REMOTE SIGNALING WITH INSULATION VOLTAGE UP TO 6000VAC/DC

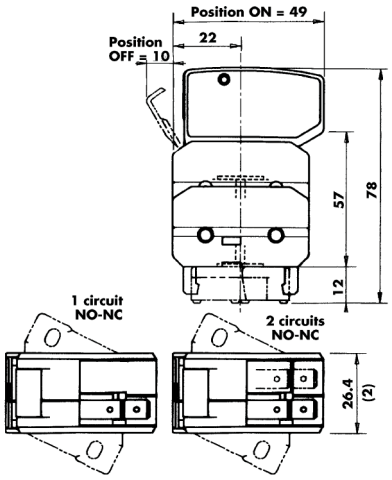

Quantity of NO-NC separated circuits	Contact	Catalog Number	Ref. Number	Weight (g)	Pack. (1)
1	low level	MC2R3E 1-5NBS	J310025	64.0	1
1	watertight	MC2R3E 1-5NET	N310029	64.8	1
2	low level	MC2R3E 1-9NBS	K310026	70.3	1

ELECTRICAL DIAGRAM OF EACH MICROSWITCH CIRCUIT

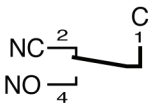

Non-blown fuse Microswitch ON

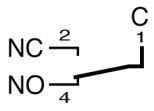

Blown fuse Microswitch OFF

All of these signaling systems are resettable and fitted with silver-plated 3-terminal microswitch C, NO and NC. The C terminal is on the top and connection is made via 6.35 mm clips except for watertight models whose clips are 4.8 mm wide

NOTE (2): The 26.4 dimension is the same with 1 or 2 separated circuits NO-NC.
Tests with sine vibrations carried out at ambient with scanning of the three main holder axes.
Spectrum: 1st segment (2 to 16 Hz) constant trip x = 5 mm peak.
2nd segment (16 to 250 Hz) constant acceleration y + 5 g peak
Exponential scanning speed: 1 octave per minute.
Duration: 2 hours per axis.

© 2024 Mersen. All rights reserved. Mersen reserves the right to change, update, or correct, without notice, any information contained in this datasheet.

Point of Sale Displays

CIRCUIT PROTECTION ACCESSORIES

ROLLING BIN RACK

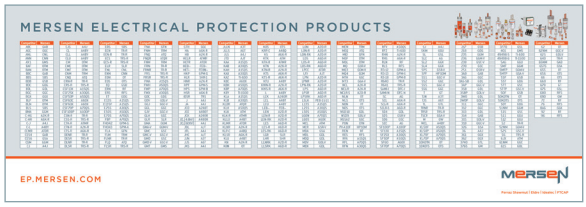

Rolling steel rack with matte black powder coated finish. Includes Mersen cross reference header. Dimensions: 35.5″W x 19.75″D x 48.5″H
64 Orange Bins: 3. 75″W X 5. 75″D X 2. 75″H
30 Gray Bins: 5. 25″W X 8. 5″D X 5″H

MRDS: MERSEN ROTATING DISPLAY STAND

This freestanding display fits easily on a counter and holds 8 boxes of Mersen's STXH Surge Protective Devices.

MFD-GLASS: MINIATURE FUSE DISPLAY

Mersen's miniature fuse display, MFD-GLASS, is a compact and organized solution to hold only the most popular glass fuses available. The display can hold up to 300 fuses (not included) and contains individual slots for supporting standard glass fuse packages. It is made from Mersen orange plastic and is wall mountable. Included with the MFD-GLASS is a paper insert with company logo. Customize this display with the specific glass fuses that meet your customers' needs. The dimensions are 8.5 (w) x 10 (h) x 1.56 (d) inches.

GSFC/GSFC-M: SPARE FUSE CABINETS

Mersen Spare Fuse Cabinets provide dedicated storage space for spare fuses. They are manufactured using prime cold rolled steel, with holes in the top and bottom to allow secure stacking. Full piano hinges prevent the door from sagging. Includes 2 adjustable shelves and keyhole slots for wall mounting. Lock attachment is built in. Two sizes: the GSFC is 20 (w) x 32 3/4 (h) x 14 1/4 (d) inches (5.4 cubic ft; the GSFC-M is 13 3/4 (w) x 30 (h) x 12 3/4 (d) inches (3.28 cubic ft).



Rolling Bin Rack



MRDS



MFD - GLASS



GSFC

GSFC-M

© 2024 Mersen. All rights reserved. Mersen reserves the right to change, update, or correct, without notice, any information contained in this datasheet.