(908) 688-8850
2199 Stanley Terrace
Union, NJ 07083

1-Gang Weatherproof Box with Five 3/4 inch outlets – 1 in each end, 1 in each side, 1 in back

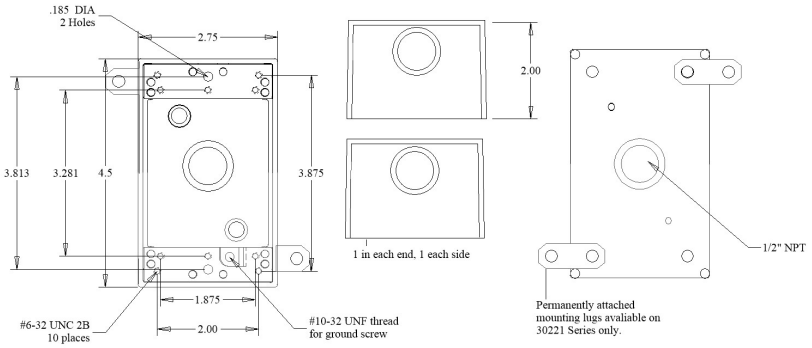

FINISH	CAT. NO. / UPC
Gray without mounting lugs	**30222** UPC 095327302227
Gray with attached mounting lugs	**30224** UPC 095327302241

TECHNICAL INFORMATION

Category: Weatherproof boxes

Application: For use in branch circuit wiring in wet, damp or dry locations. May be used as a weatherproof junction box or as a housing for various devices.

Material: Die-cast aluminum, .094 inches thick

Gang: 1
Dimensions: 2.75 inches wide x 4.5 inches high x 2 inches deep
Number of Outlets: (5) five threaded outlets
Hub Size: 3/4 inch
Outlet Locations: 1 in each end, 1 each side, 1 in back
Cubic Capacity: 18 inches

Finishes: State-of-the-art powder coat paint finish.

Available in gray.

Applicable Standards: UL Standard 514A, NEMA 3R Rated
Certification: UL Listed

Product Features:

- Permanently attached lugs rotate for maximum versatility (30224 only)
- Heavy-duty mounting straps exceed all applicable UL pull-tests.
- Easy access ground screw hole located along the surface of the mounting strap
- Superior powder coat paint finish assures maximum weatherability and scratch resistance
- Ground screw and closure plugs included
- Manufactured in the USA



Packaging: Individually packaged (shrink wrapped and bar coded)
Box Quantity: 25 pcs.