CONNECTORS
Mechanical Connectors
Aluminum, Dual Rated, Panelboard Lugs
L Series



c UL us LISTED

FEATURES
- Panelboard style for multi-conductor with NEMA mounting hole spacing for turn-prevent and secureness.
- Made of 6061T-6 aluminum alloy.
- Electro-tin plated for low contact resistance.
- For use with copper or aluminum conductors.
- All hole spacing is NEMA standard of 1.750".

SPECIFICATIONS
- cULus Listed Wire Connector.
- UL486A/B Listed. AL9CU
- **Temperature Rating:** 90 °C.
- **Voltage:** 600V max. (2000V ma. per UL486B).

FIG. 1	FIG. 2	FIG. 3
		

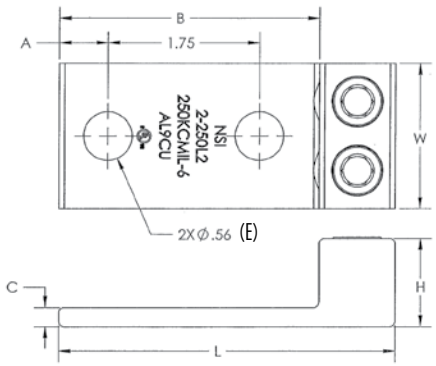

CAT. NO.	FIG. NO.	WIRE RANGE	MTG. BOLT SIZE (IN.)	MAX TORQUE VALUE (IN./LBS.)	HEX WRENCH SIZE (IN.)		MTG. HOLE DIA. (E) (IN.)	LENGTH (L) (IN.)	WIDTH (W) (IN.)	HEIGHT (H) (IN.)	TANG LENGTH (A) (IN.)	TANG LENGTH (B) (IN.)	TANG THICKNESS (C) (IN.)	STD. CTN. QTY.
250L2	1	250 MCM-6 AWG	1/2	330	5/16	⬢	0.560	4.310	0.880	1.380	0.560	3.090	0.310	15
2-250L2	2	(2) 250 MCM-6 AWG	1/2	330	5/16	⬢	0.560	3.880	1.690	1.020	0.560	3.010	0.220	6
3-250L2/L4	3	(3) 250 MCM-6 AWG	1/2	330	5/16	⬢	0.560	3.880	2.500	1.020	0.560	3.010	0.220	3
350L2	1	350 MCM-6 AWG	1/2	400	5/16	⬢	0.560	4.310	0.990	1.380	0.630	3.090	0.310	8
2-350L2	2	(2) 350 MCM-6 AWG	1/2	400	5/16	⬢	0.560	4.250	1.920	1.130	0.630	3.250	0.250	4
3-350L2/L4	3	(3) 350 MCM-6 AWG	1/2	400	5/16	⬢	0.560	4.250	2.920	1.130	0.630	3.250	0.250	2
600L2	1	600 MCM-2 AWG	1/2	550	3/8	⬢	0.560	4.650	1.380	1.510	0.630	3.400	0.380	4
2-600L2	2	(2) 600 MCM-2 AWG	1/2	550	3/8	⬢	0.560	4.650	2.406	1.510	0.630	3.400	0.380	3
3-600L2/L4	3	(3) 600 MCM-2 AWG	1/2	550	3/8	⬢	0.560	4.650	3.930	1.510	0.630	3.400	0.380	2
800L2	1	800-350 MCM	1/2	550	1/2	⬢	0.560	4.750	1.440	1.690	0.630	3.380	0.440	4
2-800L2	2	(2) 800-350 MCM	1/2	550	1/2	⬢	0.560	4.750	2.750	1.690	0.630	3.380	0.440	2
3-800L2/L4	3	(3) 800-350 MCM	1/2	550	1/2	⬢	0.560	4.750	4.060	1.690	0.630	3.380	0.440	2
1000L2	1	1000-500 MCM	1/2	600	9/16	⬢	0.560	4.940	1.690	1.880	0.630	3.440	0.440	4
2-1000L2	2	(2) 1000-500 MCM	1/2	600	1/2	⬢	0.560	4.940	3.190	1.880	0.630	3.440	0.440	2
3-1000L2/L4	3	(3) 1000-500 MCM	1/2	600	9/16	⬢	0.560	4.940	4.690	1.880	0.630	3.440	0.440	2