Catalog No.:_____

Job/Title:_____

Notes: _____

SPECIFICATION & FEATURES

MASONRY BOXES WITH DEVICE EARS 2-1/2” DEEP

DESCRIPTION:

Orbit Industries' Masonry Boxes are used in the installation of electrical fittings and other devices in masonry walls. They are constructed from 16 gauge galvanized steel. These 2-1/2" deep, welded boxes with device ears include an FB bracket to directly mount on the flat side of a stud. Models range from 3 to 5 gang switch boxes.

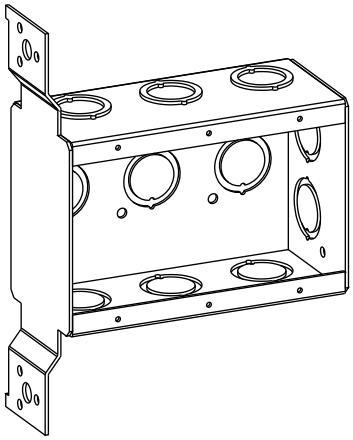

CERTIFICATION:

UL file E227970, conforms to UL514A.

FEATURES

Knockout:

CKO: Concentric K.O. (1/2” and 3/4" K.O.)

Bracket:

FB: (L: 7-3/8”, W: 1-9/16") Offset (9/16”) Mounts on flat side of stud

DIMENSIONS

Depth: 2-1/2”

Other Dimensions see below

CONFIGURATION DATA

Catalog No.	No. of Gangs	Bracket & Setback	Knockouts		WxH	Cu.In.	Std. Pkg.
			Sides	Bottom			
MSB-3-FB	3	FB, 9/16"	(8)-CKO	(3)-CKO	5-1/2”x3-3/4”	47.9	20
MSB-4-FB	4	FB, 9/16"	(10)-CKO	(4)-CKO	7-3/8”x3-3/4”	63.6	20
MSB-5-FB	5	FB, 9/16"	(12)-CKO	(5)-CKO	9-1/8”x3-3/4”	79.6	20

