Catalog No.:_____

Job/Title:_____

Notes: _____

# SPECIFICATION & FEATURES

## FLOOR/WALL SUPPORT BRACKET

### DESCRIPTION:

Orbit Industries' Floor/Wall Support Brackets can be mounted on wood or metal studs in floors or walls and are used to support conduit boxes. They are constructed from 16 gauge galvanized steel. They provide flexibility with infinite height and width combinations. An Ultimate Support Bracket (USB) must be accompanied by either an US4SB or an US5SB mounting bracket to attach on a steel box.

### CERTIFICATION:

UL file E227970, conforms to UL514A. acceptable for use in 2-hour fire rated walls.

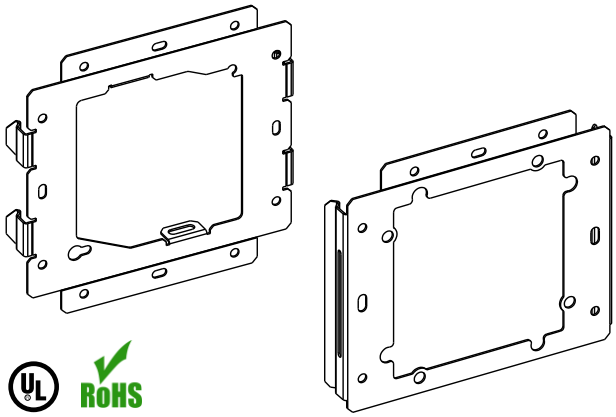

### FEATURES

- Can be floor or wall mounted on wooden or metal studs
- Infinite height and width combinations
- Provides flexibility at the job site
- US4SB or US5SB must be used to attach steel box to USB

### CONFIGURATION DATA

| Catalog No. | Description | Std. Pkg. |
|---|---|---|
| USB | Ultimate Support Bracket, Adj. 8"-24" as a floor bracket or 14"-24" as wall bracket | 12 |
| US4SB | Mounting Bracket for 4"(4S)Box, snaps to USB | 24 |
| US5SB | Mounting Bracket for 4-11/16"(5S)Box, snaps to USB | 50 |
| USBS | Far-Side Back Support for 4"(4S) and 4-11/16"(5S) Boxes | 50 |
| USDBM | For Use with USB to create a double box in floor mount assembly with built-in back support | 50 |
| USTBM | For Use with USB to create a triple box in floor mount assembly with built-in back support | 50 |
| USTS | USB floor mount stud to stud top support | 50 |
| USB-4SDB-50/75-PT | Complete Pre-Assembled Floor Bracket with a 4"(4S)2-1/8" Deep Box mounted, Includes installed Far-Side Back Support and Ground Pigtail | 12 |
| USB-5SDB-50/75-PT | Complete Pre-Assembled Floor Bracket with a 4-11/16"(5S)2-1/8" Deep Box mounted, Includes installed Far-Side Back Support and Ground Pigtail | 12 |

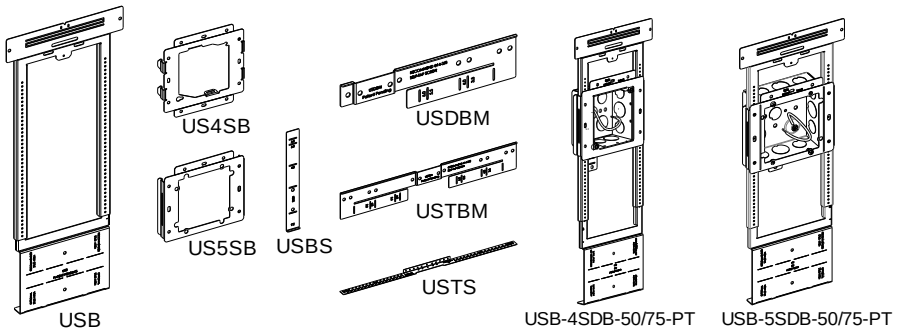


DESIGNED IN THE U.S.A.

www.orbitelectric.com

Application and Performance Specification Information is Subject to Change Without Notification