Pipe Wireholders

Applications

Secures wires before entry into a mast or SE cap

Features

Protects sheathing

Standard Materials

Porcelain



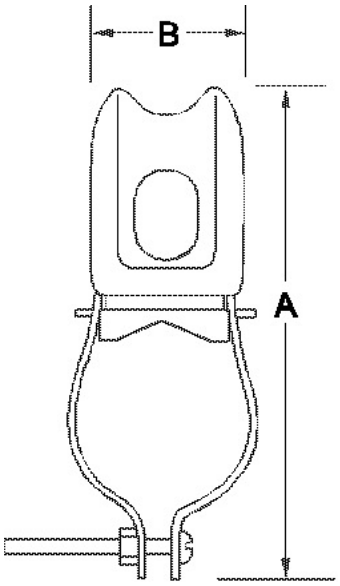

Catalog Number	Trade Size	Porcelain Opening	Standard Pkg.	LBS. / 100 PCS	UPC	Dim. A	Dim. B
* B3625	1/4″ X 2″	3/8″ X 1/2″	100	26	95020	3.64	1.39
** B3627	3/8″ X 2-1/2″	7/8″ X 1″	50	64	95022	5.55	2.10

* Fig. 1
** Fig. 2

Compliance

Source: https://peco-electric.com/products/installation-supports-pipe-wireholders/