Outlet Boxes

Type: T

Applications

Installed in conduit systems within hazardous areas to protect conductors in threaded rigid conduit

Features

Suitable for NEMA 4X applications

Standard Materials

Aluminum

Standard Finish

Powder Coated



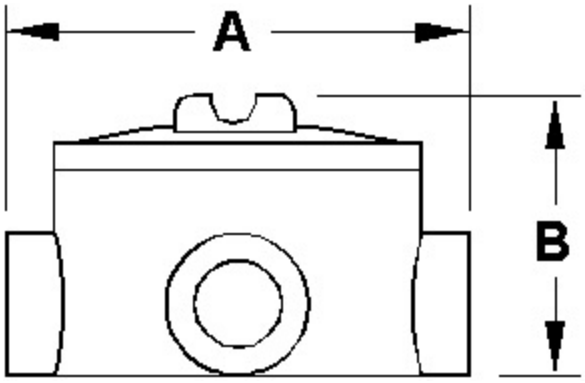

Catalog Number	Trade Size	Unit Pkg.	Standard Pkg.	LBS. / 100 PCS	UPC	Dim. A	Dim. B	Internal Volume (In3)
GUAT-50A	1/2″	1	5	120	19346	4.62	2.91	15
GUAT-75A	3/4″	1	5	120	19348	4.62	2.91	15
GUAT-100A	1″	1	5	140	19350	4.88	3.31	17.3

Compliance

Source: https://peco-electric.com/products/hazardous-locations-outlet-boxes-aluminum-type-t/