DRI-21-EMGR-DC-D10

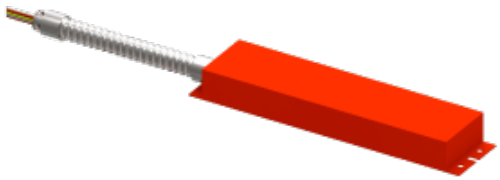

Weight: 3.2 lbs

Project:	**Type:**
Prepared By:	**Date:**

Technical Specifications

Performance

Product Type:
Emergency Driver

Description:
Field installable battery back up for direct mount downlights.

Input Power (W):
8W

Output Power:
20W

L70 Lifespan:
50,000-Hour LED lifespan based on IES LM-70 results

Electrical

Input Voltage:
100-277V AC

Output Voltage:
200VDC

Operating Frequency:
50/60Hz

Operating Temperature:
32°F to 140°F (0°C to 60°C)

Battery Operation:
90 minutes

Battery Type:
Lithium

Discharge Temperature:
32°F to 140°F (0°C to 60°C)

Storage Temperature:
-4°F to 113°F (-20°C to 45°C)

Storage Shelf Life:
1-year

Emergency Characteristics

Recharge Time Required:
24-hours

Installation

Mounting:
Recessed Housing

Construction

Shape:
Rectangle

Finish:
Red

Enclosure Material:
Metal

Compliance

Listings:
UL924 Listed

Environment:
Suitable for use in dry and damp environments

IC Rated:
No

Certification Model Number:
DRI-21-EMGR-DC-D10

T20 Compliant:
Can be used to conform with the requirements of California Title 20

California Title 24 JA8 Compliant:
Not Compliant

California Energy Commission (CEC) Status:
Lawful for Sales in California

RoHS:
Mercury and UV free. RoHS-compliant components.

FCC:
Complies with Part 15B of the FCC Rules

Copyright © 2026 RAB Lighting All Rights Reserved Note: Specifications are subject to change at any time without notice

Technical Specifications (continued)

Other

5-Year Limited Warranty:

The RAB 5-year, limited warranty covers light output, driver performance and paint finish. RAB's warranty is subject to all terms and conditions found at rablighting.com/warranty.

Dimensions

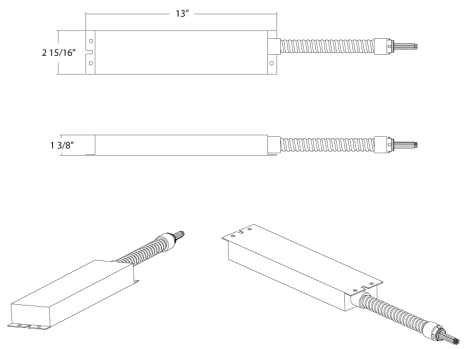

Features

- For use with select RAB Commercial Downlights
- Meets UL924 Requirements

Copyright © 2026 RAB Lighting All Rights Reserved Note: Specifications are subject to change at any time without notice