R3

RAB Outdoor



Sand cast aluminum "Y" adapter mounts two floodlights in a single 1/2" threaded hole.

Color: Natural

Weight: 0.1 lbs

Project:	Type:
Prepared By:	Date:

Technical Specifications

Listings

UL Listing:

Suitable for wet locations

Other

Outlet Box Construction:

Precision die cast aluminum

Buy American Act Compliance:

RAB values USA manufacturing! Upon request, RAB may be able to manufacture this product to be compliant with the Buy American Act (BAA). Please contact customer service to request a quote for the product to be made BAA compliant.

Construction

Outlet Box Mounting Lugs:

16 gauge corrosion protected steel with Phillips Flat head mounting screws

Ground Screw:

#10-24 Green corrosion protected steel slotted hex washer head screw provided in pre-tapped hole

Dimensions

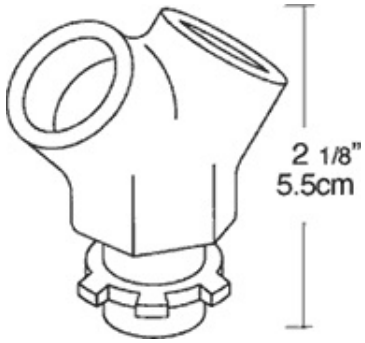

Features

- Sand cast aluminum
- Mounts two floodlights
- 1/2" threaded hole

Copyright © 2018 RAB Lighting Inc. All Rights Reserved Note: Specifications are subject to change at any time without notice