R3



Sand cast aluminum "Y" adapter mounts two floodlights in a single 1/2" threaded hole.

Color: Natural

Weight: 0.1 lbs

Project:	Type:
Prepared By:	Date:

Technical Specifications

Compliance

UL Listed:
Suitable for wet locations

Trade Agreements Act Compliant:
This product is a product of Cambodia and a "designated country" end product that complies with the Trade Agreements Act

Other

Outlet Box Construction:
Precision die cast aluminum

Installation

Outlet Box Mounting Lugs:
16 gauge corrosion protected steel with Phillips Flat head mounting screws

Construction

Ground Screw:
#10-24 Green corrosion protected steel slotted hex washer head screw provided in pre-tapped hole

Copyright © 2026 RAB Lighting All Rights Reserved Note: Specifications are subject to change at any time without notice

Dimensions

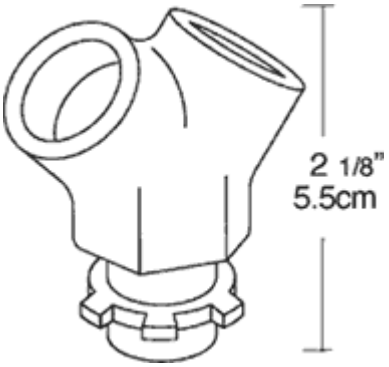

Features

- Sand cast aluminum
- Mounts two floodlights
- 1/2" threaded hole

Copyright © 2026 RAB Lighting All Rights Reserved Note: Specifications are subject to change at any time without notice