salzer

LOAD BREAK
SWITCHES



www.salzergroup.com

INDEX

Contents	Page No.
General	
Technical Data	1
Switching Programmes	2
Front Mounting	3
Rear Mounting	5
Plastic Enclosure Mounting	7
Metal Enclosure Mounting	8
Accessories	10
Changeover Switches	13
Enclosure Changeover Switches	15
Product Coding	16

LB Series Load Break Switches comply with the latest specifications for modern low voltage devices.

Outstanding electrical characteristics of LB Switches with compact design, contribute to space saving installation and operational convenience.

Basic construction and design of the switch makes it compact, safe and highly reliable.

The switch uses polyamide glass filled material, having excellent track resistance (CTI) for Insulation to prevent flashover between phases in the most severe conditions.

The special contact design and configuration makes the switch highly reliable to withstand high short circuit currents.

FEATURES

- Double break contacts.
- Polycarbonate shroud for wired terminal protection is included.
- Excellent switching and high short circuit capacity.
- Compact and reliable.
- Easy installation.
- Versatile mounting options, i.e. front mounting, rear mounting DIN 35 and enclosure mounting.
- Quick, simple and convenient, dia. 22.5 mm single hole mounting is offered for 16A/20A switches with padlocking option.
- Finger protection - IP 20
- Terminal screws with fixed clamp for easy wiring.
- Add-on main/neutral/auxiliary contacts can be mounted on both sides of the switch at site.
- 4th Pole addition is possible at site.

APPLICATIONS

- Isolator
- Motor Start and Stop
- Manual Motor controller as Motor Disconnect
- Main Switch
- Emergency ON-OFF
- Control Switch
- Changeover Switch

Notes

Technical Data

UL STANDARD	UL508
EUROPEAN STANDARD	IEC60947-1 and3, EN60947-3

DATA	Measure	Switch code	LB116	LB120	LB225	LB232	LB240	LB263	LB4080	LB4100	LB4125	LB5160	LB6250
Rated operational voltage Ue													
IEC/EN	Volts	V	690	690	690	690	690	690	690	690	690	690	690
UL	Volts	V	600	600	600	600	600	600	600	600	600		
Main switch:Isolating voltage upto	Volts	V	750	750	750	750	750	750	750	750	750	800	800
Resistance to surge pulse voltage Uimp	Volts	kV	6	6	6	6	6	6	6	6	6	8	8
Rated uninterrupted current Iu	Amp	A	16	20	25	32	40	63	80	100	125	160	250
Rated operational current Ie													
IEC / EN													
AC22	Amp	A	16	20	25	32	40	63	80	100	125	160	250
AC-21A	Amp	A	20	25	32	40	63	80	80	100	125	160	250
AC-1	Amp	A	20	25	32	40	63	80	80	100	125	160	250
Rated operational power at 50 to 60Hz													
AC-23A IEC/EN													
3Phase, 3Pole	220-240V	kW	7.5	7.5	11	15	22	30	37	44	60		
	380-440V	kW	15	15	22	22	45	45	90	90	90	80	132
	500-690V	kW	15	15	22	22	45	45	90	90	90	55	90
AC-3 IEC/EN													
3Phase, 3Pole	220-240V	kW	4	5.5	8	11	15	22	30	37	44		
	380-440V	kW	5.5	11	15	15	30	30	55	55	55		
	500-690V	kW	11	11	15	15	30	30	55	55	55		
Short circuit capacity: (IEC/EN)													
Max .Fuse size (Type gG)	Amp	A	20	20	32	32	63	63	125	125	125	160	250
Rated fused short circuit current	Amp	kA	5	5	30	30	30	30	30	30	30	50	50
UL RATING (POWER)													
DOL RATING													
3PHASE 3POLE	120V	HP	1.5	1.5	3	3	5	7.5	5	7.5	7.5		
	240V	HP	3	3	7.5	7.5	10	15	20	20	30		
	480V	HP	7.5	7.5	15	20	20	25	30	30	40		
	600V	HP	10	10	20	25	30	30	40	40	50		
1PHASE	120V	HP	0.5	0.5	1.5	2	3	3	3	3	3		
	240V	HP	1.5	1.5	2	3	5	7.5	7.5	7.5	7.5		
Short Circuit Capacity: (UL)													
Fuse	Type	Class	Rk5	Rk5	J	J	J	J	J	J	J		
Maximum Fuse Size	Amp	A	20	20	45	45	70	70	125	125	125		
Rated fused Short circuit current	Amp	kA	10	10	10	10	10	10	10	10	10		
Terminal Cross section													
Single/multiple strand wire		Min-mm^2	1	1	2.5	2.5	2.5	2.5	2.5	2.5	2.5	10	95
		Max-mm^2	4	4	10	10	25	25	50	50	50	95	150
Fine-Strand Wire with sleeve		Min-mm^2	0.5	0.5	0.75	0.75	2.5	2.5	4	4	4		
		Max-mm^2	4	4	6	6	10	10	50	50	50		
American wire Gauge		AWG	12	12	10	10	6	6	1	1	1		
Thread Dimension for Terminal Screw			M3.5	M3.5	M4	M4	M4	M4	M6	M6	M6	M8	M10
Recommended Tightening Torque for terminals	Nm		0.8	0.8	1.7	1.7	2	2	2.5	2.5	2.5	9	20

Switching Programmes

LB116, LB120, LB225, LB232, LB240, LB263,LB4080, LB4100, LB4125, LB5160, LB6250,

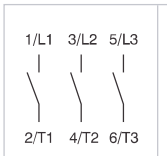	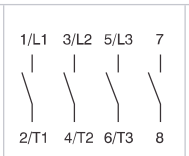	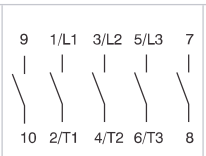	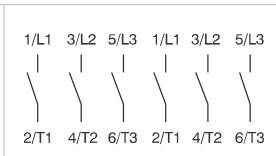	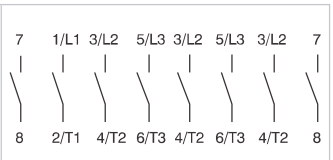
3 Pole	3 Pole + 1 Main Module	4 Pole + 1 Main Module	6 Pole	8 Pole
31300	31400	31500	31600	31800
31309	31409	31509	31609	31809

LB116, LB120 Available upto 5 Pole only

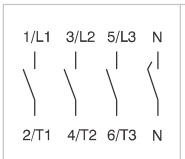	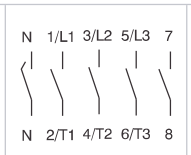	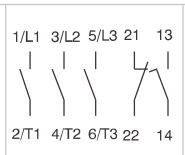	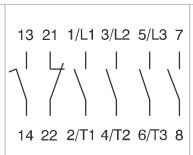	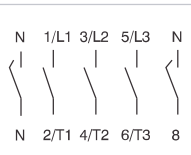	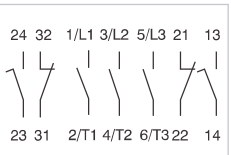
3 Pole+ 1 Neutral Module	4 Pole+ 1 Neutral Module	3 Pole+ 1 Auxillary Module	4 Pole+ 1 Auxillary Module	3 Pole+ 2 Neutral Modules	3 Pole+ 2 Auxillary Modules
31310	31410	31320	31420	31330	31340
31319	31419	31329	31429	31339	31349

LB4080, LB4100, LB4125

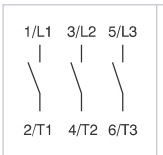	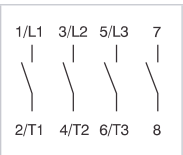	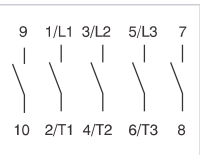	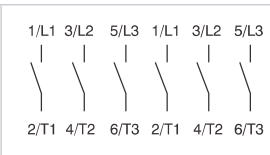	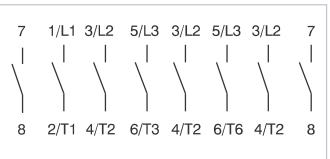
31309	31409	31509	31609	31809

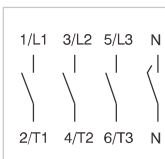	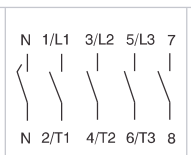	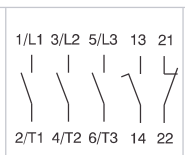	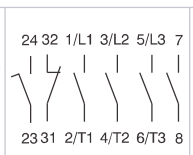	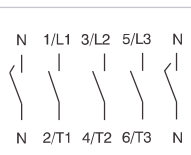	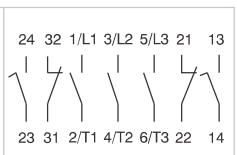
31319	31419	31329	31429	31339	31349

Front Mounting

B03



16A-20A

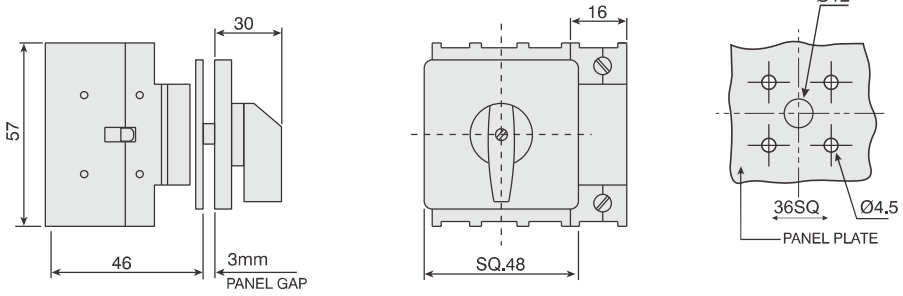

- 4 hole front panel mounting.
- Degree of protection : Front IP55.
- Fifth pole can be fitted on the other side of the switch

B13



25A-63A

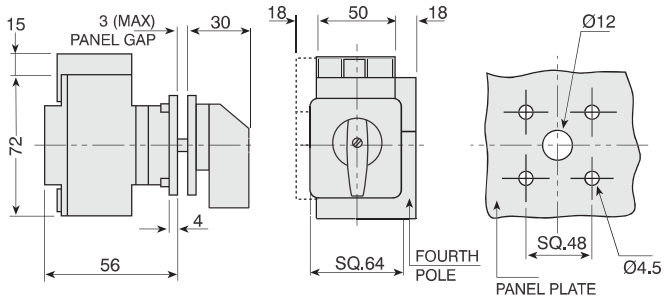

- FIFTH POLE CAN BE FITTED ON THE OTHER SIDE OF THE SWITCH

- 4 hole front panel mounting.
- Degree of protection : Front IP55.

B33



25A-63A

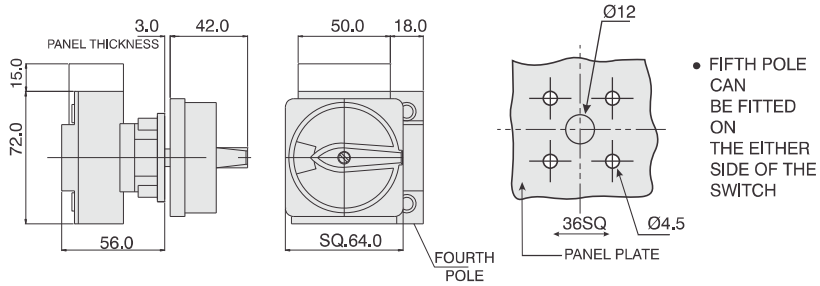

- FIFTH POLE CAN BE FITTED ON THE EITHER SIDE OF THE SWITCH

80A to 125A

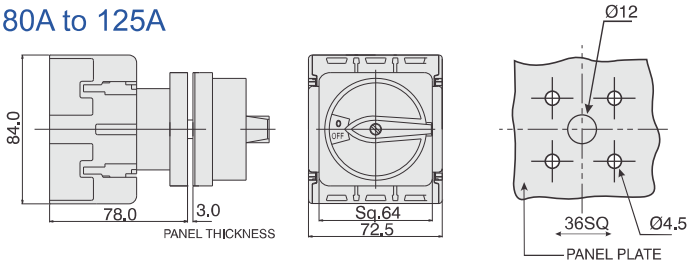

- 4 hole front panel mounting.
- Degree of protection : Front IP65.
- Switch with round padlocking device to prevent from being switched ON by unauthorised personnel.
- Max 3 padlocks.

Front Mounting

B30



25A-63A

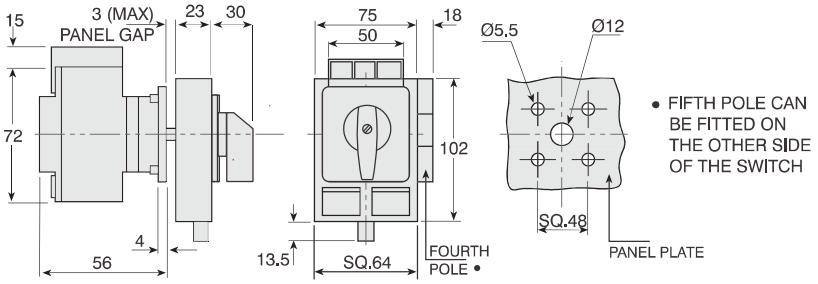

- 4 hole front panel mounting.
- Degree of protection : Front IP55.
- Switch with rectangular padlocking device to prevent the Switch from being switched ON by unauthorised personnel.
- Max 4 padlocks.

B40



16A-20A

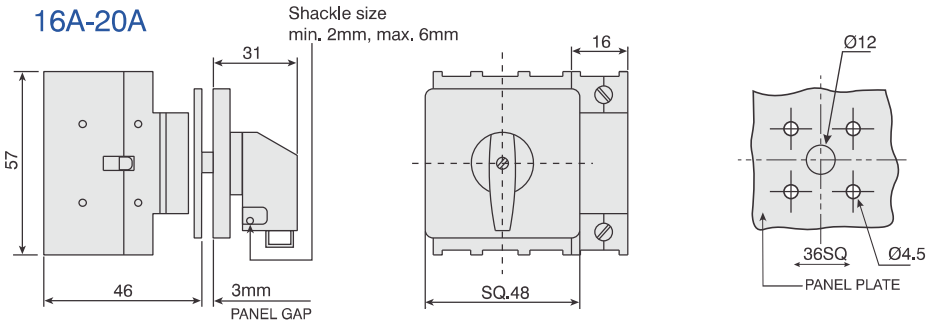

- 4 hole, front panel mounting.
- Degree of protection : Front IP55.
- Switch with padlockable flag knob.
- Max. 1 padlock.

B63



25A-63A

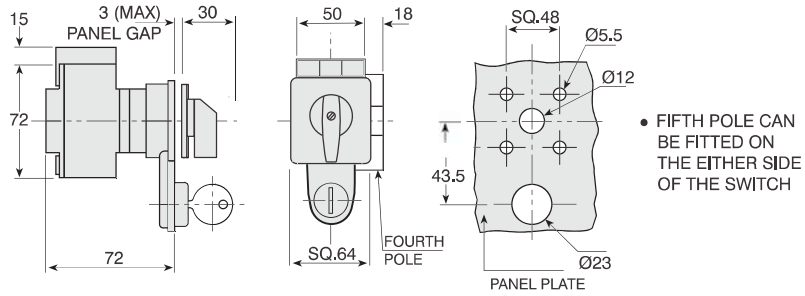

- 4 hole front panel mounting.
- Degree of protection : Front IP55.
- Knob operated, keylock, key removable in OFF position. (Other options on request)

B19



16A-63A

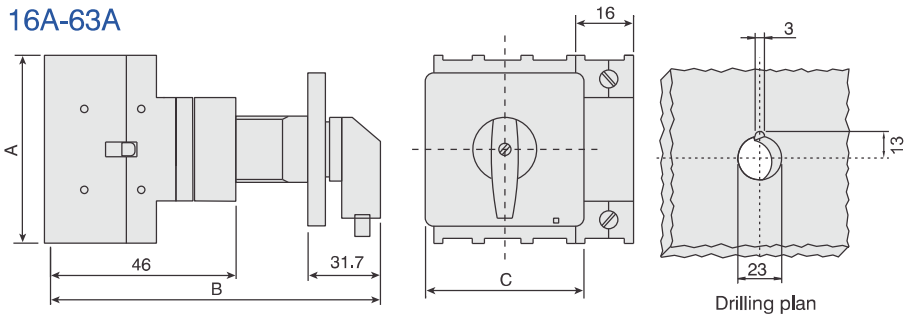

- Dia 22.5mm, single hole panel mounting.
- Degree of protection : Front IP55.
- Switch with padlockable flagknob.
- Maximum 1padlock

AMPS	A	B	C
16 - 20A	57	100	36
25 - 63A	72	110	50

All dimensions in mm.

Rear Mounting

B23DB



25A-63A

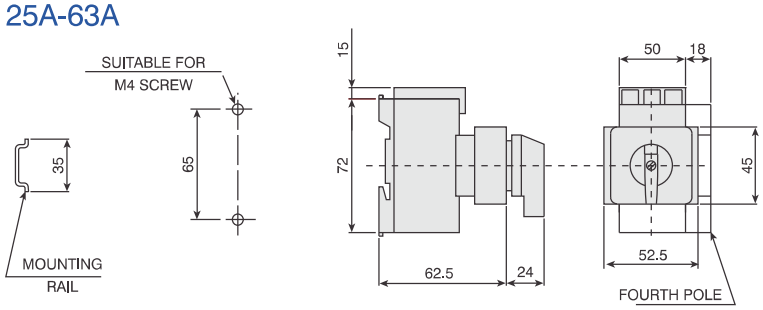

- 2 hole rear mounting.
- Alternately snap mounting on DIN EN50022 rail (35mm).
- Degree of protection : Front IP30.
- Suitable for DB Panel

B23



- 2 hole rear mounting.
- Alternately snap mounting on DIN EN50022 rail (35mm).
- Degree of protection : Front IP30.

25A-63A

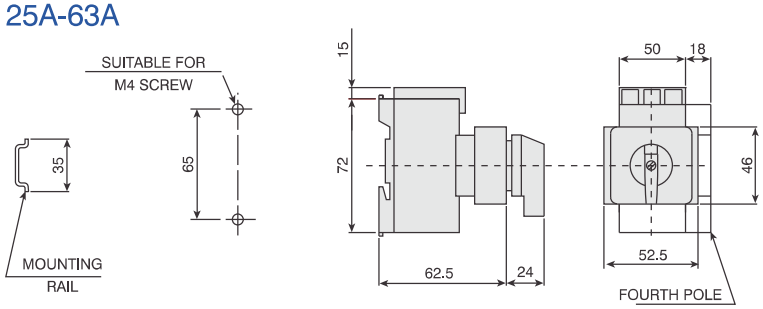

80A-125A

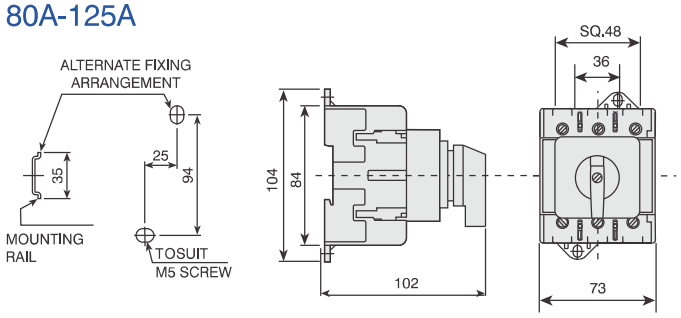



- 4 Hole Rear mounting and operable from the front (Door) coupled with door Mechanism.
- Door interlock (Door operable only in OFF Position)
- Degree of protection : Front Ip65
- Rigid metal shaft / Switch Assembly.
- Specific length of shaft can be offered on request.

160A & 250A

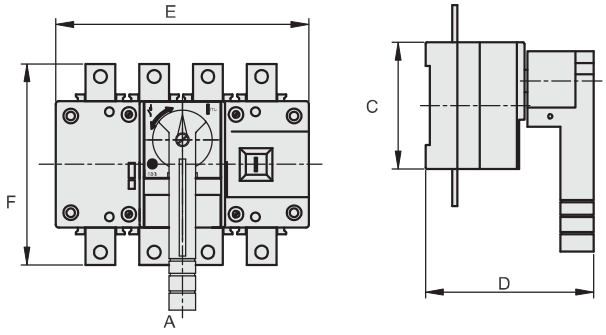

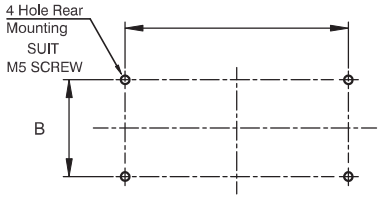

Type	A	B	C	D	E	F
LB5160	150.5	65.5	85	113	170	135
LB6250	210.5	90.5	110	130	230	170

All dimensions in mm.

Rear Mounting

MB34



2 hole rear mounting or snap mounting on DIN EN50022 rail (35mm) and operable from the front (door) coupled with door mechanism.

Door interlock (door openable only in OFF position).

Degree of protection : Front IP65. | Rigid metal shaft/switch assembly.

| Switch with round padlocking device to prevent the Switch from being made ON by unauthorised persons.

Max.3 padlocks as under.
16A-20A: Max. 1 padlock
25A-63A: Max. 3 padlocks
80A-125A: Max. 3 padlocks

25A-63A

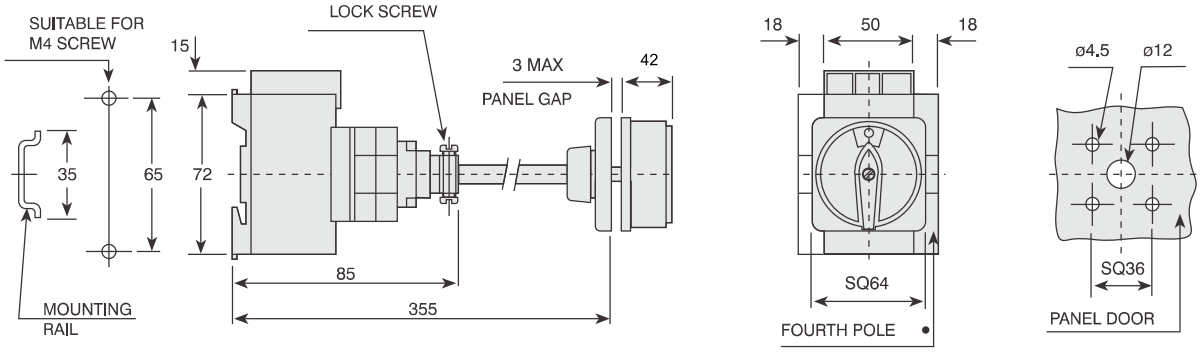

80A-125A

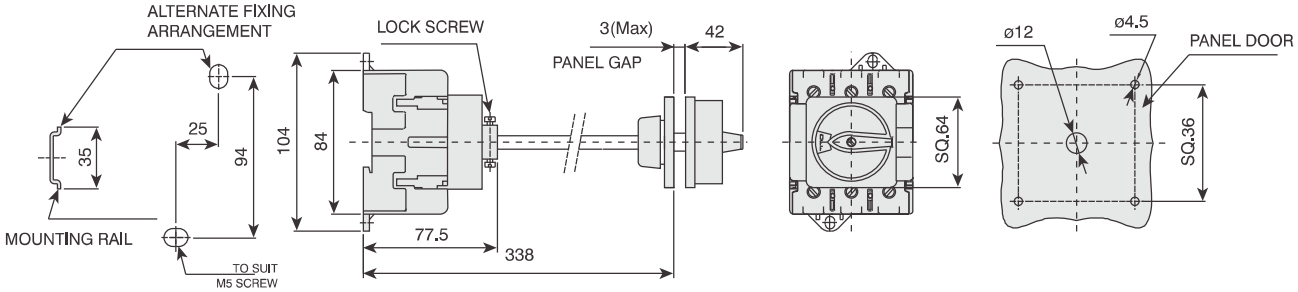

■ Adjustable mounting by cutting the metal shaft to suit panel height. ■ Specific Length of shaft can be offered on request.

160A-250A

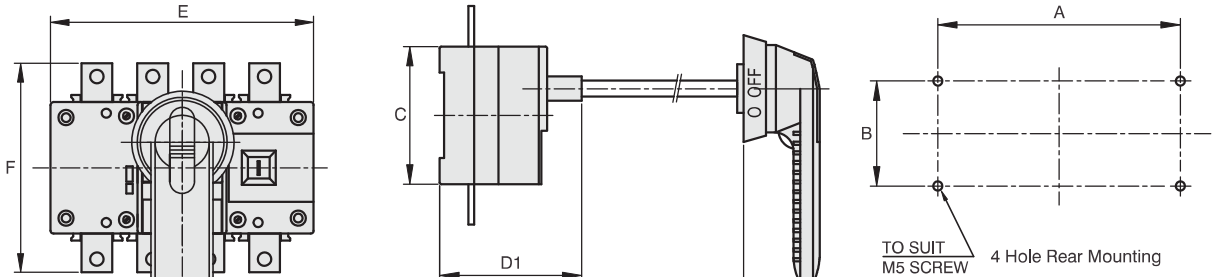

Drilling Pattern

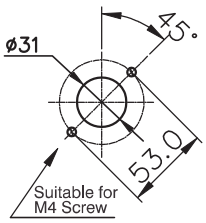

Type	A	B	C	D1	D2	E	F
LB5160	150.5	65.5	85	86	120	170	135
LB6250	210.5	90.5	110	100	135	230	170

- 4 Hole Rear mounting and operable from the front (Door) coupled with door Mechanism.
- Door interlock (Door operable only in OFF Position)
- Degree of protection : Front Ip65
- Rigid metal shaft / Switch Assembly.
- Specific length of shaft can be offered on request.

All dimensions in mm.

Plastic Enclosures

B31SM



- Switch mounted in ABS / polycarbonate (optional) enclosure.
- Round padlocking device (Max.3 padlocks) to prevent the Switch from being made to ON by unauthorised personnel.
- Knob version available on request.
- Switch rear mounted for easy connection.
- Door interlock-cover cannot open in ON condition
- Tested for Nema Ratings 1,2,3,3R, 4,4x,12 & 13 asper UL50&Nema 250

16A-20A

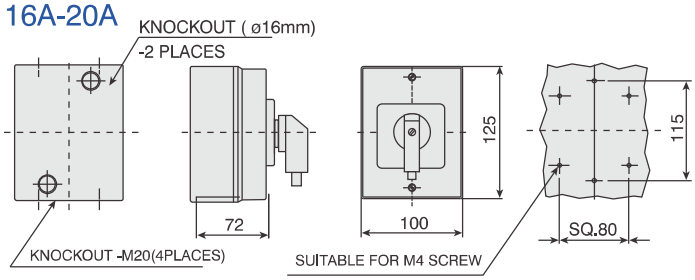

25A-32A

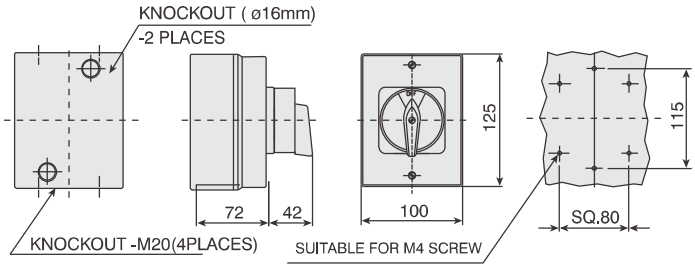

- Degree of protection : IP65.
- RED / YELLOW-handle colour for MAIN / EMERGENCY Switches.
- Enclosure colour : Dark grey base and light grey cover.
- Fourth pole can be added.
- 25A/32A - 6 Pole/8Pole can be offered in B31L

B31M



- Switch mounted in ABS enclosure, optional in polycarbonate.
- Tested for Nema Ratings 1,2,3,3R, 4, 4x,12 & 13 asper UL50&Nema 250

25A to 63A

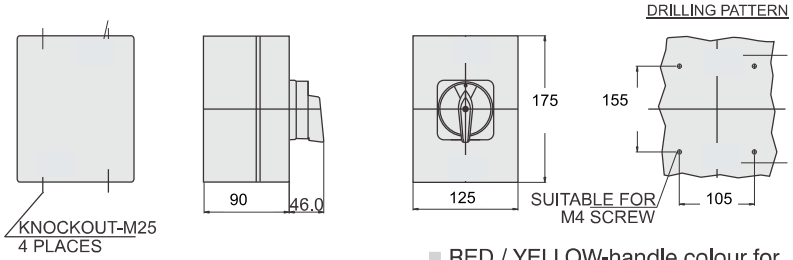

- Round padlocking device (Max.3 padlocks) to prevent the Switch from being made to ON by unauthorised personnel.
- Degree of protection : IP65.
- Switch rear mounted for easy connection.
- Door interlock-cover cannot open in ON condition
- RED / YELLOW-handle colour for MAIN / EMERGENCY Switches.
- Enclosure colour : Dark grey base and light grey cover.
- Fourth and Fifth pole can be added.
- 6 Pole/8Pole can be offered in B31L

B31L



- Switch mounted in ABS / polycarbonate (optional) enclosure.
- Door interlock-cover cannot open in ON condition

80A-125A

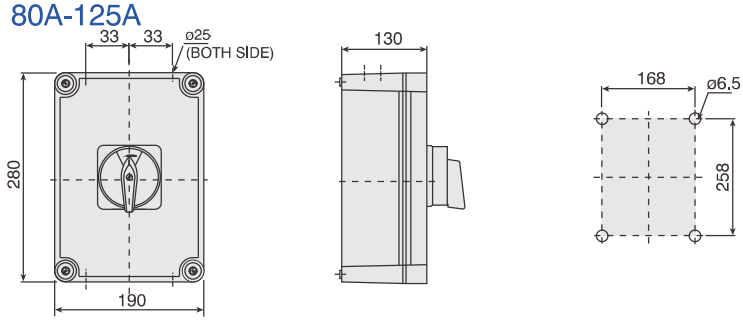

- Degree of protection : IP65.
- Switch rear mounted for easy connection.
- Leech Handle (Max.1 padlock) to prevent the Switch from being made to ON by unauthorised personnel.
- RED / YELLOW-handle colour for MAIN / EMERGENCY Switches.
- Interlock provided to open the lid only in OFF position.
- Enclosure colour : Grey.
- Fourth and fifth pole can be added.
- Tested for Nema Ratings 1,2,3,3R, 4,4x,12 & 13 asper UL50&Nema 250

All dimensions in mm.

Metal Enclosures

AB31S



- Switch mounted in aluminium enclosure.
- Degree of protection : IP53.

Upto 25A

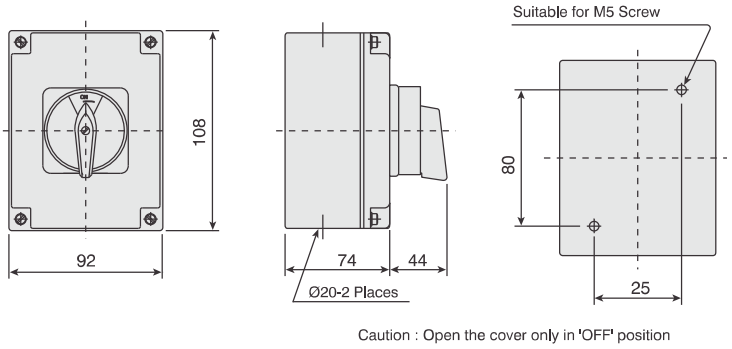

Caution : Open the cover only in 'OFF' position

- Round padlocking device (max. 3 padlocks) to prevent the Switch from being made to ON by unauthorised personnel.
- RED / YELLOW-handle colour for MAIN / EMERGENCY Switches.
- Enclosure colour : Dark grey base and light grey cover.

AB31M



- Switch mounted in aluminium enclosure.
- Degree of protection : IP65.
- RED / YELLOW-handle colour for MAIN / EMERGENCY Switches.

32A to 40A

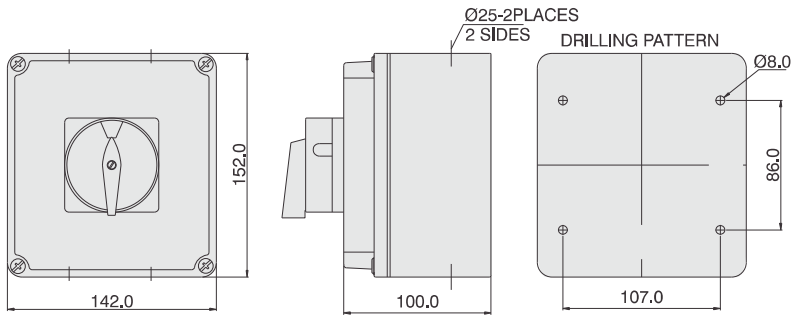

- Round padlocking device (max. 3 padlocks) to prevent the Switch from being made to ON by unauthorised personnel.
- Enclosure colour : Dark grey base and light grey cover.
- Fourth pole can be added.

SB31M



- Switch mounted in Steel enclosure.
- Round padlocking device (max. 3 padlocks) to prevent the Switch from being made to ON by unauthorised personnel.

32A - 63A

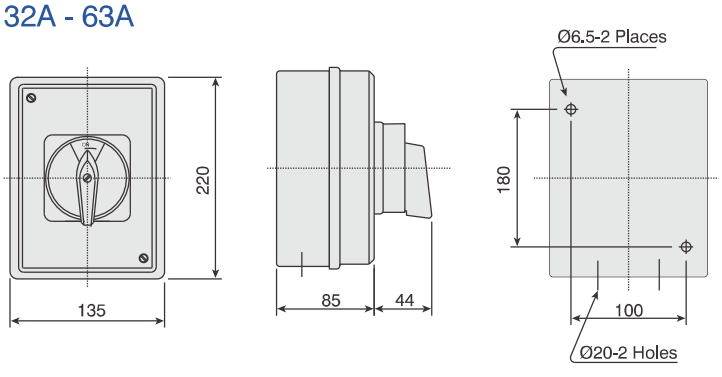

Caution : Open the cover only in 'OFF' position

- Degree of protection : IP53.
- Knob version available on request.
- RED / YELLOW-handle colour for MAIN / EMERGENCY Switches.
- Enclosure colour : Dark grey base and light grey cover.
- Fourth pole can be added.
- 6 Pole/8Pole can be offered in SB31L

All dimensions in mm.

SB31L



80A-125A

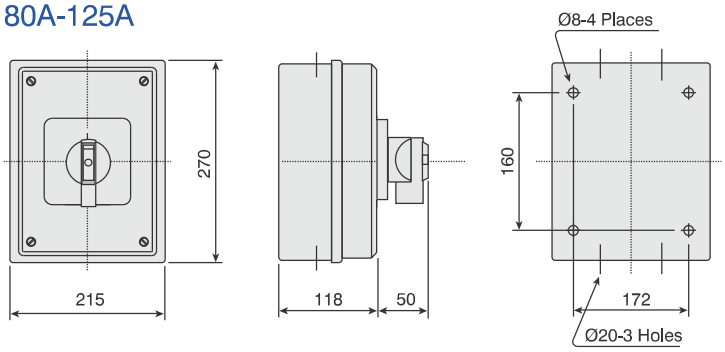

Caution : Open the cover only in 'OFF' position

- Switch mounted in Steel enclosure.
- Round padlocking device / Leech handle (max. 3 padlocks) to prevent the Switch from being made to ON by unauthorised personnel.
- Degree of protection : IP53.
- Knob version available on request.
- RED / YELLOW-handle colour for MAIN / EMERGENCY Switches.
- Enclosure colour : Dark grey base and light grey cover.
- Fourth pole can be added.
- 6 Pole/8Pole can be offered in SB31XL

Notes

Accessories

ADD ON MAIN POLE (16A-63A)



- Equivalent switch electrical rating
- Used as 4th/5th pole on either side of the switch

For Switch Code	Code for Front Mounting Switch	Code for Rear Mounting Switch
LB 116	FMC 116	RMC 116
LB 120	FMC 120	RMC 120

For Switch Code	Code for Front Mounting Switch	Code for Rear Mounting Switch
LB225	FMC225	RMC225
LB232	FMC232	RMC232
LB240	FMC240	RMC240
LB263	FMC263	RMC263

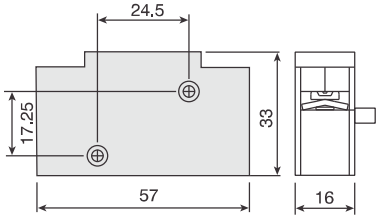

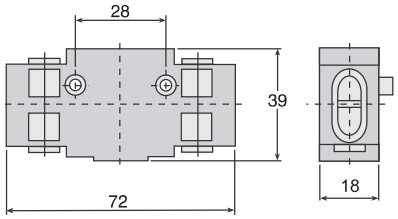

ADD ON MAIN POLE (80A-125A)



For Switch Code	Code for Front Mounting Switch	Code for Rear Mounting Switch
LB4080	FMC80	RMC80
LB4100	FMC100	RMC100
LB4125	FMC125	RMC125

- Equivalent switch electrical rating.
- Used as 4th/5th pole on either side of the switch.

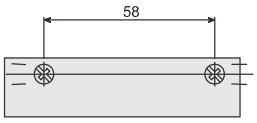

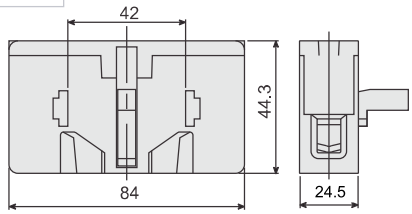

Applications

For switching action of additional pole, when mounted with the switch. The additional pole on either side of the switch can be used to switch on any single phase requirements simultaneously.

ADD ON NEUTRAL POLE (16A-63A)



- Early make late break contact.
- Can be fitted on either side of the switch.

Applications

To be used as Neutral Conductor to the switch.

For Switch Code	Code for Front Mounting Switch	Code for Rear Mounting Switch
LB116	FNC116	RNC116
LB120	FNC120	RNC120

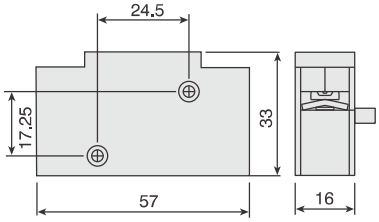

For Switch Code	Code for Front Mounting Switch	Code for Rear Mounting Switch
LB225	FNC225	RNC225
LB232	FNC232	RNC232
LB240	FNC240	RNC240
LB263	FNC263	RNC263

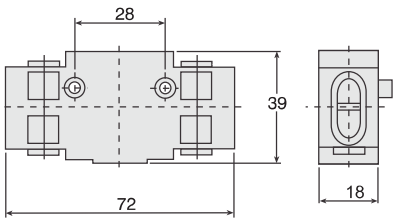

All dimensions in mm.

ADD ON NEUTRAL POLE (80A-125A)



- Early make late break contact.
- Can be fitted on either side of the switch.

Applications

To be used as Neutral Conductor to the switch.

For Switch Code	Code for Rear Mounting Switch	Code for Front Mounting Switch
LB4080	FNC80	RNC80
LB4100	FNC100	RNC100
LB4125	FNC125	RNC125

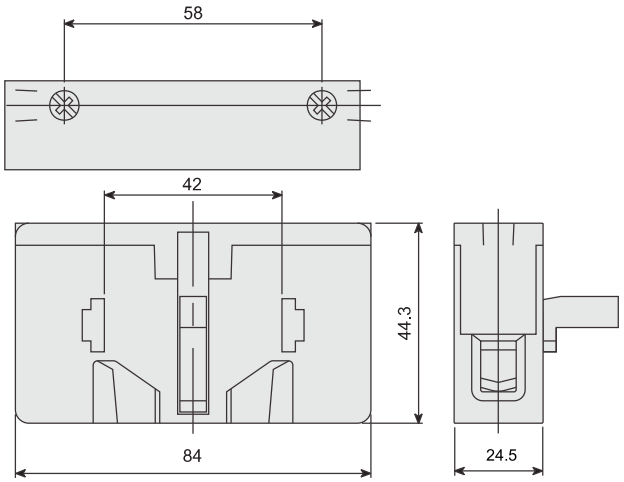

ADD ON AUXILIARY POLE



- 1 NO contact early break/late make + 1 NC contact.
- 2 NO contact early break/late make
- Can be fitted on either side of the Switch.

Applications

Auxiliary contact module has two contacts, 'NO and NC'. 'NO' contact is early break, late make contact. This is used to trigger any auxiliary circuits.

For Switch Code	Code for Front Mounting Switch 1NO+1NC	Code for Rear Mounting Switch 1NO+1NC	Code for 2 NO Front Mounting Switch	Code for 2 NO Rear Mounting Switch
LB116	FAC116	RAC116		
LB120				
LB225	FAC216	RAC216	LB263 FA2NO	LB263 RA2NO
LB232				
LB240				
LB263				
LB4080	FAC416	RAC416	LB4125 FA2NO	LB4125 RA2NO
LB4100				
LB4125				

LB116-LB120

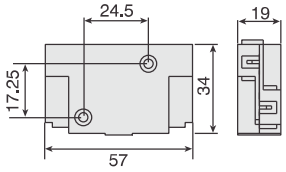

LB225-LB263

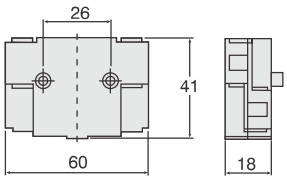

RATING

IEC / EN	16A, 500V	
AC-15	220-240V 380-440V	6A 4A

TERMINAL CROSS SECTION

Single/Multiple strand wire	min. mm²	1.0
	max. mm²	1.5
American Wire Gauge	AWG	16

LB4080-LB4125

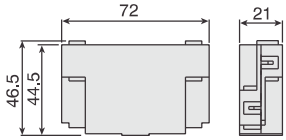

Accessories

KNOBS & HANDLES

	CODE	TYPE
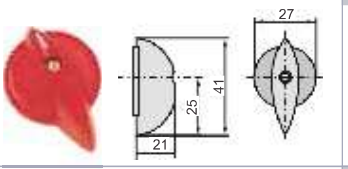	TD	Tear Drop Knob
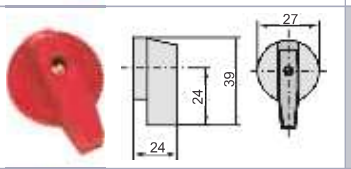	FL	Flag Knob
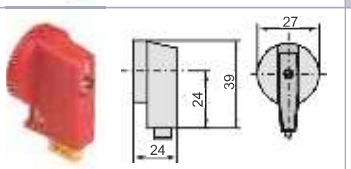	FP	Flag Knob Padlockable
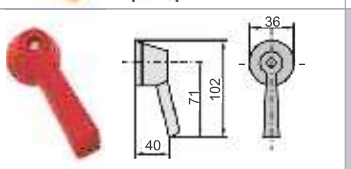	PG	Pistol Grip Handle
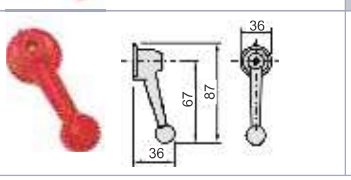	BG	Ball Grip Handle

	CODE	TYPE
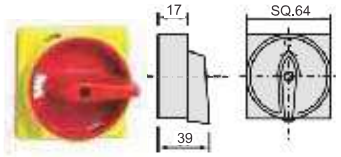	RD	Round Knob, Padlockable
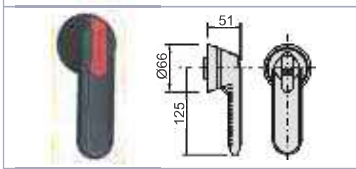	RH	Roll Handle, Padlockable
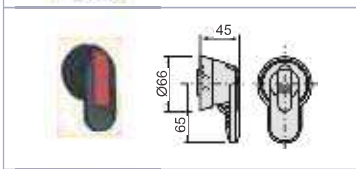	SH	Short Handle, Padlockable
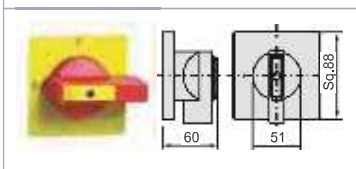	LH	Leech Handle, Padlockable

LB SWITCHES: KNOB/HANDLE AND MOUNTING OPTIONS

MOUNTING	LB116	LB120	LB225	LB232	LB240	LB263	LB4080	LB4100	LB4125
B03	FL , TD	FL , TD	-	-	-	-	-	-	-
B19	FP, FL, TD	FP, FL, TD	-	-	-	-	-	-	-
B40	FP	FP	-	-	-	-	-	-	-
B13	-	-	FL, PG, BG	FL, PG, BG	FL, PG, BG	FL, PG, BG	-	-	-
B30	-	-	TD, FL	TD, FL	TD, FL	TD, FL	-	-	-
B33	-	-	RD	RD	RD	RD	RD	RD	RD
B63	-	-	TD, FL	TD, FL	TD, FL	TD, FL	FL	FL	FL
B23	-	-	TD, FL	TD, FL	TD, FL	TD, FL	FL	FL	FL
MB34	FP	FP	SH, RD LH, RH	SH, RD LH, RH	SH, RD LH, RH	SH, RD LH, RH	RD LH, RH	SH,RD LH, RH	RD LH, RH
MB42	FL	FL	BG, PG,	BG, PG,	BG, PG,	BG, PG,	BG, PG,	BG, PG,	BG, PG,
AB31S,SB31S	RD	RD	RD	RD	RD	RD	-	-	-
B31SM, B31M,	FP	FP	RD	RD	RD	RD	-	-	-
AB31M,SB31M	-	-	RD	RD	RD	RD	-	-	-
B31L	-	-	-	-	-	-	RD, LH, BG, RH	RD, LH, BG, RH	RD, LH, BG, RH
SB31XL	-	-	-	-	-	-	BG, LH	BG, LH	BG, LH

LB SWITCHES: KNOB/HANDLE, ENCLOSURE MOUNTING OPTIONS

ENCLOSURE MOUNTING	B31SM	B31M	B31L	SB31S	SB31M	SB31L	AB31S	AB31M
Knob/Handle	RD, FP	RD	RD, LH	RD, BG, PG	RD BG, PG	LH, BG PG, RD	RD, FL BG, PG	RD BG, PG

The knobs/handles highlighted in blue are standard, others indicates possible options.

All dimensions in mm.

Changeover Switches

SWITCHING PROGRAMMES

CODE : 31153 3 POLE CHANGEOVER

	R	Y	B	R	Y	B
I	X	X	X			
O						
II				X	X	X

CODE : 31154 4 POLE CHANGEOVER

	R	Y	B	N	R	Y	B	N
I	X	X	X	X				
O								
II					X	X	X	X

Features

- 25A - 125A, 3 and 4 Pole, AC 23 duty.
- Available with and without SS enclosure.
- Different mounting options.
- Excellent switching performance.
- High short circuit capacity.
- Door interlock and padlock available.
- Provides adequate space for cable termination and very convenient for installation termination.

B13



25A-63A, Front Mounting

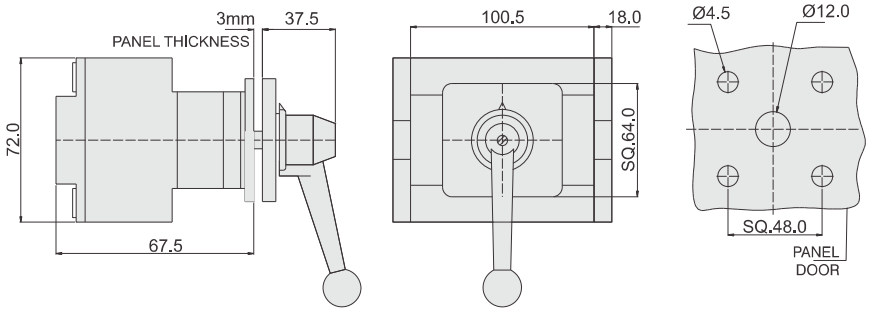

- 4 hole front panel mounting.
- Degree of protection : Front IP55.

B21



25A-63A, Rear Mounting

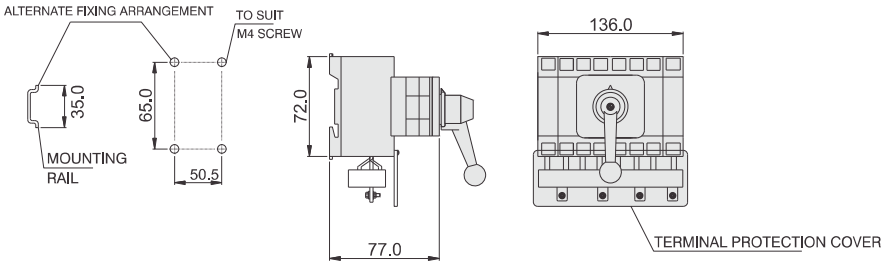

80A-125A, Rear Mounting

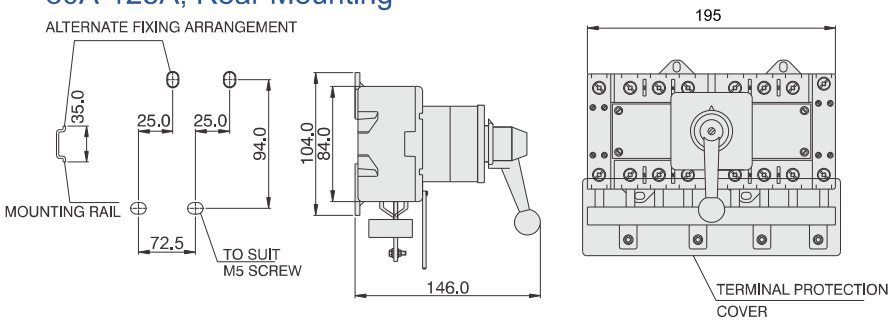

- 4 hole rear mounting.
- Degree of protection : Front IP55.

Changeover Switches

MB42



25A-63A, Rear Mounting

ALTERNATE FIXING ARRANGEMENT

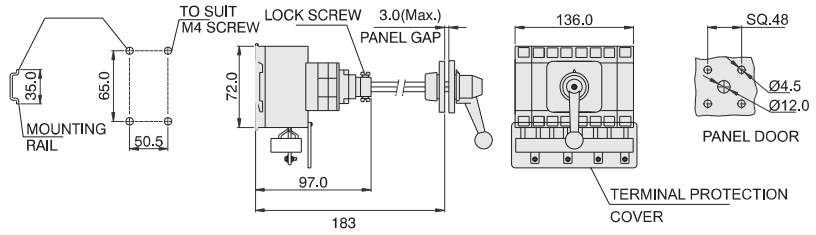

80A-125A, Rear Mounting

ALTERNATE FIXING ARRANGEMENT

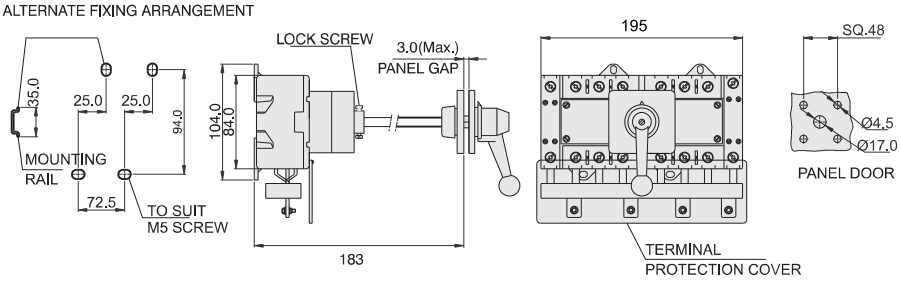

MB34



25A-63A, Rear Mounting

ALTERNATE FIXING ARRANGEMENT

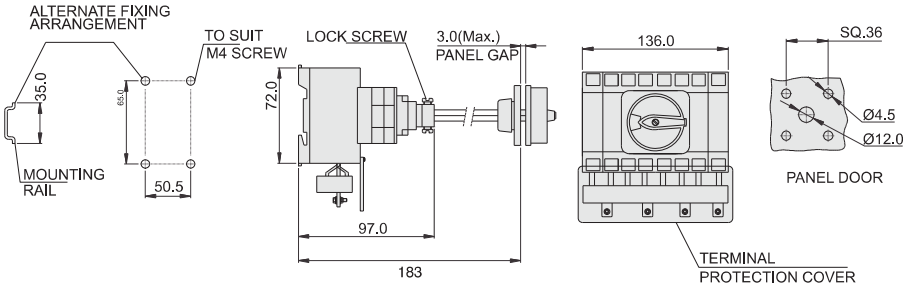

80A-125A, Rear Mounting

ALTERNATE FIXING ARRANGEMENT

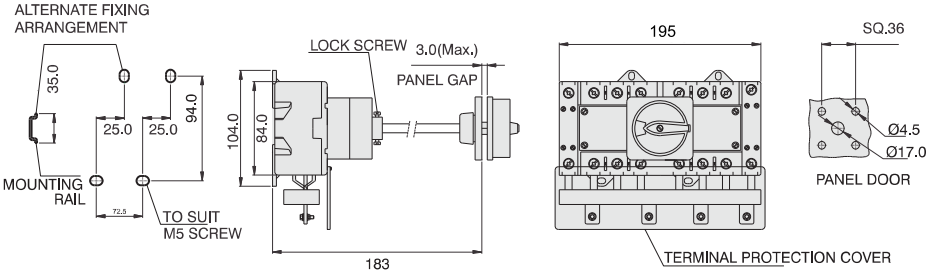

- 2 hole rear mounting or snap mounting on DIN EN50022 rail (35mm) and operable from the front (door) coupled with door mechanism.
- Door interlock (door operable only in OFF position)
- Degree of protection : Front IP65.
- Rigid metal shaft/Switch assembly.
- Switch with round padlocking device to prevent the Switch from being made ON by unauthorised persons.
- Max. 3 padlocks.
- Adjustable mounting by cutting the metal shaft to appropriate length to suit panel height.
- Specific length of shaft can be offered on request.

All dimensions in mm.

Enclosure Changeover Switches

Features

- 25A - 125A, 4 Pole, AC 23 duty.
- Range available : 3 Pole Changeover - 31153, 3 Pole + Neutral Pole Changeover - 31154
- Powder coated steel enclosure with separate earthing or IP65, ABS enclosure having interlock to open the lead only in OFF position for safety.
- Colour : Yellow front plate and Red ball grip handle

SB31



25A-63A

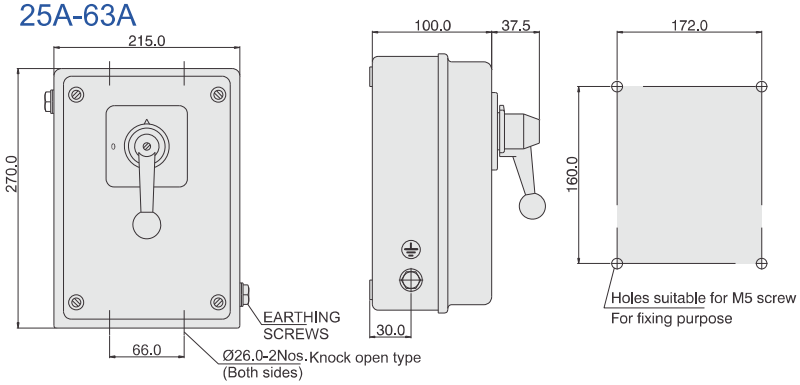

- Powder coated steel enclosure.
- Interlock provided to remove cover only in 'OFF' position for safety.
- Separate earthing provided.
- Colour : Yellow front plate and Red ball grip handle / grey front plate and Black ball grip handle.

B31L



63A

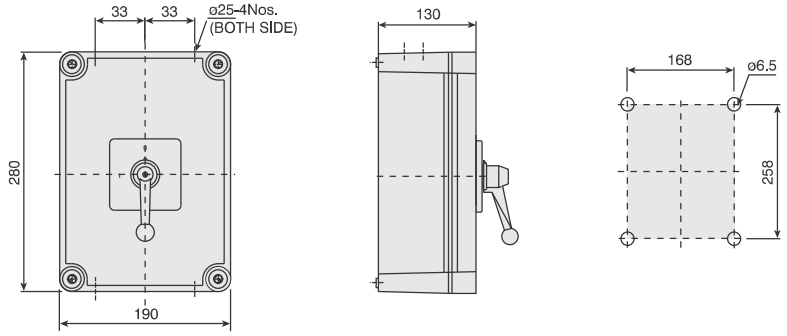

- Switch mounted in grey ABS/ Polycarbonate optional enclosure with IP65 protection and interlock provided to open the lid in OFF position.

SB31XL



80A-125A

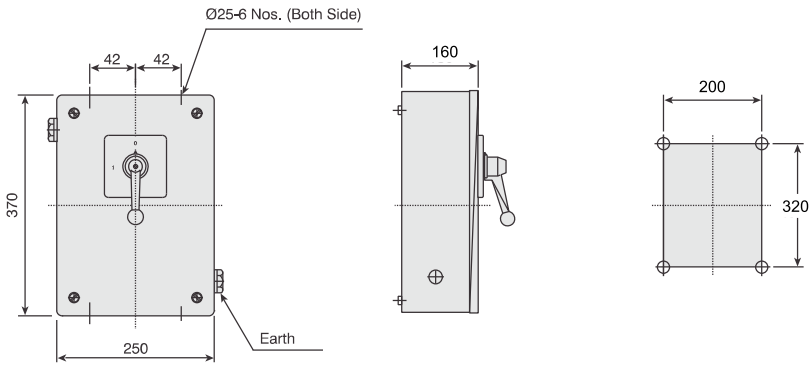

- Powder coated steel IP65 enclosure.
- Separate earthing provided.
- Interlock provided to remove cover only in 'OFF' position for safety.
- Colour : Yellow front plate and Red ball grip handle / grey front plate and Black ball grip handle.

Enclosure Changeover Switches

CHANGEOVER SWITCHES: KNOB/HANDLE AND MOUNTING OPTIONS

MOUNTING	LB225	LB232	LB240	LB263	LB4080	LB4100	LB4125
B13	PG, BG	PG, BG	PG, BG	PG, BG	-	-	-
MB34	RD	RD	RD	RD	RD	RD	RD
MB42	PG, BG	PG, BG	PG, BG	PG, BG	PG, BG	PG, BG	PG, BG
B21	BG, PG	BG, PG	BG, PG	BG, PG	PG, BG	BG, PG	BG, PG
SB31	BG, PG	BG, PG	BG, PG	BG, PG	-	-	-
SB31XL	-	-	-	-	BG, PG	BG, PG	BG, PG
B31L	RD, BG	RD, BG	RD, BG, PG	RD, BG, PG	-	-	-

The knobs/handles highlighted in blue are standard, others indicates possible options.

PRODUCT CODING

LOAD BREAK AND CHANGEOVER SWITCHES

LB	XXXX	XXXXX	XXXXX	XX	XX
Load Break Switch	**Switch Rating**	**Programme Code**	**Mounting Options**	**Knob Options**	**Colour**

EXAMPLE

LB Switches, 25A, 3P, 9 O'clock, 4 hole front mounting, yellow front plate, red flag knob	LB	225	31309	B13	FL	YR
LB Switches, 63A, 3P, 9 O'clock, 4 hole front mounting, with metal shaft, yellow front plate, red round knob	LB	263	31309	MB34	RD	YR
LB Switches 40A, 3P, 12 O'clock off in B31SM enclosure, grey front plate, black round knob	LB	240	31300	B31SM	RD	GB
LB Changeover Switch, 63A, 3P, metal enclosure with interlock, yellow front plate, red ball grip handle	LB	263	31153	SB31	BG	YR

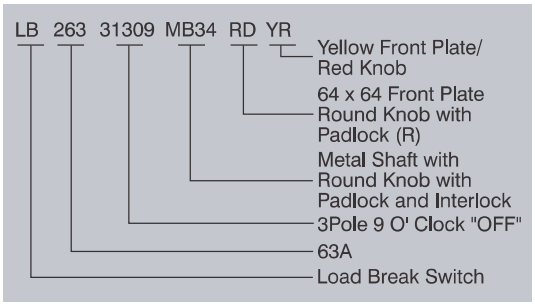

ACCESSORIES

ADD ON MAIN POLE (16A TO 125A)

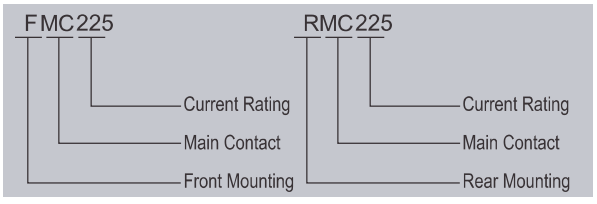

ADD ON NEUTRAL POLE (16A TO 125A)

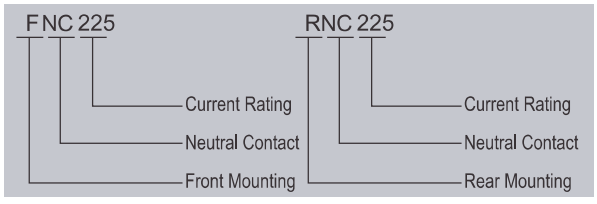

ADD ON AUXILIARY POLE (16A TO 125A)

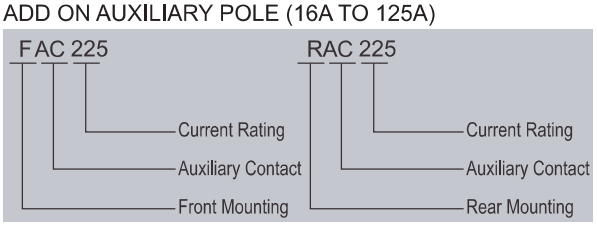

ADD ON 2NO(25A TO 125A)

FA 2NO	RA 2NO
Front Mounting 2NO	Rear Mounting 2NO



Switch with Roll Handle and
Short Handle, both Padlockable



Changeover Switch



Switch for Single Hole Mounting
with Padlockable Knob

FEATURES

Padlock and door interlocking facility.

Double break contacts, with ADD-ON Blocks.

IP 20 (Touch proof terminals) With shroud for protection.

RANGE

Rated up to 75HP for motor control and upto 125 Amps for switching.

Optional dia 22.5mm single hole, panel, base, DIN rail or enclosure mounting.

On Load Changeover Switches with various mounting options.

APPROVALS

Conform to IEC, UL & CB standards.

Carry CE & UL marks as applicable Factory ISO 9001 / 14000 / 18000 certified.



salzer