# Product data sheet
## Characteristics

# QOT2020
## Tandem mini circuit breaker, QO, 2 x 1 pole at 20A, 120/240 VAC, 10 kA, plug in mount

Product availability : Stock - Normally stocked in distribution facility

Price* : 58.00 USD



## Main

| | |
|---|---|
| Product | Miniature circuit-breaker |
| Range | QO |
| Current Rating | 20 A |
| Voltage Rating | 120/240 V AC |
| Mounting Type | Plug-in |
| Number of Poles | 1P |
| Circuit Breaker Type | Tandem |
| Ratings | HACR rated |
| Electrical Connection | Pressure plate |

## Complementary

| | |
|---|---|
| Interrupt Rating | 10 kA 120/240 V AC 50/60 Hz |
| Number of Panel Spaces | 1 |
| Wire Size | AWG 14...AWG 8 copper<br>AWG 12...AWG 8 aluminium |
| Tightening Torque | 44.25 lbf.in (5 N.m) 0.02…0.04 in² (10…25 mm²) AWG 8...AWG 2) |
| Height | 3.22 in (81.79 mm) |
| Depth | 2.91 in (73.91 mm) |
| Width | 0.75 in (19.05 mm) |

## Environment

| | |
|---|---|
| Certifications | UL Listed<br>CSA |
| Ambient Rating | 104 °F (40 °C) |

* Price is “List Price” and may be subject to a trade discount – check with your local distributor or retailer for actual price.

Disclaimer: This documentation is not intended as a substitute for and is not to be used for determining suitability or reliability of these products for specific user applications

## Ordering and shipping details

| | |
|---|---|
| Category | 00004 - QO,QOT 10-30A 1P;10-60A 2P |
| Discount Schedule | DE2A |
| GTIN | 00785901418085 |
| Package weight(Lbs) | 0.35 lb(US) (0.16 kg) |
| Returnability | Yes |
| Country of origin | MX |

## Packing Units

| | |
|---|---|
| Package 2 Weight | 3.36 lb(US) (1.524 kg) |
| Package 3 Weight | 34.95 lb(US) (15.853 kg) |

## Offer Sustainability

| | |
|---|---|
| Sustainable offer status | Green Premium product |
| REACh Regulation | REACh Declaration |
| REACh free of SVHC | Yes |
| EU RoHS Directive | Compliant<br>EU RoHS Declaration |
| Toxic heavy metal free | Yes |
| Mercury free | Yes |
| RoHS exemption information | Yes |
| China RoHS Regulation | China RoHS declaration<br>Pro-active China RoHS declaration (out of China RoHS legal scope) |
| Environmental Disclosure | Product Environmental Profile |
| Halogen content performance | Halogen free product |

## Contractual warranty

| | |
|---|---|
| Warranty | 18 months |

## Dimensions

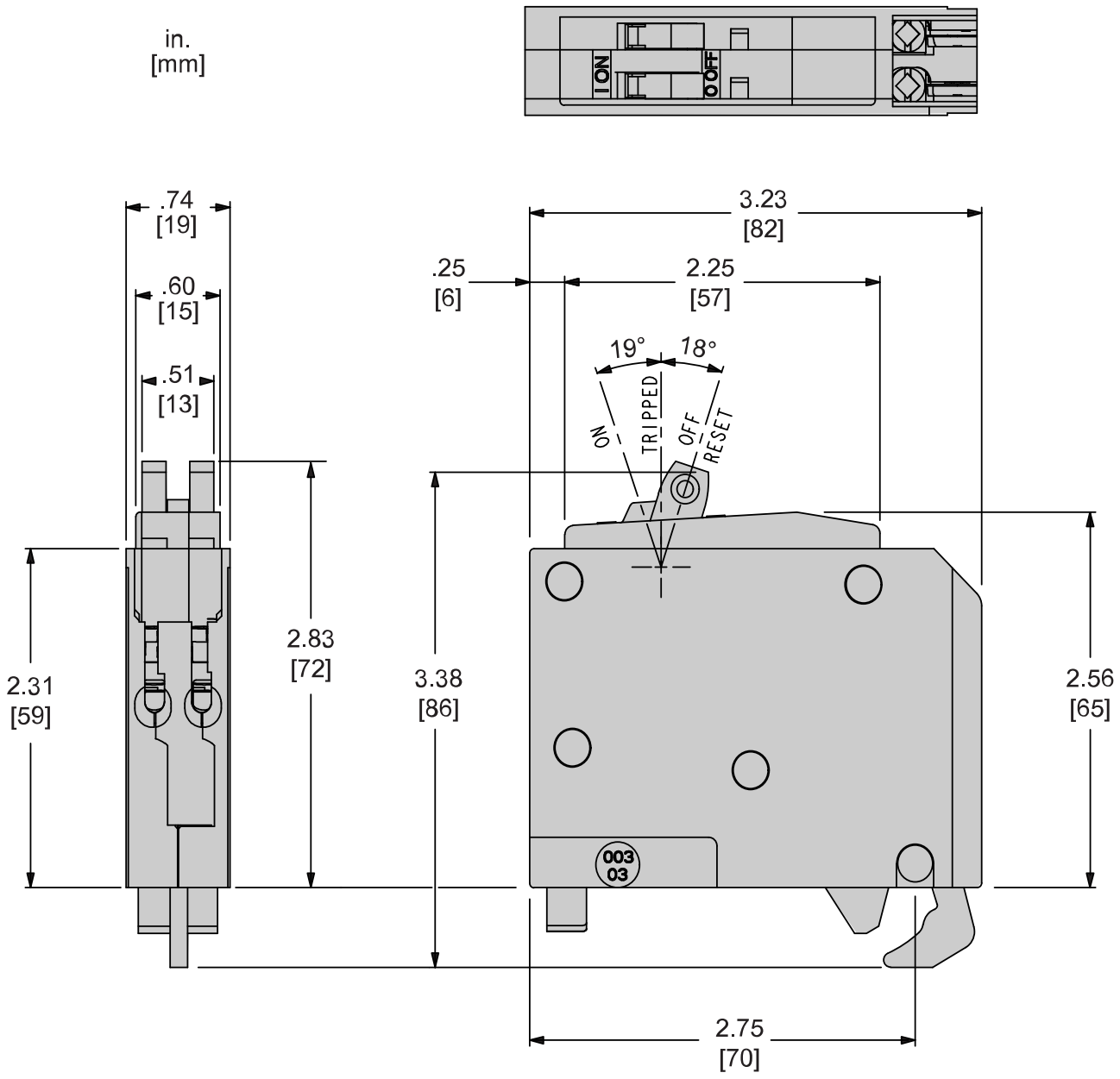
in.
[mm]
ON
OFF
.74
[19]
.60
[15]
.51
[13]
3.23
[82]
.25
[6]
2.25
[57]
19°
18°
ON
TRIPPED
OFF
RESET
2.31
[59]
2.83
[72]
3.38
[86]
2.56
[65]
003
03
2.75
[70]