Product datasheet

Specifications



contact block ZB2 - 1 NO contact - spring return

ZB2BE101C

Main

Range of product	Easy Harmony XB2
Product or component type	Complete body/contact assembly
Component name	ZB2
Electrical circuit type	Control circuit
Contact block application	Single speed
Contact block type	Single
Product compatibility	ZB2..C
Contacts type and composition	1 NO
Mounting of block	Front mounting
Sale per indivisible quantity	1
Device short name	XB2
Device presentation	Basic element
Body type	Body for control button
Contact operation	Slow-break

Complementary

Mechanical durability	3000000 cycles
Contact code designation	A600 AC-15, Ue = 240 V, Ie = 3 A conforming to IEC 947-5-1 appendix A A600 AC-15, Ue = 600 V, Ie = 1.2 A conforming to IEC 947-5-1 appendix A Q600 DC-13, Ue = 250 V, Ie = 0.27 A conforming to IEC 947-5-1 appendix A Q600 DC-13, Ue = 600 V, Ie = 0.1 A conforming to IEC 947-5-1 appendix A
[Ithe] conventional enclosed thermal current	10 A
[Ui] rated insulation voltage	600 V (pollution degree 3) conforming to IEC 60947-1
[Uimp] rated impulse withstand voltage	6 kV conforming to IEC 60947-1
Maximum resistance across terminals	25 MOhm
Operating force	3…5 N
Short-circuit protection	10 A fuse protection by cartridge fuse type gG (gl)
Rated operational power in W	40 W DC-13 for 1000000 cycles, operating rate <3600 cyc/h at 120 V, load factor = 0.5 conforming to IEC 60947-5-1 48 W DC-13 for 1000000 cycles, operating rate <3600 cyc/h at 48 V, load factor = 0.5 conforming to IEC 60947-5-1 65 W DC-13 for 1000000 cycles, operating rate <3600 cyc/h at 24 V, load factor = 0.5 conforming to IEC 60947-5-1
Terminals description ISO n°1	(13-14)NO
Net weight	0.015 kg

Disclaimer: This documentation is not intended as a substitute for and is not to be used for determining suitability or reliability of these products for specific user applications

Height	29 mm
Width	15 mm
Depth	24 mm
Connections - terminals	Screw clamps terminals
Fixing collar material	Zamak
Connections - terminals	Screw clamps terminals, 1 x 2.5 mm² with or without cable end Screw clamps terminals, 2 x 1.5 mm² with or without cable end
Contacts material	Silver alloy (Ag/Ni)
Contacts usage	Standard contacts
Connections - terminals	Screw clamp terminal, <= 2 x 1.5 mm² with and without cable ends Screw clamp terminal, <= 1 x 2.5 mm² with and without cable ends Screw clamp terminal, >= 1 x 0.5 mm² with and without cable ends Faston terminals, connection size: 6.3 mm
Electrical durability	1000000 cycles, AC-15, 3 A at 240 V, operating rate <3600 cyc/h, load factor: 0.5 conforming to IEC 60947-5-1 appendix C 1000000 cycles, DC-13, 0.27 A at 250 V, operating rate <3600 cyc/h, load factor: 0.5 conforming to IEC 60947-5-1 appendix C
Electrical reliability	Λ < 10exp(-6) at 5 V, 1 mA in clean environment conforming to IEC 60947-5-4 Λ < 10exp(-8) at 17 V, 5 mA in clean environment conforming to IEC 60947-5-4
[Ie] rated operational current	3 A at 240 V, AC-15, A600 conforming to IEC 60947-5-1 0.27 A at 250 V, DC-13, Q600 conforming to IEC 60947-5-1
Short-circuit protection	10 A gL fuse type gG conforming to IEC 60947-5-1
[Ith] conventional free air thermal current	10 A conforming to IEC 60947-5-1
Positive opening	Without
Operating travel	2.38 mm (NO changing electrical state) 5 mm (total travel)
Shape of screw head	Cross compatible with Philips no 1 screwdriver Cross compatible with pozidriv No 1 screwdriver Slotted compatible with flat Ø 4 mm screwdriver Slotted compatible with flat Ø 5.5 mm screwdriver
Protective treatment	TC/TH
customizable	No
Shock resistance	30 gn (duration = 18 ms) for half sine wave acceleration conforming to IEC 60068-2-27 50 gn (duration = 11 ms) for half sine wave acceleration conforming to IEC 60068-2-27
Tightening torque	0.8…1.0 N.m
Fixing mode	Fixing screw beneath head recommended torque: 0.8 N.m Fixing screw beneath head recommended torque: 1.0 N.m

Environment

Ambient air temperature for operation	-25…70 °C
Ambient air temperature for storage	-40…70 °C
Vibration resistance	5 gn (f= 2…500 Hz) conforming to IEC 60068-2-6
Electrical shock protection class	Class II conforming to IEC 61140
Product certifications	CE CCC

Standards	IEC 60947-1 IEC 60947-5-1 IEC 60947-5-4 GB/T 14048.1 GB/T 14048.5

Packing Units

Unit Type of Package 1	PCE
Number of Units in Package 1	1
Package 1 Height	3.000 cm
Package 1 Width	10.000 cm
Package 1 Length	10.200 cm
Package 1 Weight	15.000 g
Unit Type of Package 2	S03
Number of Units in Package 2	150
Package 2 Height	30.000 cm
Package 2 Width	30.000 cm
Package 2 Length	40.000 cm
Package 2 Weight	2.513 kg
Unit Type of Package 3	P06
Number of Units in Package 3	2400
Package 3 Height	75.000 cm
Package 3 Width	60.000 cm
Package 3 Length	80.000 cm
Package 3 Weight	48.708 kg

Environmental Data

Schneider Electric aims to achieve Net Zero status by 2050 through supply chain partnerships, lower impact materials, and circularity via our ongoing “Use Better, Use Longer, Use Again” campaign to extend product lifetimes and recyclability.

Environmental Data explained >

How we assess product sustainability >

Environmental footprint

Carbon footprint (kg.eq.CO2 per CR, Total Life cycle)	1
Environmental Disclosure	Product Environmental Profile

Use Better

Materials and Substances

Packaging without single use plastic	No
SCIP Number	9e63340a-2371-4381-8f9a-5fba0ff349a4

Use Again

Repack and remanufacture

Circularity Profile	No need of specific recycling operations
Take-back	No
WEEE	The product must be disposed on European Union markets following specific waste collection and never end up in rubbish bins

Dimensions Drawings

Dimensions

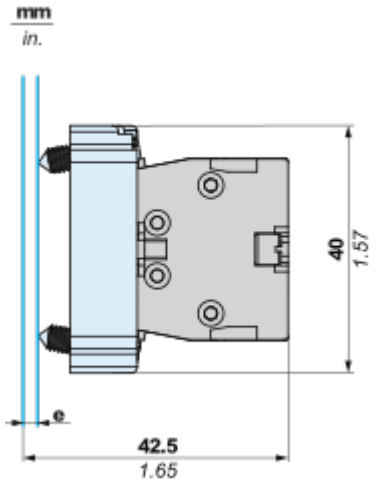

e: clamping thickness 1 to 6 mm / 0.04 to 0.24 in.

Technical Illustration

Dimensions

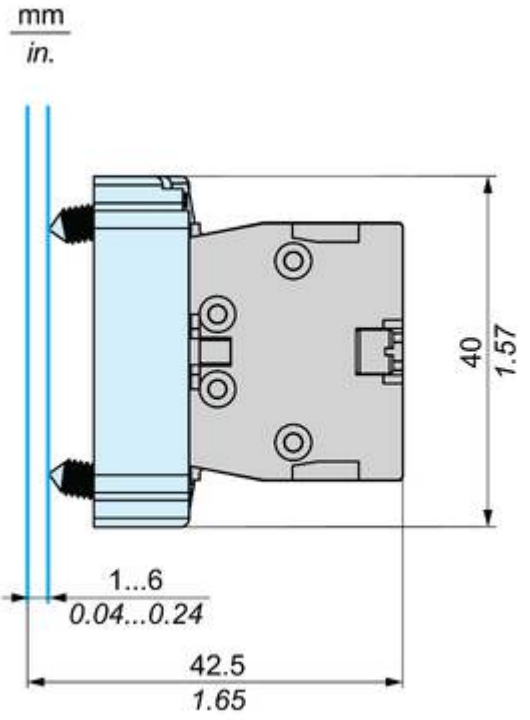

Offer Marketing Illustration

Product benefits / Features



Offer Marketing Illustration

Product benefits / Features



Image of product / Alternate images

Alternative







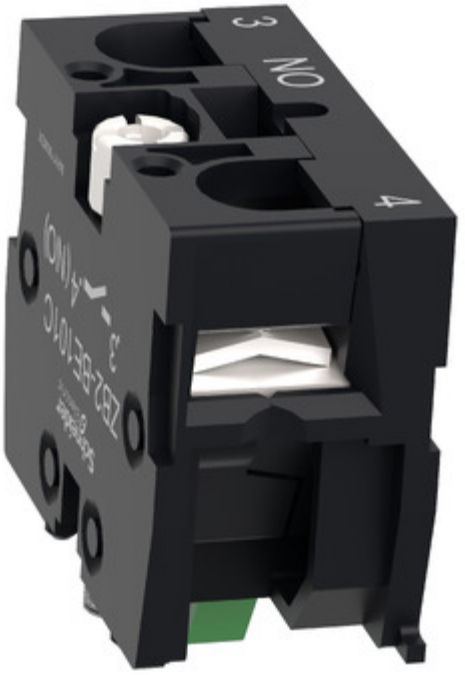
3
NO
4


4
NO
3


Schneider Electric
ZB2-BE101C
.3
.4 (NO)