SIEMENS

Data sheet 3VA4195-5ED34-0AA0



circuit breaker 3VA4 UL Frame 125 breaking capacity class M 35 kA @ 480 V 3-pole, line protection TM210, FTFM, In=15 A overload protection Ir=15 A permanently set short-circuit protection Ii=20 x In terminal connection

Model	
product brand name	SENTRON
product designation	Molded-case circuit breaker
product designation / according to UL file	MEAB
design of the product	System protection
design of the load switch / according to UL 489 / Heating, Air Conditioning, and Refrigeration circuit breaker (HACR Type)	Yes
design of the load switch / according to UL 489 / High-Intensity-Discharge circuit breaker (HID Type)	Yes
design of the load switch / according to UL 489 / Switching Duty circuit breaker (SWD Type)	Yes
design of the overcurrent release	TM210
protection function of the overcurrent release	LI
number of poles	3
General technical data	
operating voltage / at AC / rated value	600 V
power loss [W] / maximum	9.8 W
power loss [W] / for rated value of the current / at AC / in hot operating state / per pole	3.27 W
mechanical service life (operating cycles) / typical	15 000
electrical endurance (operating cycles) / at 480 V	8 000
electrical endurance (operating cycles) / at 600 V	4 000
product feature / for neutral conductors / upgradable/retrofittable / short-circuit and overload proof	No
ground-fault monitoring version	Without
product function	
● communication function	No
● other measurement function	No
Net Weight	0.743 kg
Current	
marking / according to UL 489 / 100%-rated breaker	No
operational current	
● at 40 °C	15 A
● at 45 °C	15 A
● at 50 °C	14 A
● at 55 °C	14 A
● at 60 °C	14 A
● at 65 °C	13 A
● at 70 °C	13 A
Switching capacity according to IEC 60947	
switching capacity class of the circuit breaker	M
design of short-circuit protection	For switching power values in DC networks, see the 3VA molded case circuit

Subject to change without notice
© Copyright Siemens

	breaker device manual; link to be found under Service & Support in the last chapter
Switching capacity according to UL 489	
current breaking capacity	
● at 240 V	85 kA
● at 480 Y/277 V	35 kA
● at 480 V	35 kA
● at 600 Y/347 V	18 kA
Adjustable parameters	
adjustable response value delay time (tr) / for L-tripping / with I2t characteristic	
● minimum	1 s
● maximum	1 s
product function / grounding protection	No
Mechanical Design	
product component	
● undervoltage release	No
● voltage trigger	No
● trip indicator	No
height [in]	5.09 in
height	129.4 mm
width [in]	3 in
type of connectable conductor cross-sections / of the round conductor terminal / stranded	1 x (14 AWG - 8 AWG)
width	76.2 mm
depth [in]	2.96 in
depth	75.1 mm
Connections	
arrangement of electrical connectors / for main current circuit	output side: circular conductor connection
type of electrical connection / for main current circuit	Infeed side: Low tab
design of the surface / of the connections / on the bottom of the switch (N, 2, 4, 6)	Tin
Auxiliary circuit	
number of CO contacts / for auxiliary contacts	0
Accessories	
product extension / optional / motor drive	No
Environmental conditions	
protection class IP / on the front	IP40
ambient temperature	
● during operation / minimum	-25 °C
● during operation / maximum	70 °C
● during storage / minimum	-40 °C
● during storage / maximum	80 °C

Approvals / Certificates

General Product Approval			EMV	other
UL	UL	Miscellaneous	EAC, RCM	Confirmation

other		Environment
Miscellaneous	Miscellaneous	Environmental Confirmations

Further information

Information on the packaging
https://support.industry.siemens.com/cs/ww/en/view/109813875
Information- and Downloadcenter (Catalogs, Brochures,…)

Subject to change without notice
© Copyright Siemens

http://www.siemens.com/lowvoltage/catalogs

Industry Mall (Online ordering system)
https://mall.industry.siemens.com/mall/en/en/Catalog/product?mlfb=3VA4195-5ED34-0AA0

Service&Support (Manuals, Certificates, Characteristics, FAQs,...)
https://support.industry.siemens.com/cs/ww/en/ps/3VA4195-5ED34-0AA0

Image database (product images, 2D dimension drawings, 3D models, device circuit diagrams, ...)
http://www.automation.siemens.com/bilddb/cax_en.aspx?mlfb=3VA4195-5ED34-0AA0

CAx-Online-Generator
http://www.siemens.com/cax

Tender specifications
http://www.siemens.com/specifications

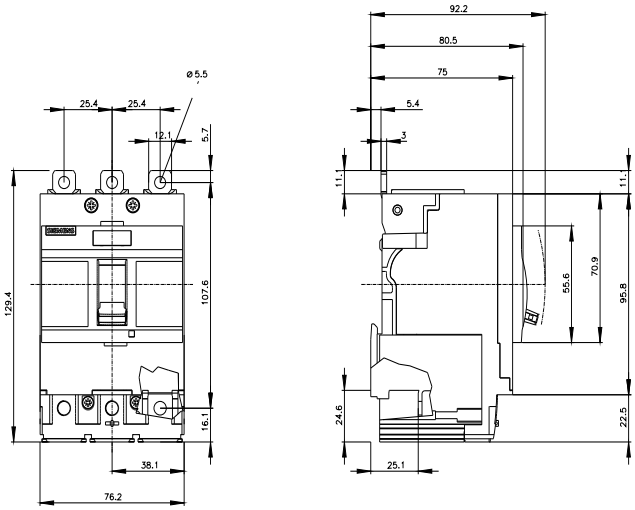

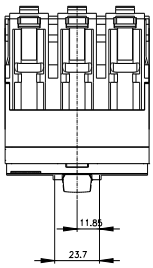

Subject to change without notice
© Copyright Siemens

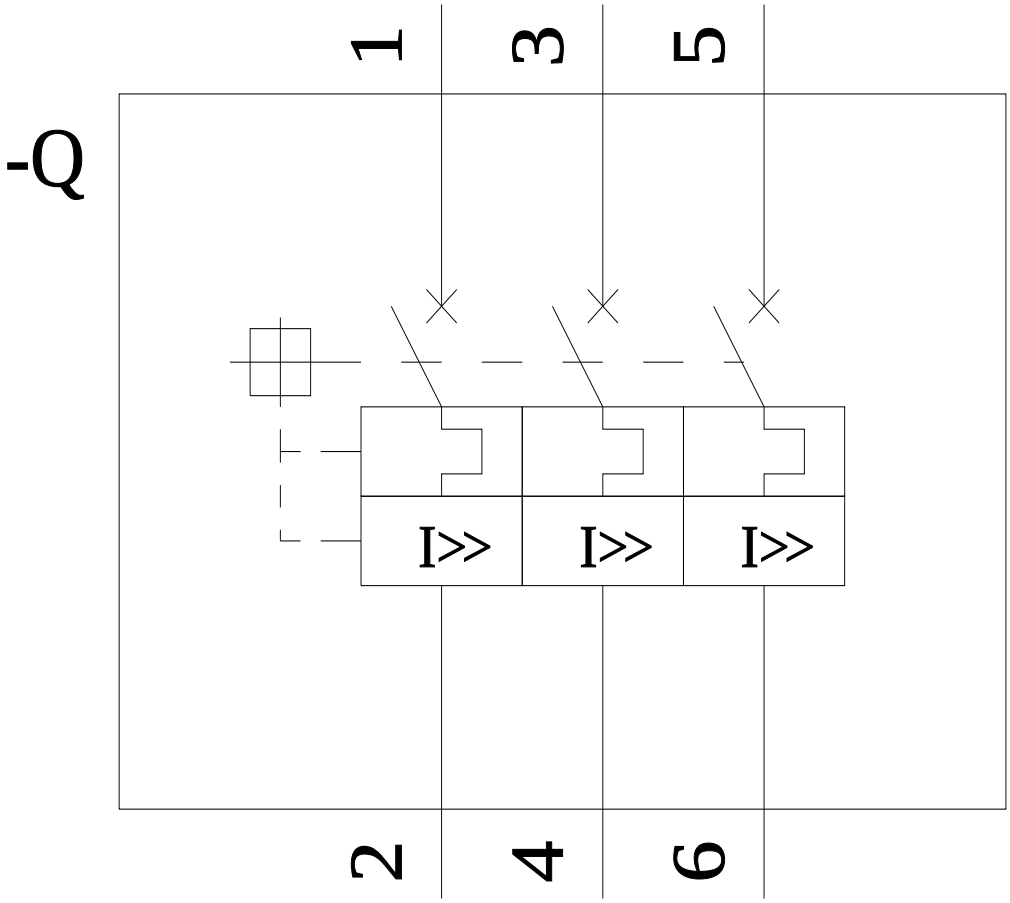

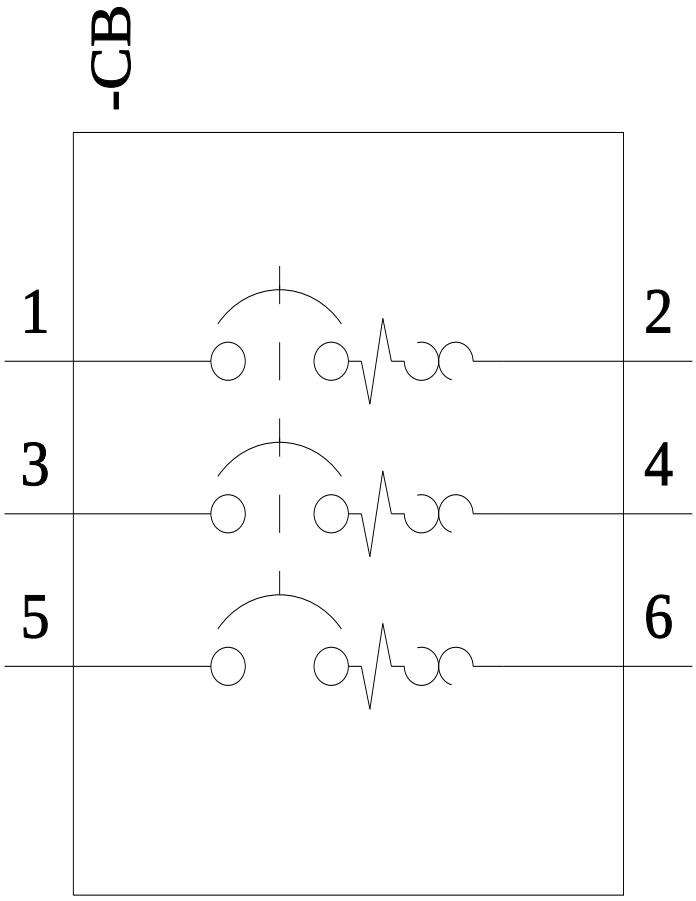

last modified: 2/11/2025

Subject to change without notice
© Copyright Siemens

Subject to change without notice
© Copyright Siemens