YR-SPOKE-4-90-4IN-SQ Tenon Adapter for 4 Inch Square Poles with 4 Horizontal 90 Degree Tenons









Features:

- Galvanized
- Corrosion resistant powder coating
- Compact size & lower freight cost

Product Size

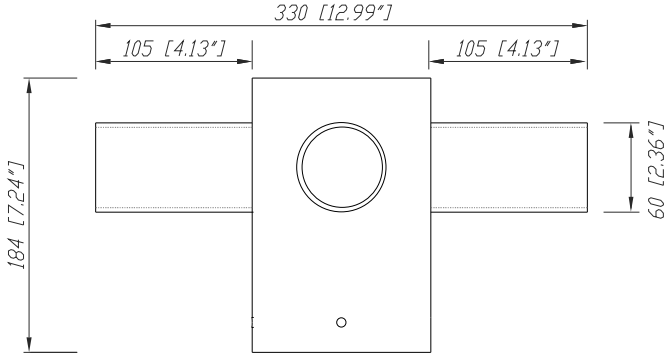

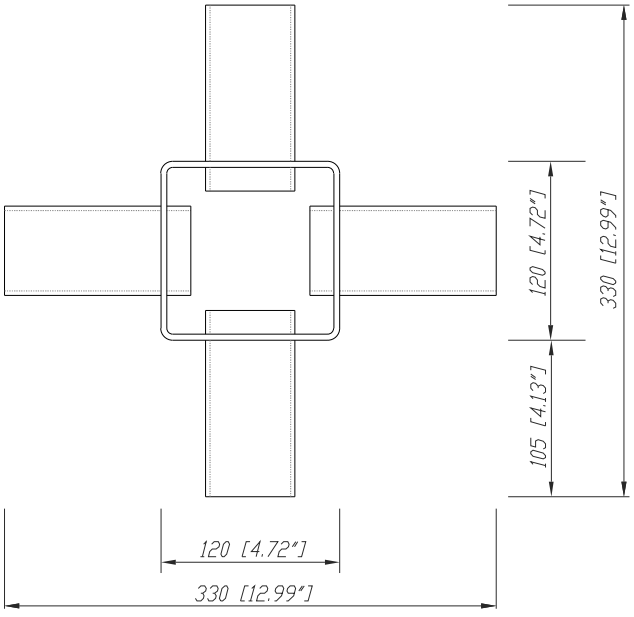

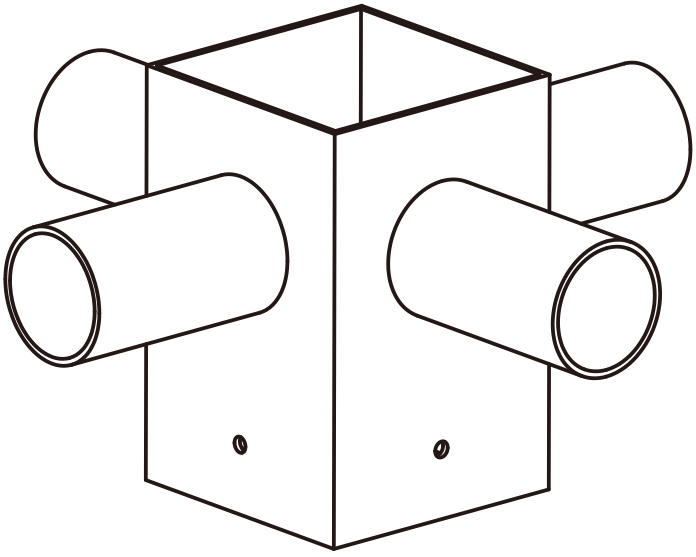

Installation

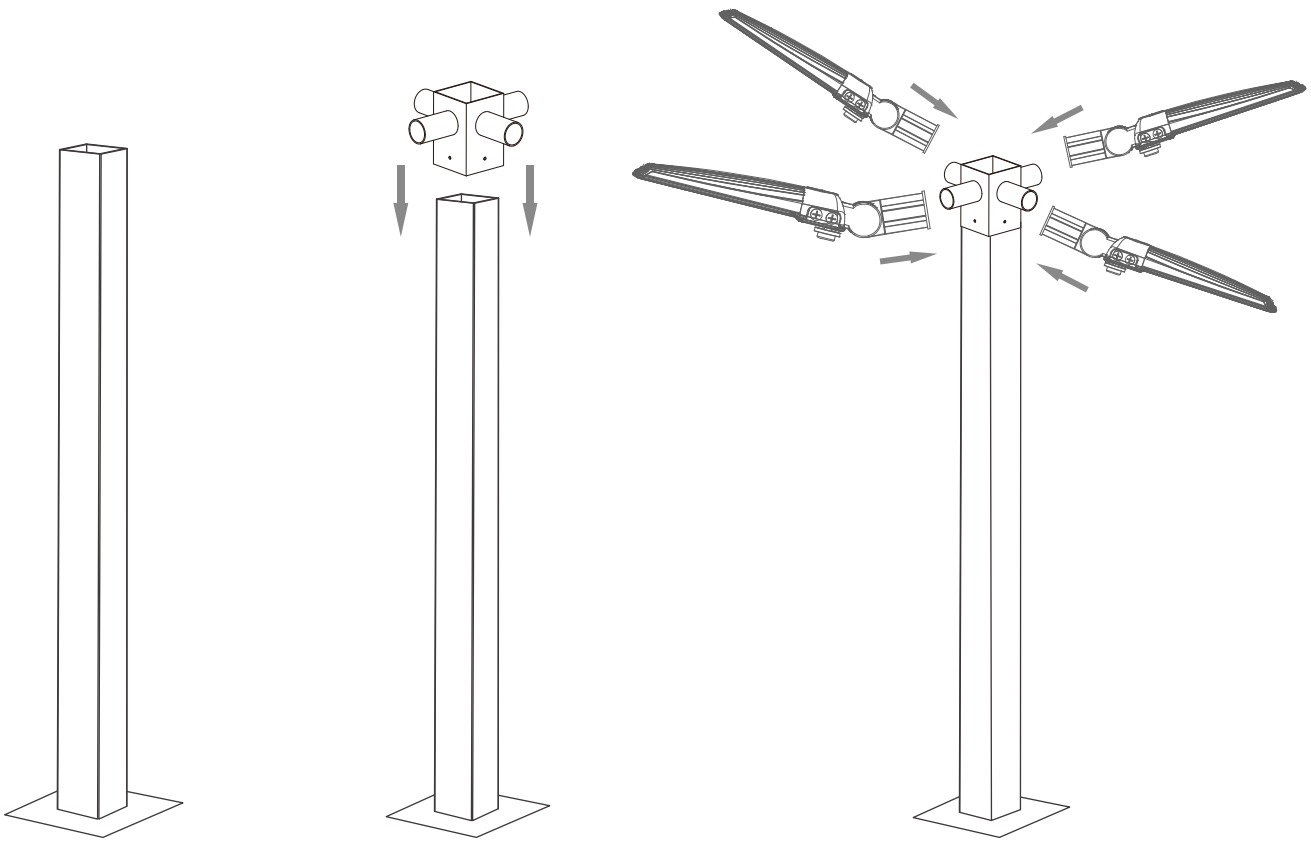

Applications

